INSTALLATION & MAINTENANCE MANUAL

HIGH-SPEED CONVECTION OVENS SPRIZ

REV.000

ORIGINAL INSTRUCTIONS: IT

52LIB00280

SUMMARY

SAFETY WARNINGS 4
INSTALLER INSTRUCTIONS 6
2.1 DATA LABEL 6
2.2 EQUIPMENT TRANSPORT 7
2.3 PLACEMENT 7
2.3.1 SUPPORT OVER A TABLE / WARDROBE 9
2.3.2 SUPPORT ON TOP OF A LEAVENING DEVICE 9
2.3.3 SUPPORT OVER AN OVEN OR BLAST CHILLER TEMPERATURE 9
2.3.4 SUPPORT ON A STAND 10
ELECTRICAL CONNECTION 10
3.2 REPLACEMENT OF THE POWER CORD 11
DISCHARGE OF FUMES 11
SAFETY RULES FOR THE USER 11
5.1 WARNINGS FOR THE FIRST IGNITION 11
5.1.1 FILM REMOVAL 12
5.2 WARNINGS FOR THE COOKING 12
I/O TEST 13
CLEANING AND MAINTENANCE 14
7.1 GENERAL WARNINGS FOR CLEANING 14
7.2 CLEANING OF THE DOOR AND INTERIOR GLASS 14
7.3 ORDINARY AND MANUAL CLEANING OF THE COOKING 14
7.4 CLEANING OF EXTERNAL SURFACES 15
WARNINGS AND ALARMS 16
8.1 CAMERA PROBE FAILURE 16
8.2 SAFETY THERMOSTAT 16
8.3 LACK OF TENSION 17
PREVENTIVE MAINTENANCE 18
CAUSES OF COMMON PROBLEMS 19
10.1 SCHEDULED MAINTENANCE SERVICE (ANNUALLY) 19
PERIODIC ACTIVITIES TO BE BORNE BY THE USER 20
PERIOD OF INACTIVITY 20

DISPOSAL AT END OF LIFE.....21
13.1 EQUIPMENT DISPOSAL 21
13.2 INFORMATION ON DISPOSAL (UNION EUROPEAN) 21

SAFETY WARNINGS

Failure to comply with the following guide may cause damage and injury even fatal, forfeits the warranty and relieves the Manufacturer of any liability. Before installation, use and maintenance of the equipment, please read this booklet carefully and keep it carefully for any future consultation by the various operators. If you do not understand all the contents of this booklet, please contact the Manufacturer. In case of loss or deterioration of the documentation, request the Manufacturer to send the replacement one.

Danger! Danger! Immediate danger or dangerous situation that could cause injury or death.

Read the instruction manual.

Grounding symbol.

Equivalent symbol.

- Before use and maintenance of the equipment carefully read this booklet and keep it carefully for any further future consultation by the various operators. If some parts are not understandable, please contact the Builder.
- In case of transfer of the equipment, have the new user have this booklet.
- Use, cleaning and maintenance other than those indicated in this booklet are considered improper and may cause damage, injury or fatal accidents, render the warranty void and relieve the Builder of any liability.
- Cleaning and maintenance intended for the user must not be carried out by children without supervision.
- Children must be supervised to ensure that they do not play with the appliance.

- This appliance must only be used for the cooking of food in professional kitchens by qualified personnel: any other use does not conform to the intended use and therefore dangerous.
- It is recommended to monitor the equipment throughout its operation.
- The apparatus may be used by children aged 8 years or more and by persons with reduced physical, sensory or mental capacity, or without experience or knowledge, provided that they are supervised or after instructions concerning the safe use of the apparatus and the understanding of the hazards inherent in it. Children should not play with the brace. Cleaning and maintenance to be carried out by the user and shall not be carried out by children without surveillance.
- If the equipment does not work or you notice functional or structural anomalies, disconnect it from the power and water supply and contact a Service Center Authorised by the Builder without attempting to repair it yourself. For a possible repair request the use of original spare parts. Failure to comply with this requirement renders the Warranty void.
- It is recommended, to ensure that the appliance is in perfect conditions of use and safety, that it be subject to maintenance and control by an authorised service centre at least once a year.
- Do not block any air intake on the equipment. The user must only carry out routine cleaning operations. For inspection, extraordinary maintenance and replacement of defective components, please contact an Authorised Service Centre to send a specialised and adequately trained technician.
- Before carrying out any cleaning, it is necessary to disconnect the power supply of the appliance and wear appropriate personal protective equipment (e.g. gloves, etc.).
- If the appliance is fitted with wheels or is positioned above a piece of furniture with wheels, its freedom of movement must be limited by means of anti-movement devices (e.g. chains) so that during movement it cannot in any way damage the electrical cables, water and drain pipes.

INSTALLER INSTRUCTIONS

- All installation and extraordinary maintenance operations must be carried out only by qualified personnel authorised by the Builder, in accordance with the regulations in force in the country of use and respecting the regulations relating to installations and safety at work.
- Before installing the equipment, check the compliance of the plants with the regulations in force in the country of use and with the information on the technical data plate.
- The equipment shall be disconnected from the power supply before any installation or maintenance is carried out.
- Interventions, tampering or changes not expressly authorised and that do not comply with the provisions of this manual will discontinue the warranty. Installation or maintenance other than those indicated in this booklet may cause injury or fatal accidents to the installer and the user and cause damage to the facilities of the installation site.
- Replacement of the power cord shall only be carried out by a qualified and authorised technician. The cable may only be replaced by one of similar characteristics: the technical data plate always indicates the type of cable to be used and its section. The grounding cable must always be green yellow.

2.1 DATA LABEL

The technical data plate provides important technical information that is essential in case of a request for intervention for a maintenance or a repair of the equipment: it is therefore recommended not to remove, damage or modify it.

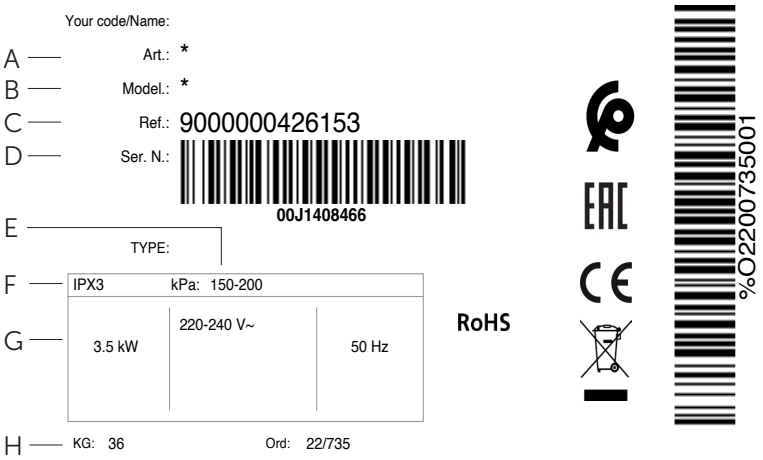

A - ARTICLE
B - MODEL
C - REFERENCE
D - SERIAL NUMBER
E - OPERATING PRESSURE
F - DEGREE OF PROTECTION
G - ELECTRICAL DATA
H - WEIGHT OF EQUIPMENT

2.2 EQUIPMENT TRANSPORT

Wearing personal protective equipment, bring the equipment into the installation room using a forklift truck. In the case of trolley ovens, insert the forks from the front side taking care not to damage the carriage lanes and the exhaust pipe located at the bottom of the furnace

ATTENTION!

Equipment must never be overturned, or upside down!

During the handling is forbidden the transit or the permanence of not employed persons near the working area. The packaging material, as potentially dangerous, must be kept out of reach of children or animals and properly disposed of in accordance with local regulations.

2.3 PLACEMENT

When choosing the positioning room, take into account that the equipment must be easily movable for any extraordinary maintenance: pay attention that any masonry works after installation (e.g. building walls, replacing doors with narrower ones, renovations, etc...) does not hinder movement.

The positioning room shall:

- Be well ventilated and not exposed to atmospheric agents;
- Have a temperature between +5 and +45 ºF (+41 ºF and +113 ºF) and humidity below 70%;
- Have a floor without roughness, perfectly leveled and supporting the equipment at full load;
- To comply with the current regulations in terms of safety at work and on plants;
- Be dedicated to the preparation of food;

It is recommended to install the equipment:

- Under a fume hood of adequate power (read the section on fume exhaust carefully);
- So that you have access to the connections;
- So that the equipment door can be fully opened.

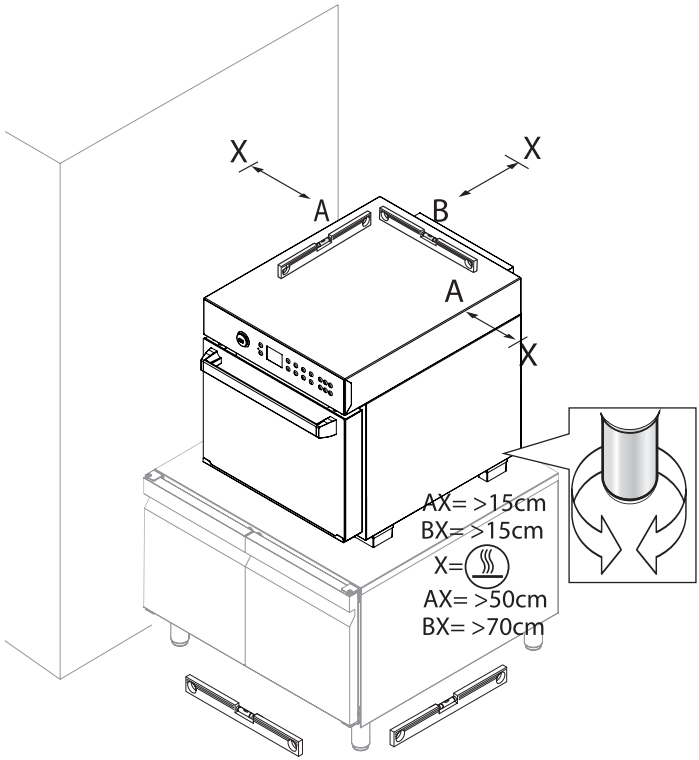

IT IS NOT RECOMMENDED TO PLACE NEAR OTHER EQUIPMENT THAT REACHES HIGH TEMPERATURES.

In case there is a need to provide a space of at least 50 cm side and 70cm back from these or interpose an insulating wall.

FOR SAFETY REASONS, DO NOT PLACE THE HIGHEST PAN AT A HEIGHT OF MORE THAN 160 CM.

If this is necessary, the "burn hazard" adhesive provided with the equipment must be applied at the indicated height.

DO NOT PLACE THE EQUIPMENT IN THE VICINITY OF FLAMMABLE AND/OR POTENTIALLY EXPLOSIVE MATERIALS OR CONTAINERS (E.G. PARTITIONS, GAS CYLINDERS, ETC.) DUE TO FIRE HAZARDS.

Cover any walls with non-flammable thermal material.

THE EQUIPMENT IS NOT SUITABLE FOR RECESSED INSTALLATION.

DIRECT GROUND SUPPORT OF THE EQUIPMENT IS NOT ALLOWED.

Supports are available from the Manufacturer and/or Retailer to be placed under it to obtain the desired height from the ground. Do not install equipment without pins.

The equipment can be positioned:

- Above a table or a cabinet made of non-flammable material;
- On top of a compatible leavening agent;
- On top of a compatible furnace or a compatible blast chiller;
- Above a structure of the Builder (stand).

2.3.1 SUPPORT OVER A TABLE / WARDROBE

If the equipment is positioned above a work table or a neutral cabinet, the latter must be perfectly level and stable, must support the equipment at full load, and the support surface must be fireproof and resistant to high temperatures. If necessary, act on the feet of the equipment to adjust the setting.

2.3.2 SUPPORT ON TOP OF A LEAVENING DEVICE

If the equipment is placed on top of a leavening device of the same series, it is sufficient to place it on top of the latter, making sure that the feet are stable and fit into the pins of the lower structure.

2.3.3 SUPPORT OVER AN OVEN OR BLAST CHILLER TEMPERATURE

If the equipment is positioned above furnaces or blast chillers of the same series, it is mandatory to mount the overlap kit to be requested from the manufacturer, then insert the base of the oven feet into the pins of the lower equipment. For the assembly instructions of the overlay kit refer to the sheet contained in the packaging of the same.

2.3.4 SUPPORT ON A STAND

If the equipment is positioned above a stand, insert the base of its feet into the pins of the lower structure. You can always complete your composition, adding or replacing accessories and complementary equipment, in this way you can meet every need for cooking or space. Visit our website or contact us for any further information.

ELECTRICAL CONNECTION

ATTENTION!

Before proceeding with the electrical connection, read carefully the safety warnings in the first pages of this manual and always compare the system data with those shown in the technical data plate.

The connection to the power supply must comply with the regulations in force in the country of installation of the equipment and must be carried out by qualified personnel and authorized by the manufacturer. Failure to comply with these rules may cause damage and injury, forfeits the warranty and relieves the Manufacturer of any liability.

When the appliance is in operation, the value of the supply voltage must not differ by +/- 10% of the value reported in the technical data.

The illustrated connection and the colors of the cables are indicative, please refer ONLY to the diagram shown on the equipment.
For the direct connection to the power supply, it is necessary to interpolate between the equipment and the network itself, a device, sized according to the load, which ensures disconnection and whose contacts have an opening distance allowing complete disconnection under the conditions of voltage category III. Proper ground connection is required and the ground cable shall not be interrupted in any way case.

When several devices are present in the same room, it is mandatory to provide a equipotential connection using the appropriate clamp marked by the symbol located in the lower back of the device. This clamp allows you to connect a ground cable according to current legal requirements. On the equipment there is a sticker indicating how to connect to the terminal block according to the type of voltage available.

3.2 REPLACEMENT OF THE POWER CORD

This operation must be carried out only by a qualified and authorized technician. The cable can only be replaced with one of similar features: the technical data plate always indicates the type of cable to be used and its section. The grounding cable must always be yellow green.

DISCHARGE of FUMES

During cooking, hot fumes and smells are produced that are evacuated through the fumes exhaust chimney located at the rear/top of the appliance (the temperature and humidity of the fumes depend on the cooking parameters set on the oven and the type and quantity of food placed in the oven). The fumes escaping from the chimney can be extracted outside the room where the oven is installed or they can be condensed using the optionally available condensation hood (the manufacturer recommends installing its own hoods). Make sure that there are no objects and/or materials above the flue outlet that could obstruct the flow of fumes or be damaged by the temperature or the fumes themselves.

SAFETY RULES for the USER

5.1 WARNINGS FOR THE FIRST IGNITION

The use of its equipment is simple and intuitive. In the following pages we will guide you step by step in the knowledge of the equipment: this will give you the certainty of getting results that always meet your expectations and will ensure optimal performance and long life of your equipment.

- At the first use of the equipment, thoroughly clean the interior of the room by carrying out a wash.
- Before use, make sure that there are no non-compliant objects (instruction booklets, plastic bags or anything else) inside the equipment chamber.
- Make sure that the exhaust fumes are free from obstructions and there are no flammable materials in its vicinity.

5.1.1 FILM REMOVAL

Remove all protective film from the equipment, avoiding the use of abrasive/aggressive substances or metal objects (e.g. scrapers). If adhesive residue remains, wipe with a soft cloth soaked in oily detergent, suitable for non-aggressive or abrasive stainless steel surfaces. Avoid using scrapers, abrasive tools or cutting edges.

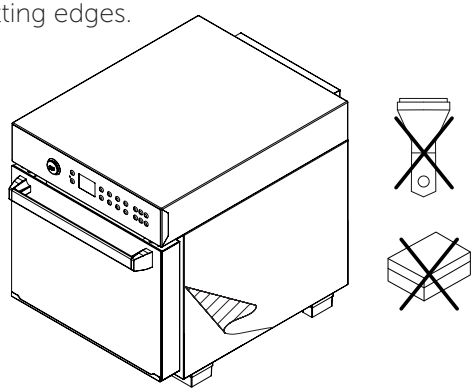

5.2 WARNINGS FOR THE COOKING

- Be careful to open the door when the oven is hot.
- Avoid salting food in the cooking chamber. If not avoidable, clean the equipment as soon as possible.
- Avoid superimposing the food or overloading the trays (maximum 4 kg per pan).
- For best results, avoid opening the door during cooking.
- To handle containers, accessories and other items inside the cooking chamber, always wear protective thermal clothing (PPE) suitable for the use in question (e.g. thermal gloves).
- During cooking and until cooling, the outer and inner parts of the equipment may be very hot (temperature greater than 60 ºC/ 140 ºF). To avoid the risk of burns, it is advisable not to touch the areas marked with this symbol.
- Be careful when extracting trays from the appliance chamber, especially if they contain liquids.
- Do not use highly flammable food or liquids during cooking (e.g. alcohol).
- Make sure that the tray holder structures inside the cooking chamber are well locked to the walls otherwise the trays containing hot food or liquids may fall out causing burns.
- Always keep the cooking chamber clean, carrying out a daily cleaning: fats or food residues if not removed from its interior could catch fire!
- Use the equipment with an ambient temperature between +5 and +45 ºC (+41 ºF and +113 ºF).

I/O TEST

Access to the I/O test is only enabled to the authorised technical service via a dedicated password. Uninformed I/O test can lead to machine malfunction. Inside the dedicated screen, all relays and inputs used are indicated.

By pressing the keys as shown in the image below, the relative relays are activated:

- RL1 = Technical compartment cooling relay test
- RL6 = Test relays resistors
- RL9 = Led relay test
- PR1 = Displaying room probe temperature
- PR2 = Temperature display probe heart
- BRD = Displaying temperature probe board
- DI4 = Micro port test
- DIHV = Safety thermostat test

INVERTER: Pressing the button will access the inverter control screen. To activate the inverter, adjust the speed using the and buttons. Then, use the and buttons to set the desired direction of rotation.

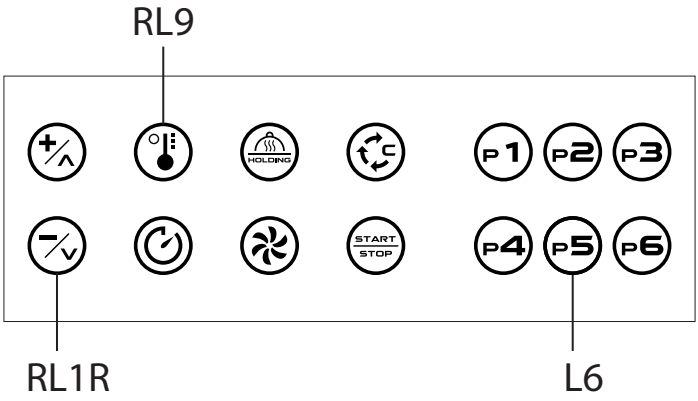

CLEANING and MAINTENANCE

7.1 GENERAL WARNINGS FOR CLEANING

- Before carrying out any cleaning operation, it is necessary to disconnect the power supply of the appliance and to wear appropriate personal protective equipment (e.g. gloves, etc...).
- The user shall only carry out routine cleaning operations. For inspection, maintenance and replacement of defective components contact an Authorized Service Center to send a specialized and properly trained technician.
- The Manufacturer does not recognize in the warranty damages resulting from maintenance failure or improper cleaning (e.g. use of unsuitable detergents).
- Before any cleaning, wait until the cooking chamber is cold (temperature not higher than 70 ºC).

For cleaning any part of the equipment or accessories DO NOT use:

- Abrasive or powdered detergents;
- Aggressive or corrosive detergents (e.g. hydrochloric/muriatic or sulphuric acid, caustic soda, etc...). Attention! Do not use such substances even to clean the sub-structure / the floor under the equipment;
- Abrasive or pointed tools (e.g. abrasive sponges, scrapers, steel brushes, etc...);
- Steam or pressure water jets.

7.2 CLEANING OF THE DOOR AND INTERIOR GLASS

To clean the glass inside the door, wait until the oven has completely cooled. The inner crystal can be opened for easy cleaning. Use a soft cloth just moistened of a neutral product, specific for crystals, following the instructions of the manufacturer of the detergent.

7.3 ORDINARY AND MANUAL CLEANING OF THE COOKING

At the end of a working day, it is necessary to clean the equipment, both for hygienic reasons and to avoid malfunctions.
The furnace must never be cleaned with direct or high pressure water jets. Similarly, iron cleaning pads, brushes or common steel scrapers should not be used to clean the appliance.

ATTENTION!

Any grease and food residues in the cooking chamber may catch fire while using the oven, so it is advisable to remove them promptly.

- Wait for the cooking chamber to cool.
- Remove the side grids that hold the baking pans.
- Remove any residues that can be removed manually and put the removable parts in the dishwasher.
- Clean the cooking chamber with warm soapy water.
- Subsequently, all affected surfaces should be thoroughly rinsed, taking care not to leave any residue of detergent.
- To clean the outside of the oven, use a damp cloth and a mild detergent.

To properly perform manual cleaning, follow these steps:

- Turn on the appliance and set the temperature to 176 ºC F (80 ºC).
- Leave it on for 10 minutes (with steam function, for preset ovens).
- Turn off the appliance and let it cool.
- Remove the side tray holders.
- Spray the detergent all over the inside of the oven and wait 10 minutes.
- Rinse the cooking chamber thoroughly at the end of the cleaning cycle.

It is strictly forbidden to wash the cooking chamber at temperatures above 70 ºC (158 ºF). Danger of sunburn.

7.4 CLEANING OF EXTERNAL SURFACES

The daily cleaning of the furnace baking chamber coating must be carried out with a non-abrasive detergent to ensure its proper functioning.

Use plastic bristles or a sponge soaked in vinegar and hot water in case of dry residues.
Use only a damp cloth with hot water or products suitable for cleaning stainless steel. Do not use acid or ammonia products.

ATTENTION!

It is recommended never to clean the appliance with water jets or steam under pressure.

WARNINGS and ALARMS

8.1 CAMERA PROBE FAILURE

This alarm appears if the probe turns out:

- Shorted
- Interrupted
- Out of measurement range

This alarm is automatically reset, then, removing the cause of the fault, the alarm resets automatically. This alarm is a serious alarm that interrupts any cooking process in progress. The buzzer plays continuously, and can be switched off by pressing any key.
With the ON/OFF button you can exit the error screen, but if the alarm conditions are not resolved, the next attempt to perform a firing, the alarm screen reappears and the buzzer resumes to sound.

8.2 SAFETY THERMOSTAT

This alarm appears if the maximum operating temperature of the equipment is exceeded. This is a manual reset alarm, the thermostat can be reset by pressing the red button on the same. Check that the cooling fan filters are clean and that the installation distances have been respected.

To reset the thermostat:

Remove the thermostat cap on the back of the oven.
Open the door and wait for the oven to cool.
Press the red button to reset it.
Contact a specialist technician (Customer Service) if the problem persists.

ATTENTION!

If the alarm repeats several times, wait for technical intervention before proceeding to further manual reset to avoid damaging the equipment.

8.3 LACK OF TENSION

If there is a lack of tension, the machine proceeds with the verification of any cooking. The P207 manages the voltage block.

- In the case of cooking cycles or leavening if the blackout remains for less than 1 minute, when the voltage returns, the cycle resumes from where it was interrupted but an alarm is generated.
- If the value of 1 minute is exceeded, the cycle does not start automatically and an HACCP alarm is generated for critical time (in the HACCP log the alarm code 320 will be indicated to indicate recovery from power fail).

PREVENTIVE MAINTENANCE

The furnace performs analyses on some relevant parameters to assess the status of the components and warn about the need to perform predictive maintenance of the equipment, in order to guarantee the customer the highest standard of performance and reliability. When certain thresholds are exceeded, a non-blocking warning will appear on the display to indicate the need to perform maintenance on the affected component.

The alert will appear:

- Each ignition of the oven, for the first week after the threshold has been exceeded;
- At each end of cooking, after the first week of exceeding the threshold. The warning can be hidden by pressing the ON/OFF button.

Predictive Maintenance Alert List:

- Limit safety thermostat interventions
- Limit hours above 90 °C (general maintenance)

Upon the appearance of the notice, the customer is invited to contact the after-sales service to verify the status of the components and their maintenance or possible replacement.

CAUSES of COMMON PROBLEMS

If the appliance has a malfunction, disconnect it from the mains and turn off the water. Before calling customer service, check the table below.

PROBLEM	CAUSE	RESOLUTION
At START the equipment does not start	Door is open	Check that the door is closed.
	Door micro-switch stays open also with closed door	Contact a specialized technician for part check or replacement (after sales support))
The equipment does not cook evenly	Fans no longer reverse rotation direction	Contact a specialized technician for part check or replacement (after sales support)
	One of the fans is not working	
	One of the heating elements is not working	
	Door gasket is not properly positioned	Correctly reposition the door seal to the appropriate location.
The equipment is completely off	Lack of power supply	Restore supply voltage
	Connection to power supply is not correct	Check the connection to the power line according to technical label.
	Safety thermostat triggered	Contact a specialized technician for part check or replacement (after sales support)
With the door closed, water comes out of the frontal gasket	Gasket is dirty	Clean the gasket with a damp cloth.
	Damaged gasket	Contact a specialized technician for part check or replacement (after sales support)
	Problem with door closing mechanism	
Fan stops during operation	Motor safety thermostat triggered	Turn off the equipment and wait for the thermal protection of the engine to close automatically. Check if installation comply with instructions in the manual. If this happens again, contact a specialized technician for part check or replacement (after sales support).
	Motor capacitor failed	Contact a specialized technician for part check or replacement (after sales support).
Error message digital ovens: ERR/Er1	Camera probe malfunction	Contact a specialist repair technician (Customer Service).

10.1 SCHEDULED MAINTENANCE SERVICE (ANNUALLY)

For the annual maintenance of the appliance it is advisable to contact the dealer to send a specialized technician.

PERIODIC ACTIVITIES to BE BORNE by the USER

The table below shows general maintenance that can be performed periodically by the user. Failure to comply with these procedures may result in malfunction or failure of the appliance.

	FREQUENCY OF OPERATIONS			
DESCRIPTION	Daily	Weekly	Monthly	Annual
General visual inspection	X			
Cleaning of the cooking chamber	X			
Cleaning of water inlet filter		X		
Check of softener operation			X	
Cleaning of the electrical components				X
Check of the electrical clamps				X
General performance check		X		
Cooling filter cleaning			X	

PERIOD of INACTIVITY

During periods of inactivity, disconnect the electricity and water supply. Protect the outer steel parts of the equipment by passing them with a soft cloth just soaked in petroleum jelly oil. Leave the door ajar to ensure proper air exchange.

When reset, before use:

- Carry out a thorough cleaning of the equipment and accessories;
- Reconnect the equipment to the power supply, water;
- Check the equipment before re-use;

In order to ensure that the appliance is in perfect condition for use and safety, it is recommended that it is maintained and checked at least once a year by an authorised service centre.

DISPOSAL at END of LIFE

To avoid any unauthorized use and the risks associated with it before disposing of the equipment:

- Make sure that it is no longer possible to use it: for this purpose, the power cord must be cut or removed (when the equipment is disconnected from the mains).
- Make sure that no child is accidentally trapped inside the cooking chamber for play, to this end block the opening of the door (for example with adhesive tape or fasteners).

13.1 EQUIPMENT DISPOSAL

Pursuant to art. 13 of Legislative Decree no. 49 of 2014 "Implementation of the WEEE Directive 2012/19/EU on waste electrical and electronic equipment" The bar-barred box mark specifies that the product was placed on the market after 13 August 2005 and that at the end of its useful life it should not be treated as other waste but should be disposed of separately. All equipment is made of recyclable metal materials (stainless steel, iron, aluminum, galvanized sheet, copper, etc.) in a percentage greater than 90% by weight.
It is necessary to pay attention to the management of this product at the end of its life by reducing the negative impacts on the environment and improving the effectiveness of the use of resources, applying the principles of "polluter pays", prevention, preparation for reuse, recycling and recovery. Please note that improper or improper disposal of the product involves the application of the penalties provided for by current legislation.

13.2 INFORMATION ON DISPOSAL (UNION EUROPEAN)
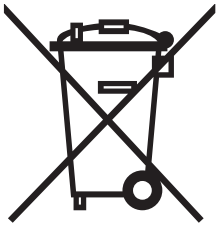
The EU Directive on WEEE equipment has been transposed differently from each country, so if you want to dispose of this equipment we suggest that you contact the local authorities or the Reseller to ask for the correct method of disposal.