Scotsman
Ice Systems

UC GOURMET UNDERCOUNTER

MODEL-UC0918GAX-1A

Installation and Service Manual

ADDRESS:
Scotsman Ice
101 Corporate Woods Parkway
Vernon Hills, IL 60061

SC090094 45

Rev 03/26

GENERAL INFORMATION AND INSTALLATION

A. INTRODUCTION

This manual provides the specifications and the step-by step procedures for the installation, start up, operation, cleaning, and maintenance for the Scotsman Ice UC Undercounter ice makers. **To retain the safety and performance built into this ice maker, it is important that installation and maintenance be conducted in the manner outlined in this manual.**

For more technical information, refer to www.scotsman-ice.com.

B. UNPACKING AND INSPECTION

1. Call your authorized Scotsman Ice Distributor or Dealer for proper installation.
2. Visually inspect the exterior of the packaging and skid. Any severe damage noted should be reported to the delivering carrier.
3. Cut and remove the plastic strip securing the carton box to the skid. Cut open the top of the carton and remove the protection sheet. Pull out the corner posts, and then remove the carton.
4. Remove the front panel of the unit, and inspect for any concealed damage. Notify the carrier of any concealed damage.
5. Check that refrigerant lines do not rub against or touch other lines or surfaces, and the fan blade moves freely.
6. Check that the compressor fits snugly onto all its mounting pads.
7. Remove all internal support packaging and masking tape.
8. Use a clean, damp cloth to wipe the surfaces inside the storage bin and the outside of the cabinet.
9. See data plate on the rear side of the unit and check that local main voltage corresponds with the voltage specified on it.

CAUTION: Incorrect voltage supplied to the ice maker will void your parts replacement program.

10. Register the unit at https://www.scotsman-ice.com/service-support/.
11. Install and adjust legs provided to level the unit.

C. LOCATION AND LEVELING

WARNING: This ice maker is designed for <u>indoor installation only</u>. Extended periods of operation at temperatures exceeding the following limitations will constitute misuse under the terms of the Scotsman Ice Manufacturer's Limited Warranty, resulting in loss of warranty coverage.

1. Position the unit in the selected permanent location. Criteria for selection of location include:

a. Minimum room temperature of 50˚F (10˚C) and maximum room temperature of 100˚F (40˚C).
b. Minimum water inlet temperature of 40˚F (5˚C) and maximum water inlet temperature of 90˚F (35˚C).
c. Well ventilated location.
d. Service access: adequate space must be left for all service connections through the rear of the ice maker. A minimum clearance of 6" (15cm) must be left at the sides of the unit for routing air drawn into and exhausted out of the compartment to maintain proper condensing operation.

2. Level the unit in both the left to right and front to rear directions.

D. ELECTRICAL CONNECTIONS

See data plate for current requirements to determine wire size to be used for electrical connections. All Scotsman Ice ice makers require a solid earth wire. They are supplied from the factory completely pre-wired and require only electrical power connections to the wire cord provided at the rear of the unit. Make sure the ice maker is connected to its own circuit and individually fused (see data plate for fuse size). The maximum allowable voltage variation should not exceed -10% and +10% of the data plate rating. Low voltage can cause faulty functioning and may be responsible for serious damage to the overload switch and motor windings. Check voltage on the line and the ice maker's data plate before connecting the unit.

NOTE: All external wiring should conform to national, state, and local standards and regulations.

E. WATER SUPPLY AND DRAIN CONNECTIONS

GENERAL

When choosing the water supply for the ice maker consideration should be given to:

a. Length of run
b. Water clarity and purity
c. Adequate water supply pressure

Since water is the most important single ingredient in producing ice, the three items listed above are extremely significant. Low water pressure, below 14 psi (1 bar), may cause malfunction of the ice maker. Water containing excessive minerals will tend to produce cloudy ice cubes, in addition to scale build-up on parts of the water system.

WATER SUPPLY

Connect the ¾" GAS male fitting of the solenoid water inlet valve to the cold-water supply line with regular plumbing fitting and a shut-off valve installed in an accessible position between the

water supply line and the unit. If water contains a high level of impurities, it is advisable to consider the use of an appropriate water filter.

WATER DRAIN

The recommended drain tube is a plastic or flexible tube with ¾" (18mm) I.D. which runs to an open trapped and vented drain.

NOTE: The water supply and the water drain must be installed to conform with the local code. In some cases, a licensed plumber and/or a plumbing permit is required.

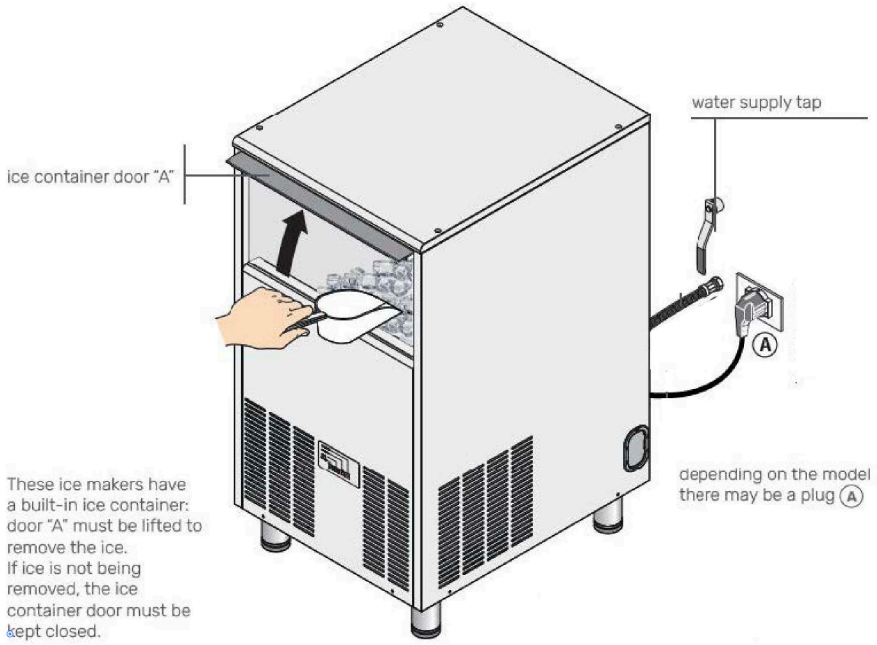

F. FINAL CHECK LIST

1. Is the unit in a room where the ambient temperatures are within a minimum of 50˚F (10˚C) even in winter months?
2. Is there at least a 6" (15cm) clearance around the unit for proper air circulation?
3. Is the unit level? (IMPORTANT)
4. Have all the electrical and plumbing connections been made, and is the water supply shut-off valve open?
5. Has the voltage been tested and checked against the data plate rating?
6. Has the water supply pressure been checked to ensure a water pressure of at least 14 psi (1 bar)?
7. Check all refrigerant lines and conduit lines to guard against vibrations and possible failure.
8. Have the bolts holding the compressor down been checked to ensure that the compressor is snugly fitted onto the mounting pads?
9. Have the bin liner and cabinet been wiped clean?

10. Has the owner/user been given the Installation and Service Manual and been instructed on the importance of periodic maintenance checks?
11. Has the unit been registered for warranty? Check for correct model and serial number against the serial plate.
12. Has the owner been given the name and the phone number of the authorized Scotsman Ice Service Agency serving him/her?

G. INSTALLATION PRACTICE

WARNING: This icemaker is not designed for outdoor installation and will not function in ambient temperatures below 50˚F (10˚C) and above 109˚F (43˚C). This ice maker will malfunction with water temperatures below 40˚F (5˚C) or above 100˚F (38˚C).

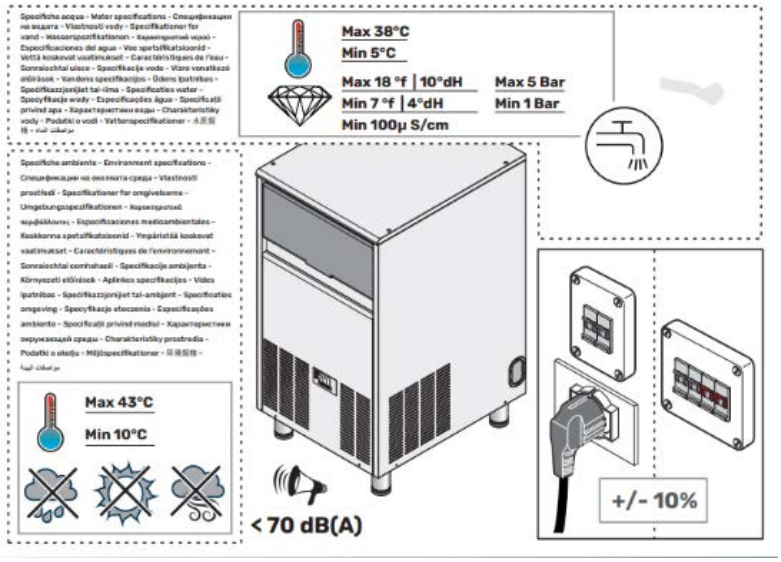

OPERATING INSTRUCTIONS

START UP

After having correctly installed the ice maker and completed the plumbing and electrical connections, perform the following “start-up” procedure.

A. Plug in the ice maker. Unit will start up in charging cycle mode.

NOTE: Every time the unit returns under power, after having been switched off, the water inlet valve, the hot gas valve, and the water drain valve get energized for a period of 5 minutes, allowing water to the machine sump reservoir to fill up and to wash off any dirt that has been deposited. (Fig. 1.)

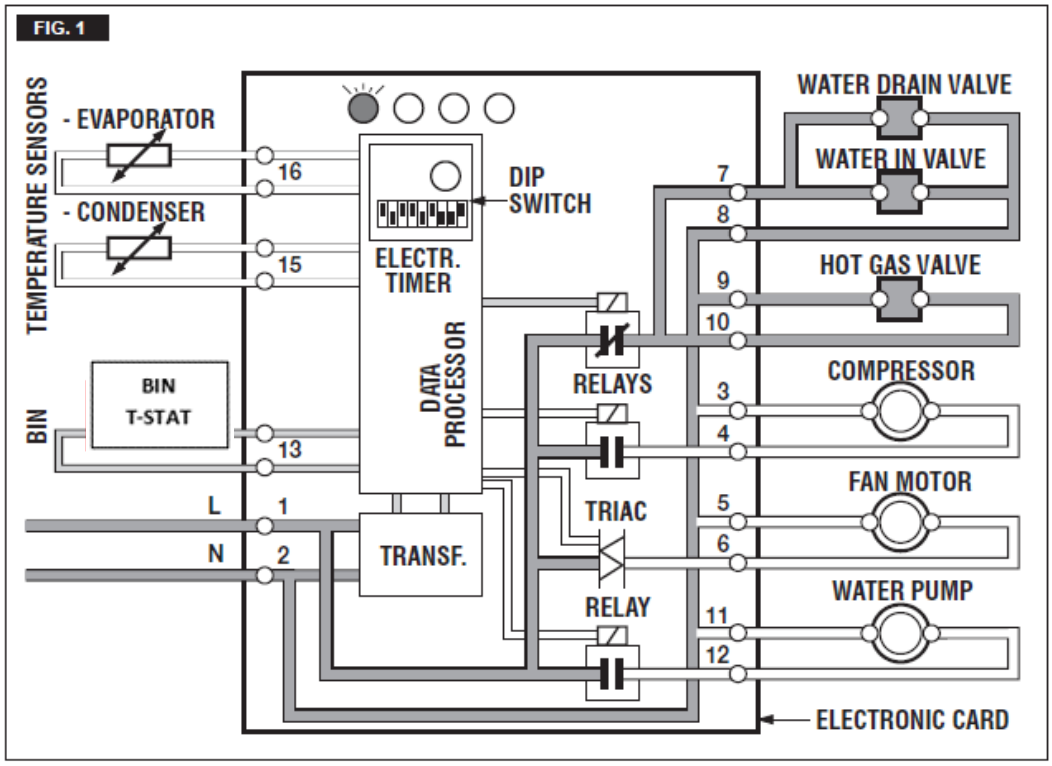

B. During the water filling operation, check to verify that the incoming water dribbles, through the evaporator plate dribbler holes, down into the sump reservoir to fill. Also, check that the incoming surplus of water flows out through the overflow pipe into the drain line. During the water fill phase, the components energized are:

1. Water inlet solenoid valve
2. Hot gas solenoid valve

NOTE: If in the 5 minutes during water fill phase the machine sump reservoir does not get filled with water up to the rim of the overflow pipe, it is advisable to check:

1. **The water pressure of the water supply line that must be at least 14psig (1 bar) minimum and 70psig (5 bar) maximum.**
2. **The filtering device installed in the water line that may reduce the water pressure below the minimum value of 14psig (1 bar).**
3. **Any clogging situation in the water circuit like the inlet water strainer and/or the flow control.**

C. At completion of the water fill phase (5 minutes) the unit passes automatically into the freezing cycle with the start up of the compressor, water pump, and fan motor (controlled by the condensing temperature sensor located within the condenser fins (Fig. 2).

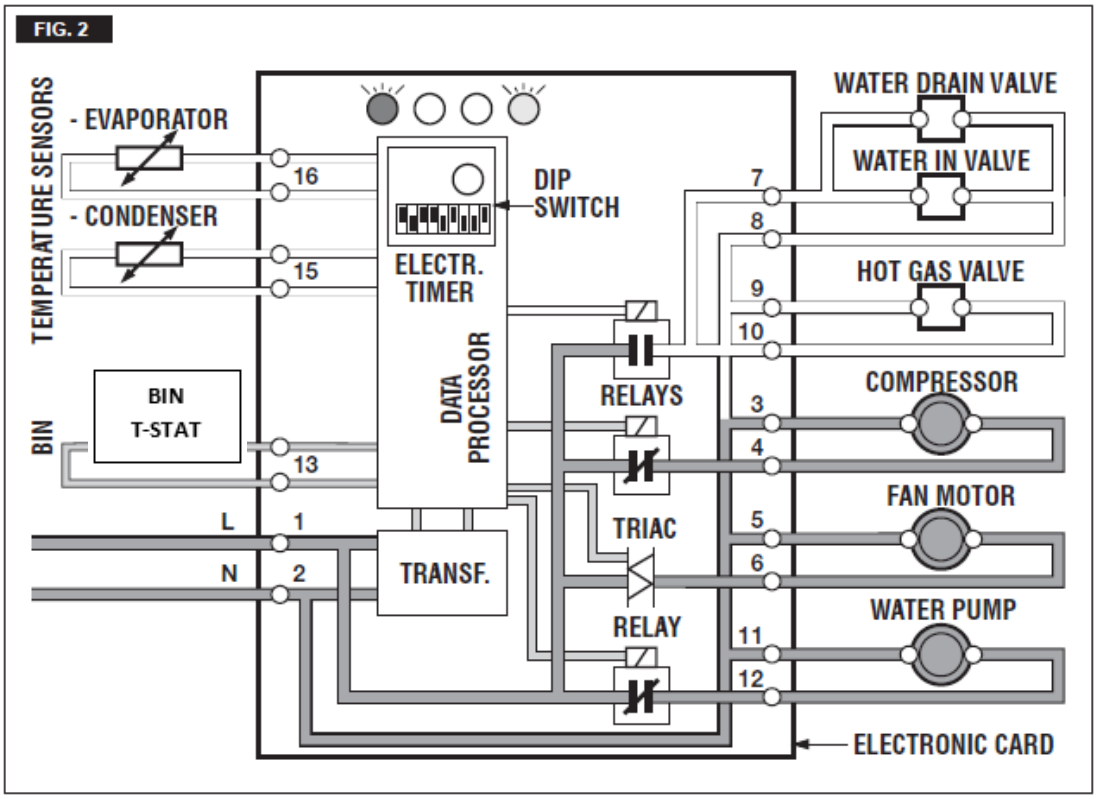

D. Install, if required, the refrigerant service gauges on both the high side and low side Schrader valves to check the compressor head and suction pressures.

NOTE: The condenser temperature sensor, which is located within the condenser fins, keep the head (condensing) pressure between 110-130psig (8.5-9.5 bar).

In case the air filter is clogged, preventing the proper flow of air or, in case the fan motor is out of operation, the condenser temperature rises and when it reaches 160˚F (70˚C), the condenser temperature sensor shuts off the ice maker with the light up of the red warning LED (Fig. 3) as well as the red alarm light (ON steady).

After having diagnosed the cause of the temperature increase and corrected it, then it is necessary to unplug (wait a few seconds) and plug back in, thus restarting the freeze cycle.

The machine restarts with the usual 5 minutes water fill phase in order to provide enough water into the sump tank.

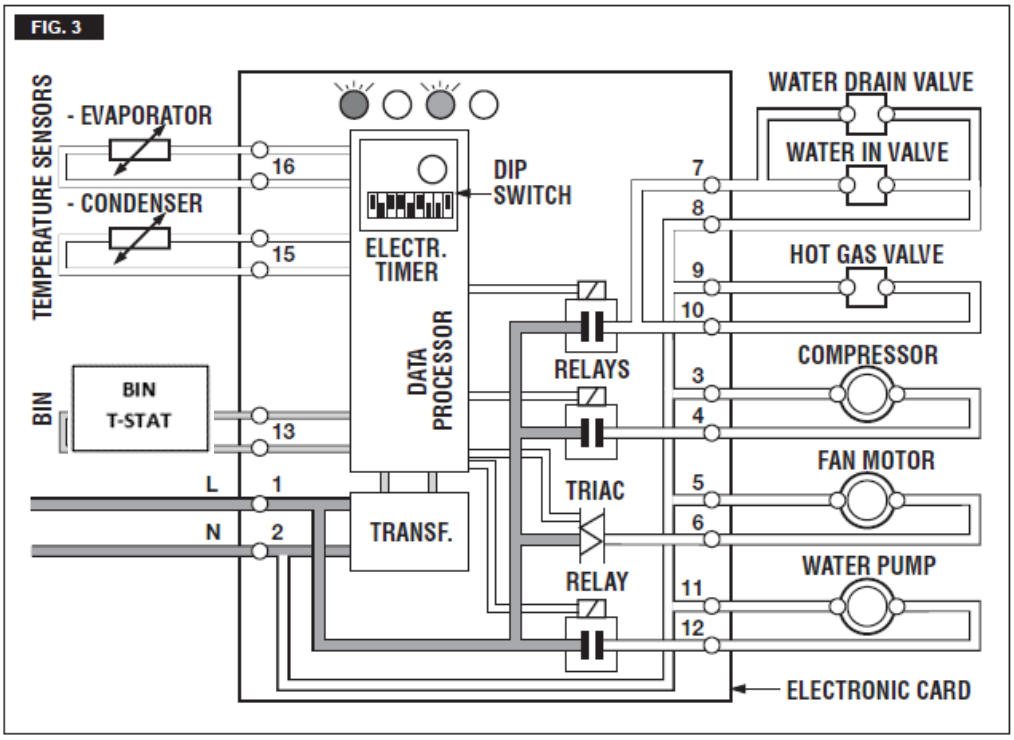

E. Check to see through the ice discharge opening that the spray system is correctly seated and that the water jets uniformly reach the interior of the inverted mold cups. Also, make sure that the plastic curtain is hanging freely and there is not excessive water spilling through it.

F. The ice making process begins with the water sprayed into the molds that gets gradually refrigerated by the heat exchange with the refrigerant flowing into the evaporator serpentine. During the freeze cycle, the evaporator temperature falls to 32˚F (0˚C) (red LED blinking as per Fig. 4) and then to 5˚F (-15˚C) (red LED ON steady as per Fig. 4a). When it reaches 5˚F (-15˚C), the evaporator temperature sensor supplies a low voltage power signal to the electronic control device (PC Board) in order to activate an electronic timer. This takes over the control of the freeze cycle up to the complete formation of the ice cubes.

FIG. 4

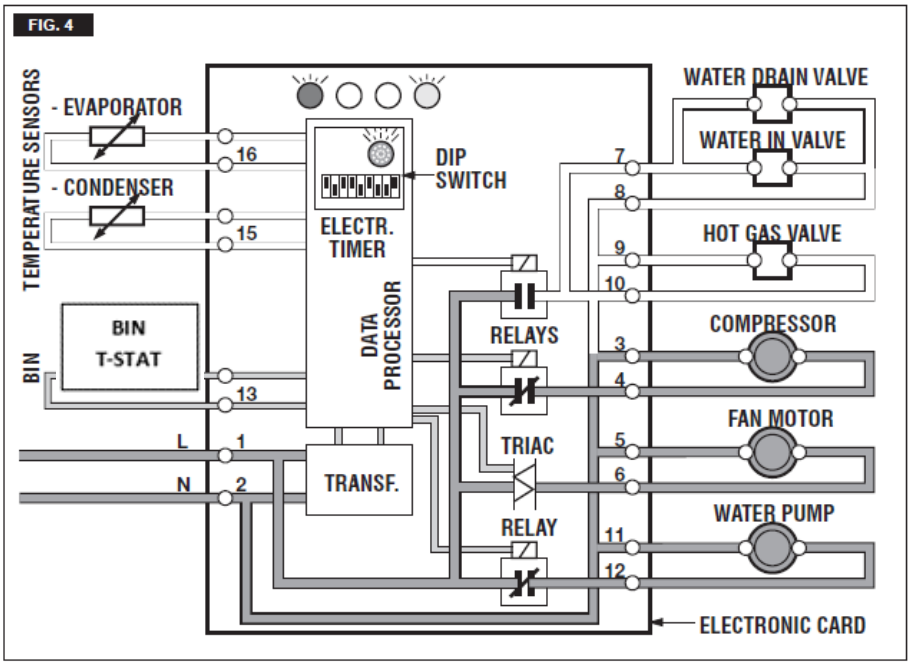
TEMPERATURE SENSORS
- EVAPORATOR
- CONDENSER
BIN
BIN
T-STAT
16
15
13
L
N
1
2
ELECTR.
TIMER
DATA
PROCESSOR
DIP
SWITCH
TRANSF.
RELAYS
TRIAC
RELAY
7
8
9
10
3
4
5
6
11
12
WATER DRAIN VALVE
WATER IN VALVE
HOT GAS VALVE
COMPRESSOR
FAN MOTOR
WATER PUMP
ELECTRONIC CARD

FIG. 4a

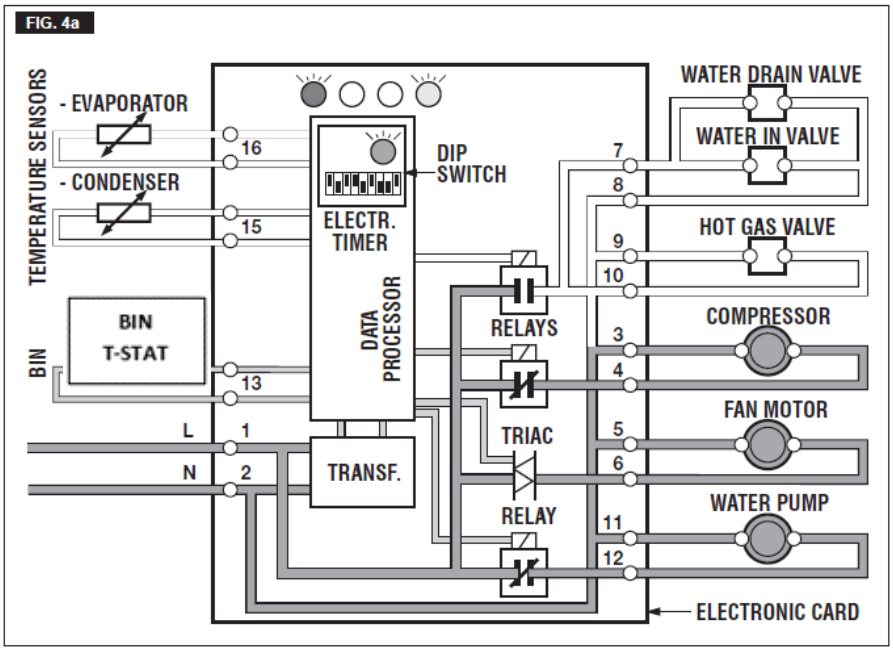
TEMPERATURE SENSORS
- EVAPORATOR
- CONDENSER
BIN
BIN
T-STAT
16
15
13
L
N
1
2
ELECTR.
TIMER
DATA
PROCESSOR
DIP
SWITCH
TRANSF.
RELAYS
TRIAC
RELAY
7
8
9
10
3
4
5
6
11
12
WATER DRAIN VALVE
WATER IN VALVE
HOT GAS VALVE
COMPRESSOR
FAN MOTOR
WATER PUMP
ELECTRONIC CARD

G. After about 17-20 minutes from the beginning of the freeze cycle, in a hypothetical ambient temperature of 70˚F (21˚C), the defrost cycle takes place with the hot gas, the water inlet, and the water drain valves simultaneously activated (Fig. 5). The electrical components in operation on these models are the compressor, water inlet valve and the hot 15 seconds.

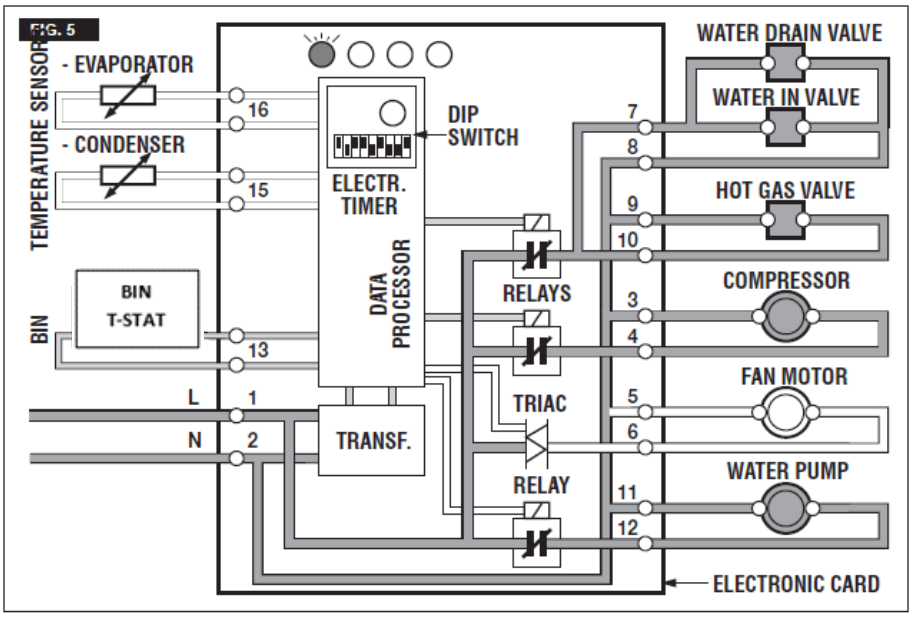

NOTE: The length of the defrost cycle is automatically determined by the PC Board in relation of the time necessary for the unit to reduce the evaporator temperature from 32˚F (0˚C) small red LED blinking to 5˚F (-15˚C) small red LED ON steady - time T2. It is possible to extend the length of the defrost cycle by changing the setting of the dip switch 7 and 8 as shown on the table on page 22.

H. Check, during the defrost cycle, that the incoming water flows correctly into the sump reservoir in order to refill it and that the surplus overflows through the overflow drain tube.

I. Check the texture of ice cubes just released. They have to be in the right shape with a small depression of slightly less than ¼" (about 5-6mm) in their crown. If not, wait for the completion of the second cycle before performing any adjustment. If the ice cubes are shallow and cloudy, it is possible that the ice maker runs short of water during the freeze cycle second phase or, the quality of the supplied water requires the use of an appropriate water filter.

J. As soon as the water into the sealed water reservoir reaches the maximum level, the two metal pins close the electrical contact through the water, transmitting a low voltage current to the PC Board. The PC Board activates the water drain pump for 8 seconds pumping out most of the water contained into the sealed water reservoir.

K. To be sure of the correct operation of bin thermostat, hold ice against the bin thermostat for 2 minutes. The unit should turn OFF.

L. Remove, if fitted, the refrigerant service gauges and refit the unit service panels previously removed.

M. Instruct the owner/user on the general operation of the ice machine and about the cleaning and care it requires.

PRINCIPLE OF OPERATION

In the Scotsman Ice cube ice makers, the water used to make the ice is kept constantly in circulation by an electric water pump which primes it to the spray system nozzles form where it is diverted into the inverted mold cups of the evaporator. A small quantity of the sprayed water freezes into ice; the rest of it cascades by gravity into the sump assembly below for recirculation.

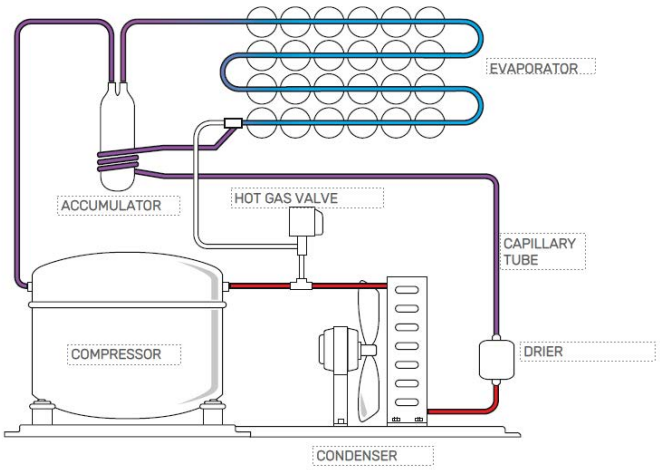

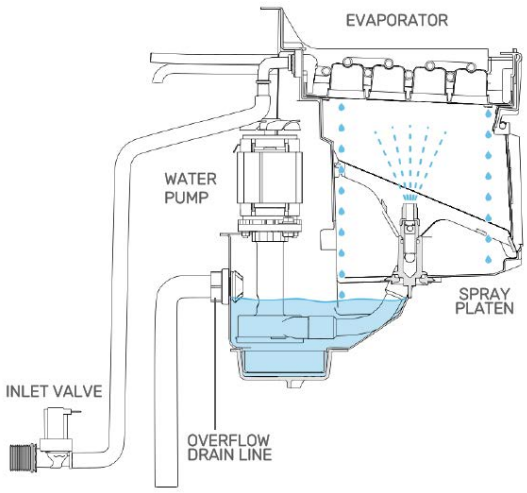

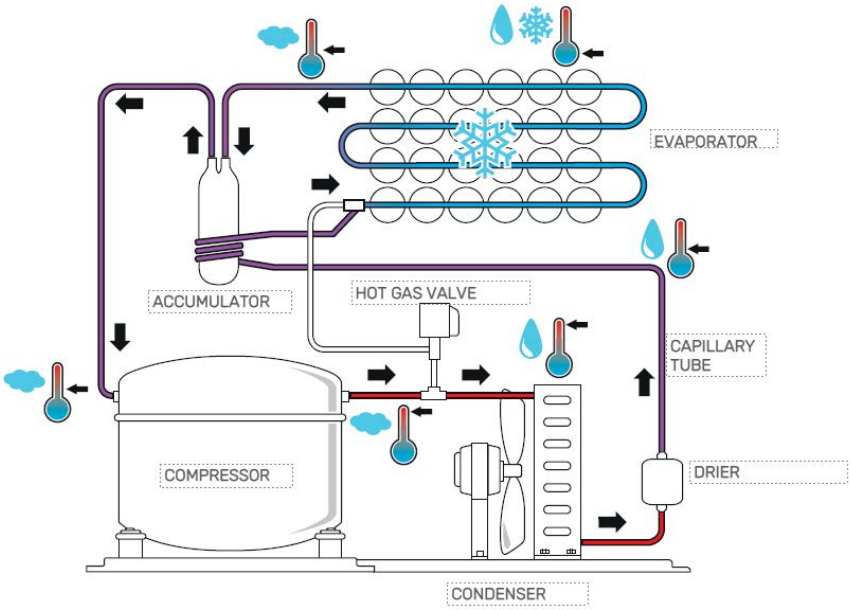

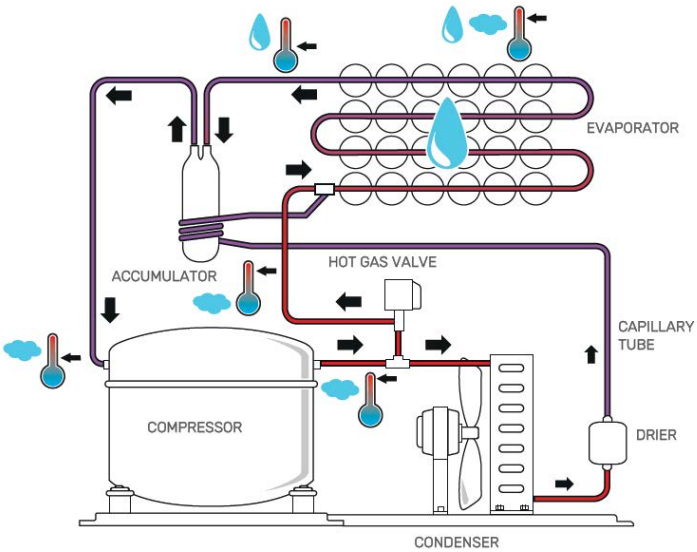

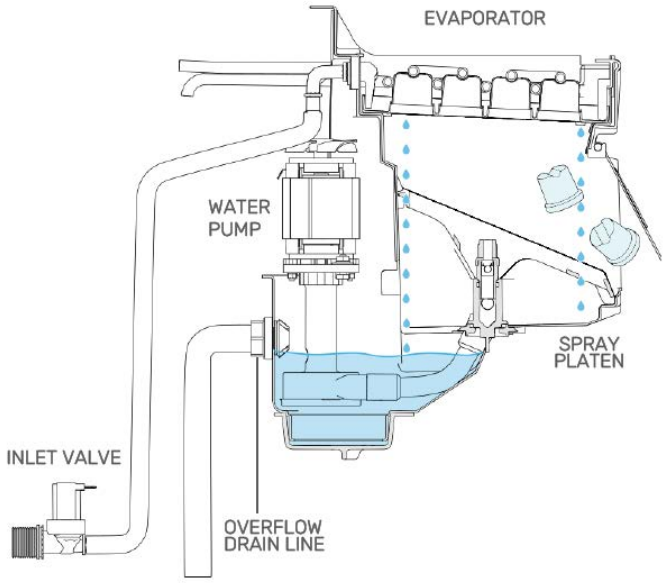

A. FREEZE CYCLE

The freeze cycle is controlled by the evaporator temperature sensor (which has its probe in contact with the evaporator serpentine) that determines the length of its first portion of the cycle. When the temperature of the evaporator serpentine drops to a pre-set value (small red LED ON steady) the evaporator sensor probe changes its electrical resistance allowing a low voltage current (15 volts) to flow to the PC Board which in turn activates an electric timer. The timer, which is built into the PC Board, takes over from the evaporator temperature sensor, and controls the freeze cycle to completion.

The change of the electric potential of the evaporator sensor with the consequent activation of the timer (time mode) is signaled by the glowing of the **RED LED** located in the front of the PC Board.

NOTE: If after 15 minutes in the freeze cycle the temperature of the evaporator sensor probe is higher than 32˚F (0˚C) – small red LED still OFF – (shortage of refrigerant, inoperative hot gas valve, etc.) the PC Board will switch the unit OFF immediately with the simultaneous blinking of the WARNING RED LED.

The length of this timed portion of the freeze cycle is pre-fixed and related to the setting of the first four DIP SWITCH keys. The DIP SWITCH key settings are made in consideration of the type of condenser used and size of ice cubes.

Table B indicates the various lengths of the timed portion of the freeze cycle in relation to the different combinations of the DIP SWITCH keys. The electrical components in operation during the freeze cycle are the compressor, fan motor, and water pump. During the second phase of the freeze cycle (time mode), they are joined by the electronic timer.

The condenser temperature sensor senses a rising of the condenser temperature beyond the pre-fixed limit, changes its electrical resistance, and transmits a low voltage power flow to the microprocessor of the PC Board, which in turn energizes the fan motor.

When the opposite situation occurs, i.e. the condenser temperature gets below the pre-fixed limit, the temperature sensor changes again its electrical resistance reducing the current flow to the PC Board, causing the fan motor to temporarily cut off.

In case the condenser temperature probe senses that the condenser temperature has risen to 160˚F (70˚C), the cause is one of the following reasons:

- Clogged condenser
- Fan motor malfunction
- Ambient temperature higher than 100˚F (40˚C)

The reasons above will cause the total and immediate shut off of the machine in order to prevent the unit from operating in abnormal and dangerous conditions. When the ice maker stops on account of this protective device, there is a simultaneous glowing of the **RED LED** and **RED LIGHT (STEADY)**, warning the user of the **HIGH TEMPERATURE** situation. After having eliminated the source of the condenser high temperature, restarting the machine is necessary. The ice machine will resume its normal operation by going through the 5-minute water fill phase.

B. DEFROST OR HARVEST CYCLE (FIG. E AND G)

As the electronic timer has carried the system throughout the second phase of the freeze cycle, the defrost cycle begins.

NOTE: In case the unit is able to reach 32˚F (0˚C) evaporating temperature within 15 minutes, but after 45 minutes from the beginning of the freeze cycle it has not yet reached the evaporator temperature of 5˚F (-15˚C), the machine goes straight into the defrost cycle omitting the timed portion of the freeze cycle per the setting of the first four DIP SWITCHES.

The length of the defrost cycle is related to the length of the second phase of the freeze cycle T2. (Time to drop the evaporating temperature from 32˚F (0˚C) – small red LED blinking – to 5˚F (-15˚C) small red LED ON steady. It is possible to extend the length of the defrost cycle by changing the setting of the DIP SWITCH 7 and 8 as shown on the table on page 22.

The electrical components in operation during this phase are the compres sor, water inlet valve, hot gas valve, and water drain valve.

The incoming water, passing through the water inlet valve and the flow control, runs over the evaporator plate and then flows by gravity through the dribbler holes down into the sump/reservoir. (Fig. F and H). The water filling the sump/reservoir forces part of the surplus water from the previous freeze cycle to go out to the waste through the overflow pipe. This overflow limits the level of the sump water, which will be used to produce the next batch of ice cubes. Meanwhile, the refrigerant as hot gas, discharged from the compressor, flows through the hot gas valve directly into the evaporator serpentine by-passing the condenser. The hot gas circulating into the serpentine of the evaporator warms up the copper molds, causing the defrost of the ice cubes. The ice cubes, released from the cups, drop by gravity onto a slanted cube chute, then through a curtained opening they fall into the storage bin. At the end of the defrost cycle, the hot gas valve, the water inlet valve, and the water drain valve close and the machine starts again a new freeze cycle.

C. OPERATION – CONTROL SEQUENCE

At the start of the freeze cycle the evaporator temperature sensor controls the length of the first part of the freeze cycle. As it reaches a predetermined temperature it supplies a low voltage current to the PC Board in order to activate the electronic timer, which takes over the control of the freeze cycle for a pre-fixed time, according to the DIP SWITCH keys setting (see Tab. B).

The evaporator temperature sensor, factory pre-set, is the same for all the models and is not adjustable in the field.

Once the freeze cycle is completed, the system goes automatically into the defrost cycle which has also a pre-fixed length. At completion of the defrost cycle, the PC Board commands the unit to start again a new freeze cycle.

D. OPERATION – ELECTRICAL SEQUENCE

The following charts illustrate which switches and which components are ON or OFF during a particular phase of the ice making cycle. Refer to the wiring diagram for a reference.

1. BEGINNING FREEZE

Electrical Components (Loads)	**ON**	
Compressor……..	✓	
Fan Motor and TRIAC…….	✓	
Hot Gas Valve……..		✓
Water Inlet Valve……..		✓
PC Board Relay 1 Coil…….		✓
PC Board Relay 2 & 3 Coil……	✓	
Water Pump…….	✓	
PC Board Timer……..		✓

Electronic Controls & Sensors	**ON**	**OFF**
Evaporator Sensor……..		✓
Condenser Sensor…….	✓	
Bin Thermostat……	✓	

2. TIMED FREEZE

Electrical Components (Loads)	**ON**	**OFF**
Compressor……..	✓	
Fan Motor and TRIAC…….	✓	
Hot Gas Valve……..		✓
Water Inlet Valve……..		✓
PC Board Relay 1 Coil…….		✓
PC Board Relay 2 & 3 Coil……	✓	
Water Pump…….	✓	
PC Board Timer……..	✓	

Electronic Controls & Sensors	**ON**	**OFF**
Evaporator Sensor……..	✓	
Condenser Sensor…….	✓	
Bin Thermostat……	✓	

3. HARVEST

Electrical Components (Loads)	**ON**	**OFF**
Compressor……..	✓	
Fan Motor and TRIAC…….		✓
Hot Gas Valve……..	✓	
Water Inlet Valve……..	✓	
PC Board Relay 1 Coil…….	✓	
PC Board Relay 2 & 3 Coil……		✓
Water Pump…….		✓
PC Board Timer……..	✓	

Electronic Controls & Sensors	**ON**	**OFF**
Evaporator Sensor……..		✓
Condenser Sensor…….		✓
Bin Thermostat……	✓	

TIMED PORTION FREEZING CYCLE TEMPS PHASE TEMPORISÉE CONGELATION *TEMPI FASE TEMPORIZZATA CONGELAMENTO*				
1	2	3	4	
ON	ON	ON	ON	1 min.
OFF	ON	ON	ON	3 min.
ON	OFF	ON	ON	5 min.
OFF	OFF	ON	ON	7 min.
ON	ON	OFF	ON	9 min.
OFF	ON	OFF	ON	11 min.
ON	OFF	OFF	ON	13 min.
OFF	OFF	OFF	ON	15 min.
ON	ON	ON	OFF	17 min.
OFF	ON	ON	OFF	19 min.
ON	OFF	ON	OFF	21 min.
OFF	OFF	ON	OFF	23 min.
ON	ON	OFF	OFF	25 min.

7	8	ADDITIONAL DEFROST TIME TEMPS AJOUTÉS *TEMPI AGG. SCONGELAMENTO*
ON	ON	0
OFF	ON	30 sec.
ON	OFF	60 sec.

7	8	
OFF	OFF	WATER PUMP OFF DURING DEFROST POMPE A L'ARRÊT PEND. DEGIVRAGE *POMPA ACQUA DURANTE SBRINAMENTO*

4. REFRIGERANT METERING DEVICE

Capillary Tube

5. COMPONENTS DESCRIPTION

a. Evaporator Temperature Sensor

The evaporator temperature sensor probe, located in contact with the evaporator serpentine, detects the dropping of the evaporator temperature during the freeze cycle and signals it by supplying a current flow to the microprocessor of the PC Board. According to the current received, the small red LED of the PC Board is energized (blink or steady). When steady, the microprocessor supplies power to the electronic timer built into the PC Board so that it takes control of the last portion of the freeze cycle. The length of the timed phase is pre-fixed by the setting of the keys 1, 2, 3, and 4 of the DIP SWITCH.

If after 15 minutes from the beginning of the freeze cycle, the evaporating temperature has not yet reached 32˚F (0˚C) – small red LEF OFF – the PC Board switches OFF the machine with the blinking of WARNING RED LED.

b. Condenser Temperature Sensor

The condenser temperature sensor probe, located within the condenser fins, detects the condenser temperature variations and signals them by supplying current, a low voltage, to the PC Board. In relation to the different current received, the microprocessor of the PC Board supplies, through a TRIAC, the power at high voltage to the fan motor in order to cool the condenser and to reduce its temperature. In case the condenser temperature rises and reaches 160˚F (70˚C), the current arriving to the microprocessor will immediately shut down the machine.

c. Bin Thermostat

If the bin thermostat is open at the completion of harvest, the unit will shut down.

d. PC Board

The PC Board, in the control box, located in the front of the unit, consist of two separate printed circuits – one at high and one at low voltage. Integrated with fuse for power output (6.3A), four aligned LEDs monitor the operation of the machine. It consists of one extra monitoring **RED LED** (blink 32˚F (0˚C) – steady - 60˚F (15˚C)), one DIP SWITCH block with ten keys, one push button, input terminals for the leads of the sensor probes, and input and output terminals for the leads of the ice maker electrical wires.

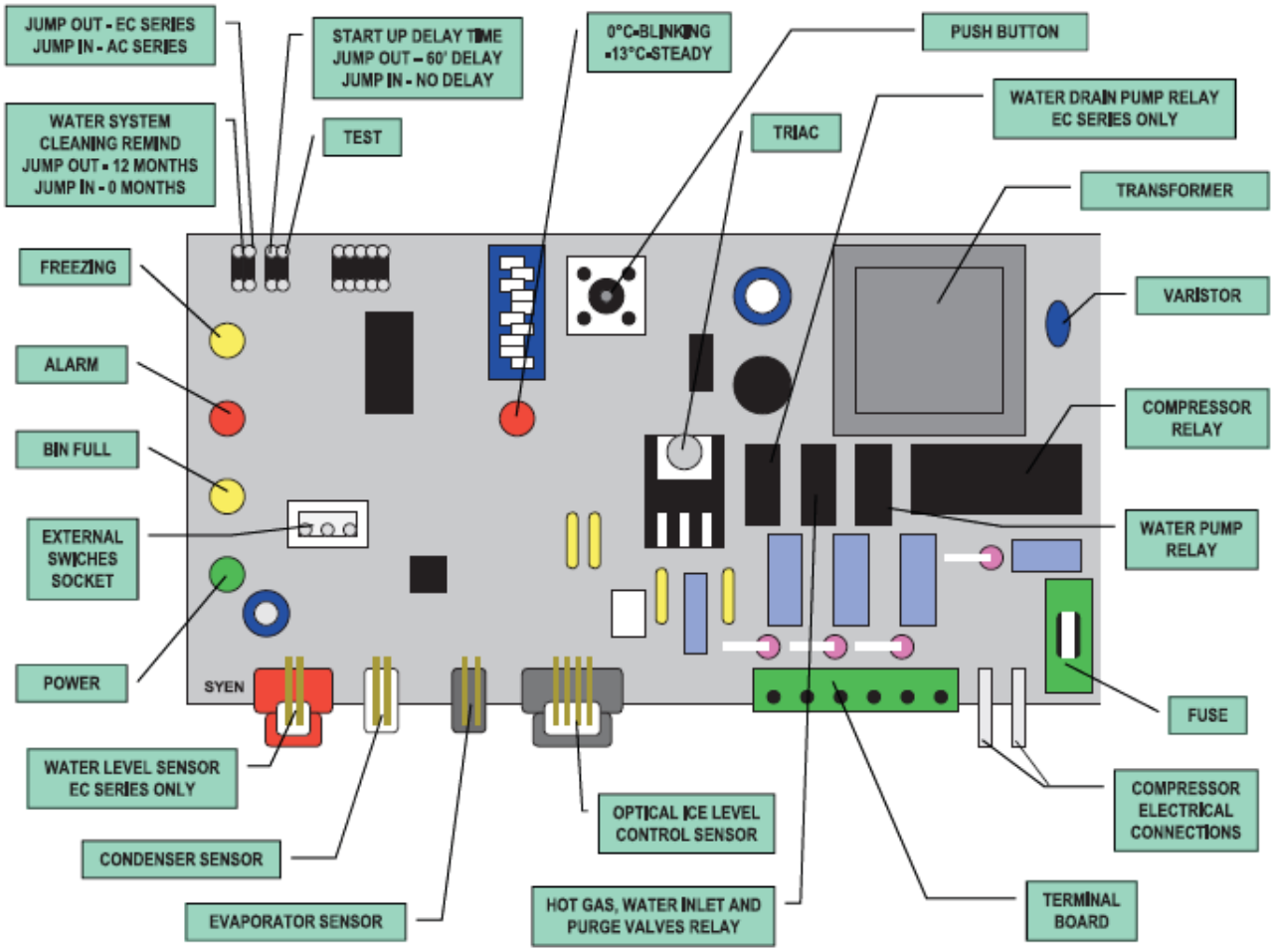

At restart, from tripping OFF at bin full, the new PC Board assures 45 seconds water fill phase to refill the water sump up to the maximum level.

On the PC Board there are four jumpers to select:

- 0 or 12 months remind time for the water system cleaning
- Operation of the purge out water pump
- “No delay” or 60 minutes delay time at first start up
- TEST

In case the TEST contacts are closed with the jumper, at the start up of the machine, the PC Board energizes all the electrical components for a maximum of 3 minutes.

At the end of the 3 minutes, the PC Board switches OFF the entire machine with the blinking of all the LEDs as shown on the drawing below.

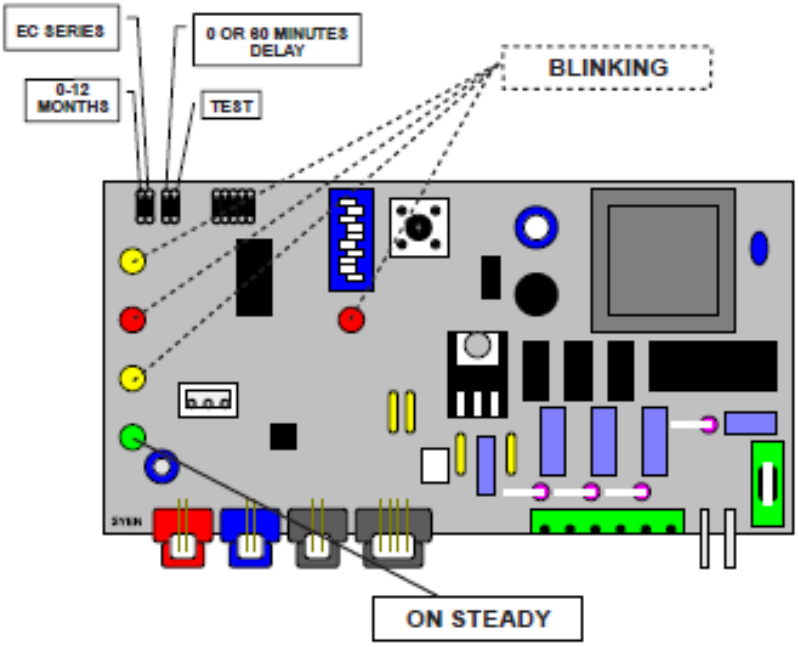

e. Push Button Operation

During water filling phase:

- When pushed for more than 2 seconds but less than 5 seconds, the machine enters in Cleaning Mode
- When pushed for more than 5 seconds, the machine will by-pass the water fill phase

During freeze/harvest cycle:

- When pushed for more than 5 seconds during the freeze cycle, the machine goes immediately into harvest
- When pushed for more than 5 seconds during the harvest cycle, the machine enters immediately in the freeze cycle

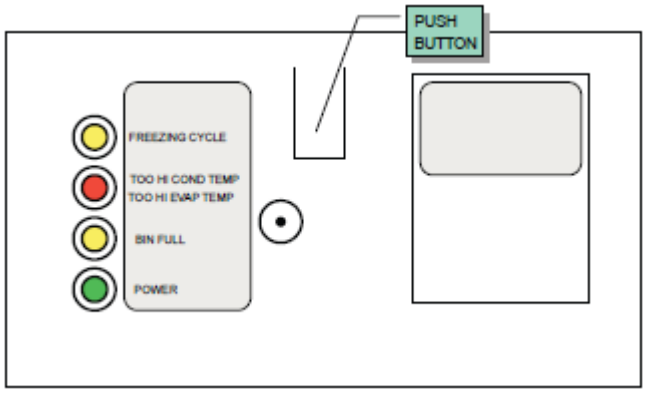

f. LED Meaning

- **GREEN LED ON** – unit powered ON
- **YELLOW BIN FULL LED ON** – unit shut OFF with full bin
- **RED ALARM LED ON** – high condensing temperature
- **RED ALARM LED BLINKING** – high evaporating temperature
- **YELLOW FREEEZE CYCLE ON** – unit in freeze cycle mode
- **YELLOW FREEZE LED AND RED ALARM LED ON** – condenser sensor malfunction
- **YELLOW FREEZE LED AND RED ALARM LED BLINKING** – evaporator sensor malfunction

LED	STATUS	REASON WHY
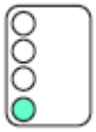	ON STEADY	UNIT UNDER POWER
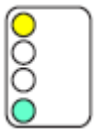	ON STEADY	FREEZE CYCLE
	BLINKING	60 MINUTES DELAY AT START UP JUMPER J3 OUT
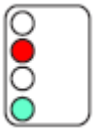	ON STEADY	HIGH DISCHARGE PRESSURE/TEMP
	BLINKING	HIGH EVAP TEMP (>32˚F/0˚C) AFTER 15 MINUTES FROM START UP
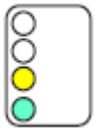	ON STEADY	UNIT OFF AT BIN FULL
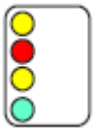	BLINKING	UNIT IN CLEANING MODE OR TRIPPING OFF AFTER TEST – JUMPER TEST IN

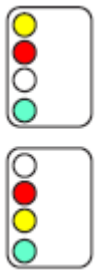	ON STEADY	CONDENSER SENSOR MALFUNCTION
	BLINKING	EVAPORATOR SENSOR MALFUNCTION

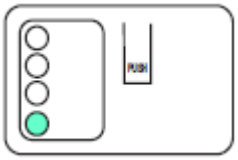	PUSH >5 SECONDS DURING WATER FILL TO MOVE THE UNIT INTO FREEZE PUSH >5 SECONDS DURING FREEZE TO MOVE THE UNIT INTO DEFROST PUSH >5 SECONDS DURING DEFROST TO MOVE THE UNIT INTO FREEZE PUSH 2 SECONDS-5 SECONDS DURING WATER FILL TO MOVE TH EUNIT INTO CLEANING PUSH DURING THE 60 MINUTE START UP DELAY TIME TO BY-PASS IT

g. Dip Switch

The PC Board which controls the entire operation of the ice maker, has a **DIP SWITCH with ten switching keys**, which allow to set up the microprocessor program in order to extend or to shorten the length of freeze cycle in relation to the different model and versions ice machines.

The **DIP SWITCH first four keys setting** determines the length of the 2nd phase of freeze cycle (controlled by the electronic timer) as detailed in Table B.

The **DIP SWITCH keys 5 & 6 setting** determines the length of the defrost cycle according to the size of the cubes (large or medium) as per the following setting:

ON ON : PROGRAM A
ON OFF : PROGRAM B
OFF OFF : PROGRAM C
OFF ON : PROGRAM D

LENGTH OF THE HARVEST CYCLE ACCORDING TO THE TIME TO DROP THE EVAP TEMP FROM 32˚F (0˚C) TO 5˚F (-15˚C)

HARVEST CYCLE LENGTH	PROGRAMS			
	A	B	C	D
180 seconds	Up to 6 min 30 sec	***	Up to 9 min 30 sec	***
165 seconds	6 min 30 sec – 7 min	Up to 3 min	9 min 30 sec – 10 min	***
150 seconds	7-8 min	3 min – 3 min 15 sec	10-11 min	***
135 seconds	8-9 min	3 min 15 sec – 3 min 30 sec	11-12 min	***
120 seconds	9 min - 10 min 30 sec	3 min 30 sec – 4 min 30 sec	12 min – 13 min 30 sec	<3 min
105 seconds	10 min 30 sec – 12 min	4 min 30 sec – 6 min	13 min 30 sec – 15 min	3-4 min
90 seconds	>12 min	>6 min	>15 min	>4 min

The DIP SWITCH keys 7 & 8 setting allow the extension of the length of the harvest/defrost cycle according to their combination as per the following chart:

DIP SWITCH		ADDITIONAL DEFROST TIME
7	8	
ON	ON	0
OFF	ON	30 seconds
ON	OFF	60 seconds

With both the **DIP SWITCH 7 & 8** in OFF position, the water pump is OFF during the harvest cycle with no additional time.

The **9th key** is used to supply power to the water pump for the first **15 seconds** of the defrost cycle – **position OFF** – or for the first **30 seconds** – **position ON**.

The **10th key** is used to modify the CUT-OUT condensing temperature from 160˚F (70˚C) – ON position.

TAB. B LENGTH OF TIMED PORTION OF FREEZING CYCLE ACCORDING TO THE DIP SWITCH SETTING COMBINATIONS

		1	2	3	4				1	2	3	4	
1	ON	▬	▬		▬	25 min.	8	ON		▬		▬	11 min.
	OFF			▬				OFF	▬		▬		
2	ON			▬		23 min.	9	ON	▬	▬		▬	9 min.
	OFF	▬	▬		▬			OFF			▬		
3	ON	▬		▬		21 min.	10	ON			▬	▬	7 min.
	OFF		▬		▬			OFF	▬	▬			
4	ON		▬	▬		19 min.	11	ON	▬		▬	▬	5 min.
	OFF	▬			▬			OFF		▬			
5	ON	▬	▬	▬		17 min.	12	ON		▬	▬	▬	3 min.
	OFF				▬			OFF	▬				
6	ON				▬	15 min.	13	ON	▬	▬	▬	▬	1 min.
	OFF	▬	▬	▬				OFF					
7	ON	▬			▬	13 min.							
	OFF		▬	▬									

h. Condenser Air Filter

Located in front of the air condenser, it can be removed by withdrawing it through the opening of the front panel for cleaning or replacing.

i. Water Spray System

Water is pumped and sprayed (through the nozzles) into each individual cup to be frozen into ice. It consists of one spray tube and several spray nozzles.

j. Water Inlet Solenoid Valve

The water inlet solenoid valve is activated by the microprocessor of the PC Board during the first 5 minutes of the water filling phase as well as during the defrost cycle. When energized, it allows a metered amount of incoming water to flow over the evaporator cavity to assist the hot gas in defrosting the ice cubes. The water running over the evaporator cavity drops by gravity, through the dribble holes of the plate, into the sump reservoir, where it will be pumped by the water pump to prime the spray system.

k. Hot Gas Solenoid Valve

The hot gas solenoid valve consists basically in two parts: the valve body ad the valve coil. Located on the hot gas line, this valve is energized through the microprocessor of the PC Board during the defrost cycle as well as during the water filling phase. During the defrost cycle, the hot gas valve coil is activated to attract the hot gas valve piston in order to give way to the hot gas discharged from the compressor to flow directly into the evaporator serpentine to defrost the formed ice cubes.

l. Fan Motor

The fan motor is controlled through the PC Board and the TRIAC by the condenser temperature sensor. Normally, it operates only during the freeze cycle to draw cooling air through the condenser fins. In the second part of the freeze cycle, the fan motor can run intermittently as the condenser pressure must be kept between two corresponding head pressure values.

m. Compressor

The hermetic compressor is the heart of the refrigerant system and is used to circulate and retrieve the refrigerant throughout the entire system. It compresses the low-pressure refrigerant vapor causing its temperature to rise and become high pressure hot vapor, which is then released through the discharge valve.

UNIT REFRIGERANT CHARGES

The UC Undercounter contains R290A refrigerant. See table below for specifics by model.

Model	Electrical (volts/Hz/phase)	Fuse Size (Amp)	Amps (Unit RLA)	Refrigerant Charge R290
UC0918GAX-1A	115/60/1	15	3.9	4.23 oz (120 g)

CLEANING

Scotsman Ice recommends cleaning the ice machine at least once in a year, but not more than twice in a year to avoid potential damage to the machine.

WARNING: Before proceeding with any cleaning and maintenance operation, make sure the power is disconnected and water supply is turned off.

Cleaning Water System

1. Turn Off the power supply
2. Remove the ice from the bin.
3. Turn off the water supply to the ice machine.
4. Remove top panel, front panel and electronic module panel.
5. Remove plastic panel (evaporator cover) that covers evaporator section.
6. Remove clamp and drain cap from the bottom of the reservoir, allow all the water to drain out.
7. Return the drain cap and clamp to their original positions.
8. Mix approximately 3 ounces (1/10 liter) of Scale Remover with 1.5 quarts (1.5 liter) of warm (95-115°F.) potable water, and pour this solution over the evaporator section (bright metal tubing and inverted cups in white plastic tray at the top of the ice machine).
9. Return the evaporator cover removed in step 5 to its normal position.
10. Turn ON the power supply
11. Press “P1” button inside the electronic module 2s<P1<5s to operate in cleaning mode (20min).
12. Turn OFF the power supply.
13. Remove plastic panel (evaporator cover) that covers evaporator section.
14. Remove clamp and drain cap from the bottom of the reservoir, allow all the water to drain out.
15. Return the drain cap and clamp to their original positions.
16. Pour hot water over the entire surface of the evaporator section. Return evaporator cover to its original position.

Pour hot water into the bin. Wipe the interior of the bin with mild soap and hot water, rinse with cold water.

SANITATION

To sanitize, mix 2 oz of 40 CFR approved sanitizer Nu-Calgon IMS and 2 gallons of warm water (95°F - 115°F) and perform following steps 1-16:

1. Pour sanitizer solution (0.4 gal) over the evaporator section (bright metal tubing and inverted cups in white plastic tray at the top of the ice machine).
2. Return the evaporator cover to its normal position.
3. Turn ON the power supply.
4. Press “P1” button inside the electronic module 2s<P1<5s to operate in cleaning mode (5 min).
5. Repeat steps 12-15 (of Cleaning procedure) and 1-4 four times
6. Turn OFF the power supply
7. Remove evaporator cover. Pour sanitizer solution over the entire surface of the evaporator section and wash or spray the evaporator cover bottom with sanitizer. Return evaporator cover to its original position.
8. Remove curtain, remove clamp and drain cap from the bottom of the reservoir, allow all the water to drain out. Return the drain cap and clamp to their original positions.
9. Spray or wash the bottom of the evaporator cover and the edges of the evaporator section with the sanitizing solution
10. Completely immerse or spray the curtain with the sanitizing solution.
11. Return the evaporator cover and curtain to their original positions.
12. Reconnect water supply.
13. Turn ON the power supply
14. After three minutes, press “P1” button inside the electronic module 2s<P1<5s to operate in cleaning mode (2 min).
15. Press again “P1” button inside the electronic module 2s<P1<5s in order to switch the machine to water loading mode and Operate the machine until one batch of ice has been released into the bin. Pour warm water over the ice to melt it.
16. Return the front and top panels to its original positions and secure with the original screws.

A. Storage Bin

Remove ice from the storage bin. Wipe clean the bin lining, using a mild detergent solution diluted in lukewarm water. Rinse it, then thoroughly disinfect the surfaces by wiping them with a sanitizer. Rinse thoroughly.

B. Cabinet

Use a soft cloth with a mild detergent solution specific for stainless steel.

C. Condenser Air Filter

The air filter is located in front of the condenser. It can be removed by pulling it through the opening in the front panel for cleaning or replacing. Withdraw the air filter from the front through the opening of the front panel. Remove the front panel. Blow pressurized air on the opposite direction of the condenser air flow to remove the dust accumulated. If pressurized air is not available, use tap water always in the counter flow air direction. Once cleaned, shake it to remove most of the accumulated water. Allow it to dry before inserting it back into the machine.

D. Condenser Sensor

The condenser temperature sensor probe, located within the condenser fins detects the condenser temperature variations and signals them by supplying current, at low voltage, to the PC Board.

In case the condenser temperature rises and reaches 160˚F (70˚C), the control system will cause an immediate and total stop of the machine’s operation.

ADJUSTMENT PROCEDURES

A. ADJUSTMENT OF THE CUBE SIZE

NOTE: Before performing actual adjustment of the cube size, check other possible causes for cube size problems, refer to the Service Diagnosis Section for problem review and analysis. Do not perform any adjustment until the ice making system has progressed through several complete freeze and harvest cycles in order to observe the size and quality of ice cubes and whether or not the cube size problem exists.

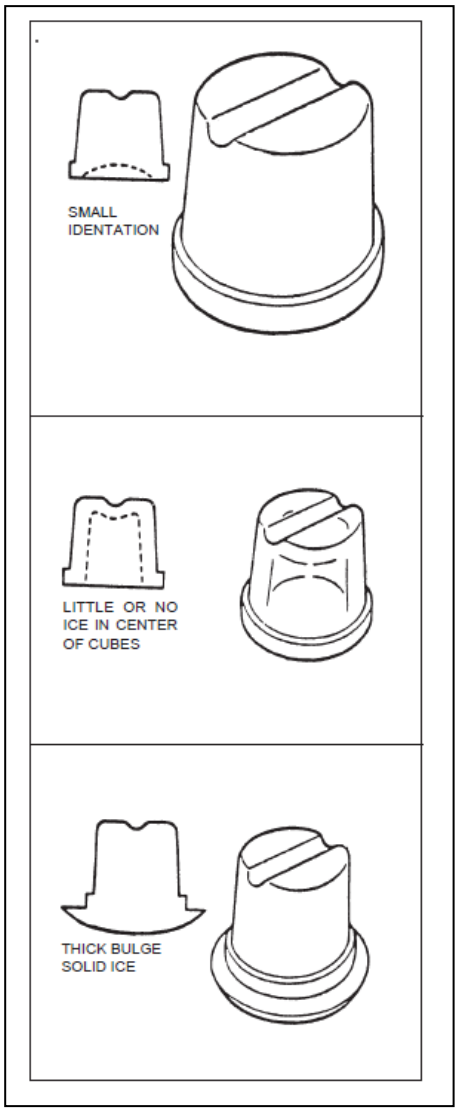

- If the **cubes are too shallow** (indentation is too deep), most likely the length of the second phase of the freeze cycle is too short. To extend the length:
  1. Locate the DIP SWITCH on the front of the PC Board.
  2. Take note of the combination of the first four DIP SWITCH KEYS to correspond to the prior combination shown on Table B.
  3. Set the same DIP SWITCH KEYS to correspond to the prior combination shown on Table B which allow an extension of two more minutes of the length of the freeze cycle.
  4. Observe the ice cubes in the next two harvests and eventually repeat steps 2 and 3 above until proper ice cube size is achieved. See figure.
- If the **cubes are oversize** (indention is too full), most likely the length of the second phase of the freeze cycle is too long. To shorten the length:
  1. Locate the DIP SWITCH on the front of the PC Board.
  2. Take note of the combination of the first four DIP SWITCH KEYS and check the corresponding length of the freeze cycle 2nd phase on Table B.
  3. Set the same DIP SWITCH KEYS to correspond to the next combination shown on Table B which allows a reduction of two minutes of the length of the freeze cycle.
  4. Observe the ice cubes in the next two harvests and eventually repeat steps 2 and 3 above until proper ice cube size is achieved. See figure.

SERVICE DIAGNOSIS

SYMPTOM	POSSIBLE CAUSE	SUGGESTED CORRECTION
Unit will not run:		
• No warning LED glows	Blown power in fuse in PC Board	Replace fuse and check for cause of blown fuse
	Main switch in OFF position	Turn switch to ON position
	Inoperative PC Board	Replace PC Board
	Loose electrical connections	Check wiring
• Green LED-Power ON glows	Blown power out fuse in PC Board	Replace fuse and check for cause of blown fuse
• Bin full LD glows	Inoperative bin thermostat	Clean or replace bin thermostat
• Red-alarm LED glows	Inoperative PC Board	Replace PC Board
	High head pressure	Inoperative fan motor. Replace.
• Red-alarm LED blinks	High evaporating temperature after 15 minutes beginning freeze	Hot gas valve leak; replace. Water inlet valve leak; replace. Short of refrigerant. Compressor cycles intermittently.
• Freezing LED + Red-alarm LED glows and red-alarm blinks twice and repeats	Condenser sensor malfunction	Replace.
• Freezing LED + red-alarm LED blinks	Evaporator sensor malfunction	Replace.
Compressor cycles intermittently	Low voltage	Check circuit for overloading. Check voltage at the supply to the building. If low, contact the power company.
	Non-condensable gas in system	Purge the system, change drier, pull vacuum, and recharge.
	Compressor starting device with loose wires	Check for loose wires in starting device
	Mechanical problem	Replace compressor.

Cubes too small	Freezing cycle too short Capillary tube partially restricted Moisture in the system Shortage of refrigerant	Review setting of DIP SWITCH keys Reclaim charge, evacuate, replace drier, and recharge with proper amount of refrigerant. Same as above. Check for leaks. Repair. Purge the system, change drier, pull vacuum, and recharge.
Cloudy cubes	Shortage of water Dirty water supply Accumulated impurities	See remedies for shortage of water. Use water filter. Clean ice maker.
Shortage of water	Water spilling out through curtain Water solenoid valve not opening Water leak in sump area Water flow control plugged Leak from water drain valve	Check or replace curtain. Replace valve. Locate and repair. Replace water inlet valve. Replace valve.
Irregular cube size and partially cloudy	Some jets plugged Shortage of water Unit not level	Remove jet cover and clean. See shortage of water. Level as required.
Cubes too large	Freeze cycle too long	Review setting of DIP SWITCH keys.
Decreased ice capacity	Inefficient compressor Leaky water valve Non-condensable gas in system Poor air circulation or excessive hot location (red-alarm LED glows)	Replace. Clean or Replace. Purge the system, change drier, pull vacuum, and recharge. Relocate the unit or provide for more ventilation.

	Overcharge of refrigerant	Reclaim charge, evacuate, replace drier, and recharge with proper amount of refrigerant.
	Capillary tube partially restricted	Reclaim charge, evacuate, replace drier, and recharge with proper amount of refrigerant.
	Hot gas solenoid valve leaking	Replace valve.
	Short of refrigerant	Charge to data plate indication.
	Discharge head pressure too high	See incorrect discharge pressure.
Poor harvest	Restriction in incoming water line	Check water valve strainer and flow control. If necessary, enlarge the flow control orifice.
	Water inlet valve not opening	Valve coil with open winding. Replace valve.
	Hot gas valve orifice restricted	Replace hot gas valve assembly.
	Clogged air vented holes in mold cups	Clean out holes plugged.
	Discharge head pressure too low	See incorrect discharge pressure.
Unit won't harvest	Inoperative PC Board	Replace PC Board.
	Hot gas valve not opening	Valve coil with open winding. Replace valve.
	Water solenoid valve not opening	Valve coil with open winding. Replace valve.
Incorrect discharge pressure	Inoperative condenser sensor	Replace sensor.
	Inoperative PC Board	Replace PC Board.
Excessive water in unit base	Water tubing leaking	Check. Tighten or replace.

WIRING DIAGRAM

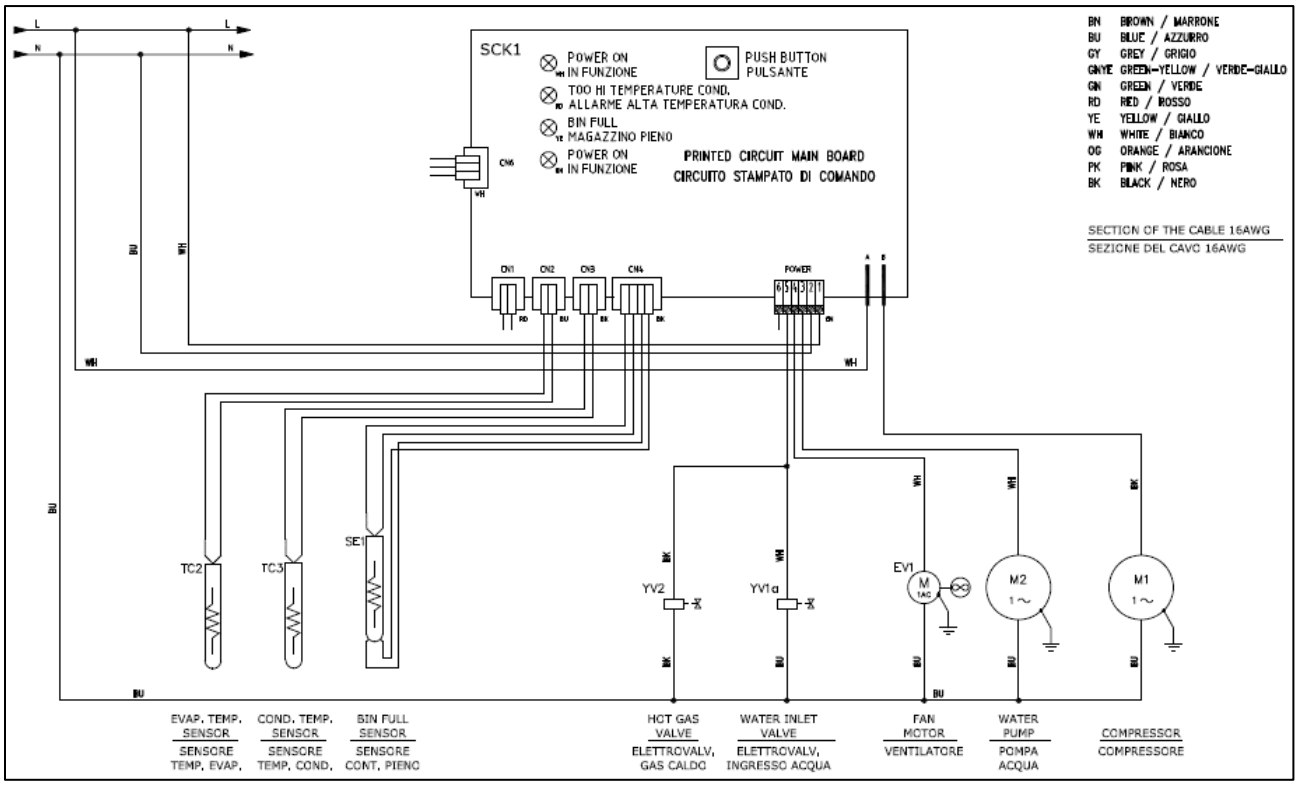

WARRANTY

Please visit www.scotsman-ice.com to register your unit and to get current warranty information. Refer to it for applicable coverage. In general warranty covers defects in material or workmanship. It does not cover maintenance, corrections to installations, or situations when the machine is operated in circumstances that exceed the limitations printed in this manual.

Scotsman®
Ice Systems

SCOTSMAN ICE SYSTEMS
101 Corporate Woods Parkway, Vemon Hills, IL 60061
1-800-533-6006
www.scotsman-ice.com
17-3922-01