HOT
zone

Heated Rotating Pizza Display

OPERATION INSTRUCTIONS

Thank you for choosing and purchasing our product. Please carefully read the operation instructions before use for a correct application and satisfactory effect.

Contents

2. General

2. Structure and Parts

2. Safety

3. Preparation and Power Supply

3. Installation and Operation

4. Use

5. Cleaning and Maintenance

6. Trouble Shooting and Cautions

7. Major Parameters and Electric Circuit Diagram

General

1. This instruction manual contains information about the installation, operation and maintenance of the device and should be consulted as an important source of information and reference guide.
2. Awareness of the safety instructions and instructions for use in this manual will ensure the safe and correct use of the device.

Structure and Parts

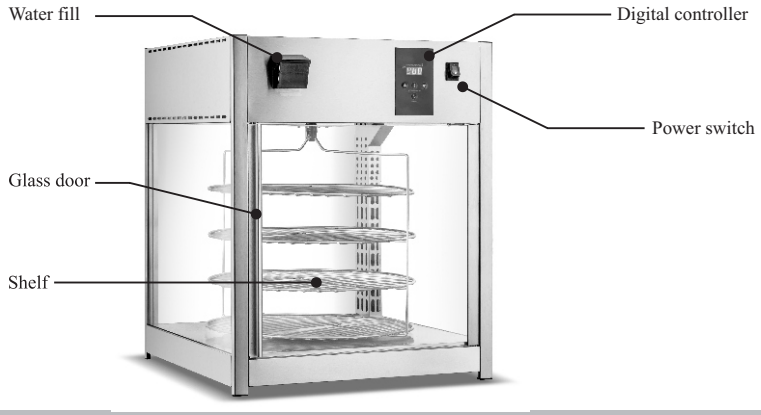

Safety

※ The appliance is not to be used by persons (including children) with reduced physical, sensory or mental capabilities, or lack of experience and knowledge, unless they have been given supervision or instruction
※ Children being supervised not to play with the appliance.
※ This appliance can be used by children aged from 8 years and above and persons with reduced physical, sensory or mental capabilities or lack of experience and knowledge if they have been given supervision or instruction concerning use of the appliance in a safe way and understand the hazards involved
※ Children shall not play with the appliance
※ Cleaning and user maintenance shall not be made by children without supervision
※ If the supply cord is damaged, it must be replaced by the manufacturer, its service agent or similarly qualified persons in order to avoid a hazard.
※ Don't use any kind of pressure water jet for cleaning the device.
※ To prevent hazards and to ensure optimum efficiency, no modifications or alterations to the device that are not explicitly approved by the manufacturer may be undertaken.
This device may only be operated in technically proper and safe condition.
※ The device should be never left unattended during operation. Keep away children.
※ Preserve this manual safely. When passing on/selling the device to a third party, the manuals must be handed over along with the device.
※ Every person using the device must act in accordance to the manuals and under consideration of the safety advice.
※ The device is to be used indoors only.
※ Any technical interventions, as well as assembly and maintenance are to be made by a qualified customer service only.

Preparation and Power Supply

Exclusive power socket

The power receptacle must have a reliable earth connection.

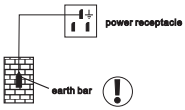

No share on socket

Never let the device share the common socket with other appliance, otherwise the cable becomes hot and fire might be resulted

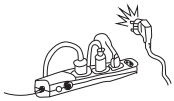

Protect cables

Never break or damage the cables otherwise current leakage and fire might be resulted.

No water flushing

Never give the device surface a flush otherwise current leakage might be resulted.

Prevent from flammables and explosive

Never put any flammable or explosive inside the device such as ether, gasoline,alcohol, adhesive and explosive. Never put dangerous product nearby the device.

Installation and Operation

Installation

※ Place the device on top of an even and safe surface which supports the weight of the device and is not heat sensitive.

※ Not at any time should you place the device on an inflammable surface (such as table cloth, carpet, etc)

※ You must no position the device near open fireplaces, electric ovens/arc furnaces/electric heaters or other heat sources.

※ Position the device in such a way that the plug is easily accessible.

Use

Digital Temperature controller

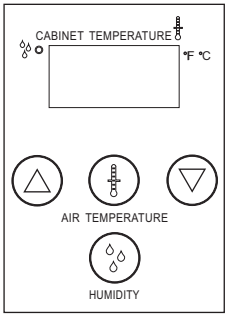

Before use:
1.Put plug in power source.
2.Turn the power switch to the “I” position
a. The display will light up and heating element will start
b. “LO H2O” will flash once on display until water tank is full filled with water. Once the tank is full, “LO H2O” will stop flashing and the display will show cabinet temperature.
3.Fill the tank up with water.
a.Turn up the tank cover
b.Inject water until “LO H2O” stops flashing
Note: Don’t inject water excessively
4.Set the humidity parameters as required (Please refer to below instruction for Humdity setting).
Please find advises of “Food Insulation Tips”
5.Set the temperature parameters as required (Please refer to below instruction for temperature setting).
Please find advises of “Food Insulation Tips”
6.Please reserve 20mins before you put foods into the machine

Operating Instruction
Press "-" for 10s until display shows "OFF", the controller is locked. Press "-" for 10s again, the display shows "ON" which mean controller is open. (When it's locked, display shows water temp. temp. and humidity can't be adjusted at this time).
Note: Before controller is locked, set temp. at 90 degree and humidity at 5 phase.

Set Temperature
1）Press “⊕” button to start (the display will show “tSP”)
2）Press “⊕” button again, the display will show current cabinet temperature.
3）Press ▲ or ▼ to modify temperature. The range is 30℃ to 90℃(30℉ to 90℉).
4）Don’t press any buttons with 15s, so the temperature setting will be stored. The display will come back to normal mode.

Set Humidity
1)Press “%” button to start (the display will show “hSP”)
2)Press “%” button again, the display will show current cabinet humidity
3)Press ▲ or ▼ to modify humidity. The range is 1 to 5。
4)Don’t press any buttons with 15s, so the humidity settting will be stored. The display will come back to normal mode.

Notes:
Different kind of food will affect temperature and humidity setting. Temperature on display is the lowest temperature in cabinet, not food temperature.
Full-injected water tank can continuously work for 3hrs to 6hrs. Working time depends on the different parameter setting and frequency of door opening. When the display flashes “LO H2O”, please inject water immediately!

Operation

※ Before first use, clean the inner sides and the playing grids with a soft cloth and a mild cleaning agent. Afterwards, dry the device thoroughly.
※ Remove the water bowl from the device. The water bowl is installed inside the device and then fill the water bowl with water.
※ Connect the device to a single grounded power socket.
※ Set the temperature as required for respective foods. You may adjust the desired temperature in the range between 30℃-90℃(30℉-90℉).
※ The temperature inside of the hot display can be read from the front display.
※ Put the foods in appropriate containers before playing them inside the hot display and shut it by using the sliding door.
※ Some of the device parts become very hot, always use safety gloves when placing or removing foods.
※ The foods are kept warm at the temperature set by you previously.
※ In order to place or remove foods, you may open the door at rear side.
※ Switch on the inner light when required using the light switch of the device.
※ Disconnect the device from the power socket when the device is not in use.

Cleaning and Maintenance

※ Before beginning with repair or cleaning works make sure the device has been disconnected from the power socket and has cooled down.
※ Don't use any acid agents and make sure no water ingresses the device.
※ To protected yourself from the electric shock, never immerse the device, its cables and the plug in water or other liquids.
※ Don't use any kind of pressure water jet for cleaning the device.

Cleaning

※ The device should be cleaned regularly.
※ Clean the device from the inside and outside with a soft, damp cloth and a mild cleaning agent.
※ Clean the placing grids and the housing with a soft, damp cloth and a mild cleaning agent.
※ Clean the water bowl regularly. Calcification at the water bowl may be removed with common agents or liquids.
※ Only use a soft cloth and make sure you never use any kind of abrasive agents or pads which could scratch the surface.
※ After the cleaning procedure, you should use a soft and dry cloth to wipe dry and polish the surface.
※ Make sure the device has been cleaned properly before storing it in a dry place.

Maintenance

Daily maintenance should be carried out with all power to the unit in the off position, and electrical cord unplugged. Cleaning should be carried out by means of food grade cleaning solutions via a soft or damp cloth. Do not utilize any type of pressurized water equipment.
Regular inspection on the outside and internal cabinet along with the power cord should be observed and carried out on a regular basis to isolate and or observe any unforeseen failure or safety concern.

Cleaning and Install rotary shelf
1. Open glass door
2. Loosed top screws
3. Take out the rotary shelf

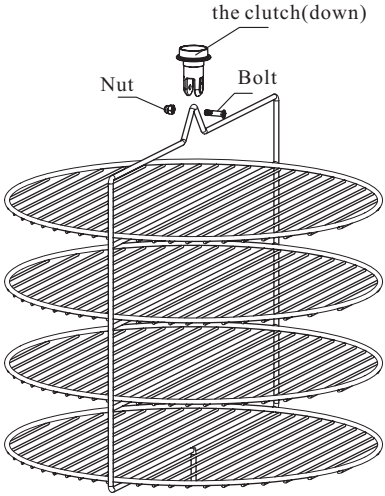

Warning: cleaning outside and internal cabinet must be made with power off at all times.

Trouble Shooting

Fault	Reason(s)	Solution(s)
No Lighting in Interior Cabinet	1. No Power. 2. Florescent lamps failure.	1. Inspect power source. 2. Replace forescent tubes.
Rotating Display has stopped.	1. Motor damage. 2. Front door not completely closed.	1. Replace Motor. 2. Close front door/check magnetic door sensor.
Interior cabinet heat is not warming up.	1. Thermostat off. 2. Thermostat or Heater Coil failure.	1. Dial in temperature. 2. Contact service agent required for possible replacement of heater coil or thermostat.

Cautions

Children should be supervised to ensure that they do not play with the appliance.
- If the supply cord is damaged, it must be replaced by the manufacturer, its service agent or similarly qualified persons in order to avoid a hazard.

Major Parameters

Parameter \ Model	HW-158
Temperature range(℉)	86-194
General Rated Input Power(W)	1300
Rated Current(A)	11.8
Rated Voltage(V)	110-120~
Rated Frequency(Hz)	60
Storage Volume(L)	158
Net Weight(kg)	39
Grade of Waterproof	IPX4
Overall Dimension(mm)	600x642x730

Circuit Diagram

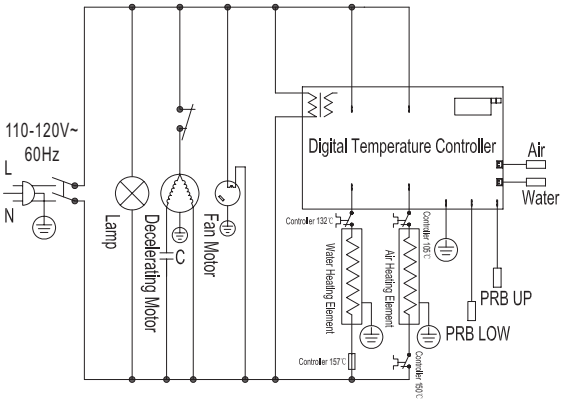

Note

1. The electric circuit diagram and parameters on the product name plate are final ones if they have been changed.
2. The design might be improved without notice.

Meaning of crossed out wheeled dustbin:

Do not dispose of electrical appliances as unsorted municipal waste, use separate collection facilities. Contact you local government for information regarding the collection systems available.

If electrical appliances are disposed of in landfills or dumps, hazardous substances can leak into the groundwater and get into the food chain, damaging your health and well-being.

When replacing old appliances with new ones, the retailer is legally obligated to take back your old appliance for disposals at least free of charge.

Caution hot surface

Do not put the food direct contact with the shelf.