www.BakeMax.com

BakeMax BMFE020
Dual Mini Electric Fryer
Operations Manual

Questions? OEM Parts?

Toll Free: 1-800-565-2253

Email: Info@BakeMax.com

www.BakeMax.com

WARNING

Warning & Safety

PLEASE READ AND FOLLOW INSTRUCTIONS BELOW TO PREVENT INJURY OR DAMAGE TO THE PRODUCT

BakeMax® (a registered trademark of Titan Ventures International Inc or TVI) is not responsible for any harm or injury caused due to any person's improper or negligent use of this equipment. The product shall only be operated by someone over the age of 18, of sound mind, and not under the influence of any drugs or alcohol, who has been trained in the correct operation of this machine, and is wearing authorized, proper safety clothing. This machine is intended for commercial use only. Any modification or miss use to the machine voids any warranty and may cause harm to individuals using the machine or around the machine while in operation.

- When using the machine, please ensure that you have read all the instructions within this manual.
- Be aware of your surroundings when using this machine, ensure there are no children or any other persons who are near the machine before operating.
- Do not put hand near moving parts.
- Remove all obstacles, which may interfere with machine functions.
- Keep work area clean and clear of clutter.
- Do not sit or stand on machine.
- Do not wear loose clothing or jewelry when operating machine as it may get caught in moving parts and cause injury.
- Stop using the machine and have it checked by an authorized service personal if it is not working properly.
- Disconnect from power source before performing and maintenance or cleaning on the machine.
- When the machine is not in use, please clean and store properly,
- Do not place any electrical parts or plug / cord in water or liquid.
- If the supply cord is damaged it must be replaced by an authorized service agent to avoid any electrical hazards.
- Keep power cord away from heat.
- Always ensure to follow local laws when operating your machine.

GENERAL INFORMATION

Before installing the appliance, read operation and maintenance instructions carefully. Wrong installation and part changing may damage the product or may cause injury on people. This are not in our company's responsibility to damage the appliance intentionally, negligence, detriments because of disobeying instructions and regulations, wrong connections. Unauthorized intervention to appliance invalidates the warranty.

1. This instruction manual Should be kept in a safe place for future reference.

2. Installation Should be made in accordance with ordinances and security rules of that country by a qualified service personnel.
3. This appliance must be used by trained person.

4. Please turn off the appliance immediately in the event of malfunction or failure. The appliance Should be repaired only by authorized service personnel. Please demand original spare part.

WARNING:
• This device must be installed in accordance with applicable legislation and should only be used in a well-ventilated area. Please refer to the instructions before installing and using this device.
• Improper installation, adjustment, modification, service or maintenance can result in property damage, injury or death. Read the installation, use and maintenance instructions before installing or servicing this equipment.

SAFETY SYMBOLS

These symbols are intended to alert the user to the presence of important operating and maintenance instructions in the manual accompanying the appliance.

SERVICE AND MAINTENANCE / MAINTENANCE AND REPAIRS

Contact your local authorized service agent for service or required maintenance.

Please record the model number, serial number, voltage and purchase date in the area below and have it ready when you call to ensure a faster service.

Model No.	BMFE020
Serial No.	……
voltage	……
Purchase Date	……

Authorized Service Agent Listing Reference the listing provided with the unit or for an updated listing go to

Website / Site web: www.BakeMax.com
E-mail / Courriel: Sales@BakeMax.com

Service Help Desk	
Company	BakeMax
Website / Site	www.BakeMax.com
Telephone	(800) 565 – 2253
Fax:	(506) 859 – 6929
Address:	20 Caribou St, Moncton, NB E1H 0P3

IMPORTANT

Make sure that all paper protection and packaging have been removed before operating the device. This device should only be installed in the closed position.

WARNING: The device must be used by trained personnel.

PRODUCT TECHNICAL INFORMATION

*The Professional Electric Fryers, that provides high efficiency has been designed to be used in industrial kitchens.

Model	Electrical	Width	Depth	Height	Product Weight	Packaged Weight
BMFE020	208V / 15.6A + 15.6A / 6500W / Two Nema 6-20P	620mm 24.4"	433mm 17.0"	412mm 16.2"	10kg 22lbs.	11.5kg 26lbs.

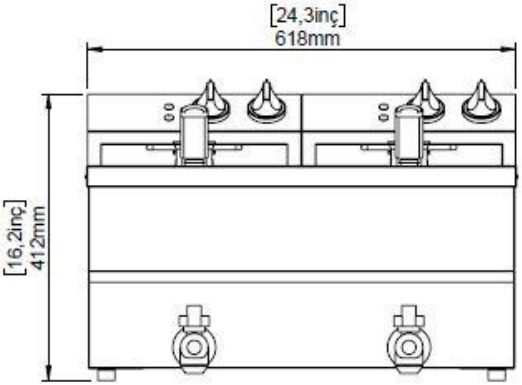

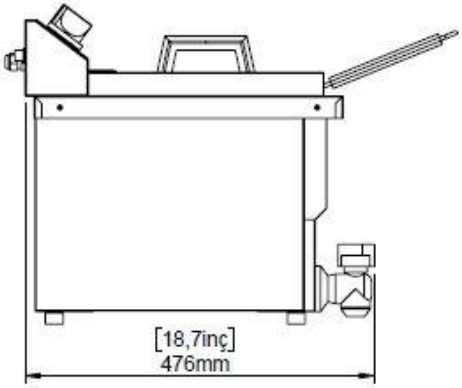

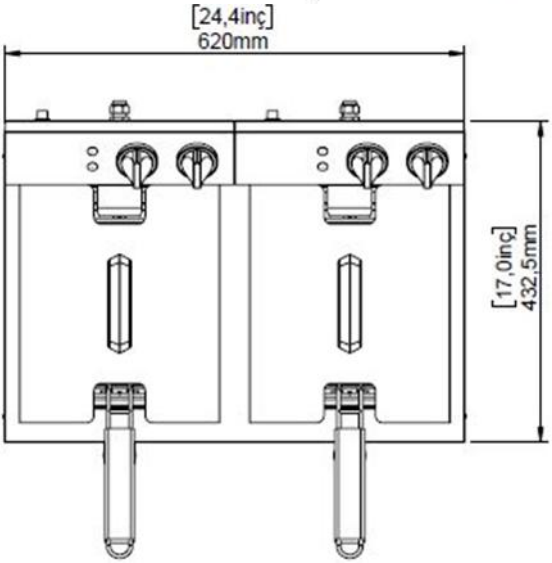

TRANSPORTATION

*This appliance can be moved by hand from area to area. Do not drop the appliance while transporting.

UNPACKING

*Please unpack the package according to the security codes and ordinances of current country and get rid from the pack.Parts which contacts with food are produced by stainless steel. All plastic parts are marked by material's symbol.

*Please check that all the parts of appliance had come completely and if they are damaged or not during the shipping.

INSTALLATION

*Please place the product to straight and sturdy ground, please take necessary steps against possibility of overturn.

*Technician who will serve for installation and service for the appliance must be professional on this subject and must have installation and service licenses by the company.

*Connection to Electric Power Supply must be done by authorized person.

*Please be sure that the voltage connected to appliance must be equal with the voltage which is on appliance's label.

*This appliance must be connected to an earthed outlet in accordance with safety rules and standards.

*Appliance's earthing must be connected to earthing line on panel which is nearest to electric installation.

*Connection to the main fuse and leak current fuse must be done in accordance with the current regulations.

*If the location where electric fryers placed is covered with non-flammable heat Insulation material, the distance between them must be 5cm. Otherwise, it should be at least 20 cm & the appliance should not be operated under chimney hood.

SAFETY INSTRUCTIONS

*Do not use the appliance in insufficient lighted place.

*Do not touch the moving attachments while the appliance operates.

*Do not install the appliance in the presence of flammable or explosive materials.

*Do not operate the appliance when the machine is empty.

*Do not load so less or more than appliance's capacity.

*Do not attempt to use the appliance without suitable protective equipment.

*Because of any reason if there is a fire or flame flare where the appliance is used, turn off all gas valves and electric contactor switch quickly and use fire extinguisher .Never use water to extinguish the fire.

*All the damages because of not having earthing connection will not be on warranty.

*Level of oil must not be less than minimum level. Otherwise it can be ignited.

*Level of oil must not be more than maximum level. Otherwise the oil that overflows from fryer may cause combustion.

*Do not put the unstrained and frozen foods into the hot oil.

Clearance Requirements

- Minimum clearance from combustible construction: 6" (15 cm) from the sides and back of the fryer
- Minimum clearance from surface flames from adjacent equipment: 16" (40.6 cm)

Environment Requirements

- Do not install under combustible materials.
- Should be installed under a hood in accordance with the latest
- edition of the Standard for Ventilation Control and Fire Protection of
- Commercial Cooking Operations, NFPA 96.
- Locate the fryer in a place where it cannot be pushed off the
- countertop.
- Keep the area surrounding the fryer clear of combustible materials.
- Keep the area at the front of the fryer clear for unobstructed access during operation.
- Do not plate adjacent to a heat producing appliance

Electrical Requirements

- Each frying head requires a dedicated circuit. Some models are supplied with two individual power cords. Each cord must be plugged into a dedicated circuit that matches the rating on the nameplate found on the back of the fryer.

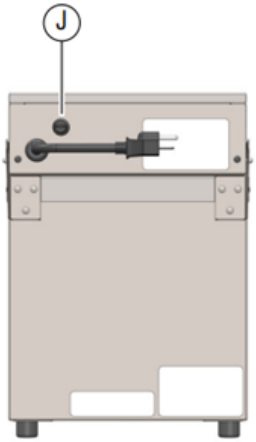

A **Night Cover.** Covers the well and oil when the fryer is not in use.

B **Baskets.** Hold the food to be fried.

C **On/Off Switch.** Illuminates when the switch is on the ON position

D **Temperature Control Dial.** Set the temperature of the oil.

F **Basket Hook.** Holds the basket to allow excess oil to drain from food.

G **Maximum Oil Level.** Do not fill with oil above this mark because this may cause oil to overflow the well after the basket of food has been added.

Minimum Oil Level. Do not operate with oil below this level as the oil may overheat and could ignite, causing a fire.

H **Drain Valve.** Drains the oil.

I **Heating Element.** Heats the oil.

J **Over Temperature Reset Switch.** Refer to the Troubleshooting section.

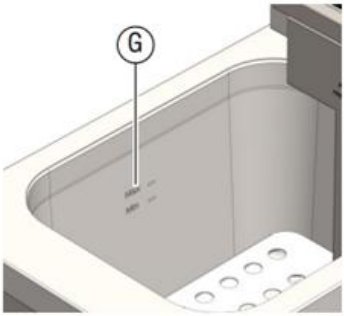

Add Oil to the Wells

NOTICE: Do not pour oil into an empty well when the fryer is hot.

Tips:

- Use a high-quality oil that does not break down quickly. For example: corn or peanut oil.
- Strain oil daily.
- Add fresh oil as necessary to maintain the oil level.

1. Before each use, check the oil level in each well to make sure it is between the minimum and maximum fill lines.

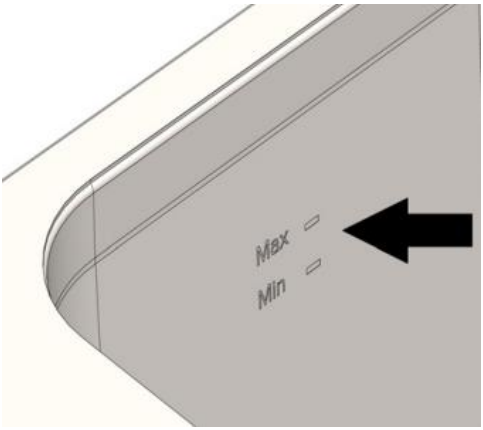

2. Verify the drain valve(s) are in the closed position

3. If oil needs to be added, remove baskets from well. Add oil or shortening to well until the oil is between the minimum and maximum fill lines. DO NOT overfill the well.

NOTICE: Melt shortening at 125°F. Melting shortening at temperatures above 125F may trip the high limit control. After shortening has melted, set the dial to the frying temperature.

Pre-Heat the Oil

For dual fryers, each well operates independently and may be set to different temperatures.

Note: The fryer head must be in the down position. If it is not, the fryer will not heat.

1. Plug the fryer into a grounded electrical outlet that matches the rating on the nameplate found on the back of the fryer. NOTICE: Using a voltage other than the nameplate rated voltage will cause damage to the unit. Incorrect voltage, modification to the power cord or electrical components can damage unit and will void the warranty.
2. Using the Power Switch, press the “I” part of the switch to turn the fryer on.
3. Rotate the dial to desired temperature.

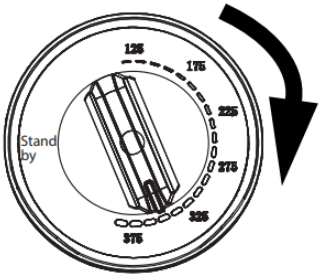

Food	Suggested Temperature
French fries	375°
Waffle fries	
Potato chips	
Tater Tots®	
Onion rings	
Chicken wings	350°
Breaded fish	
Shrimp	

1. Place food into the basket(s).

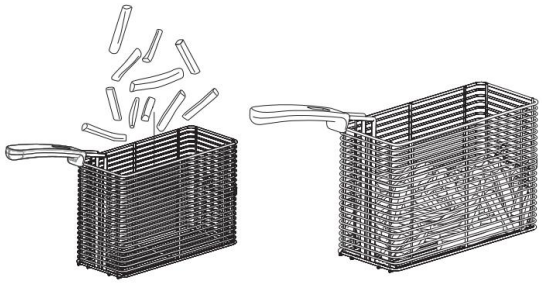

- Fill the basket 1/3 to 1/2 full
- Distribute the food evenly in the basket

NOTICE: Overfilling baskets could cause hot oil to overflow.

2. Carefully lower the basket(s) into the cooking oil.

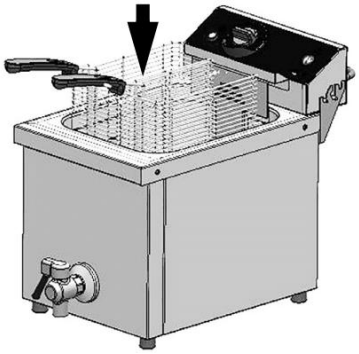

3. When frying is complete, remove the basket(s) from the oil and set on the basket hook to allow excess oil to drain from the food.

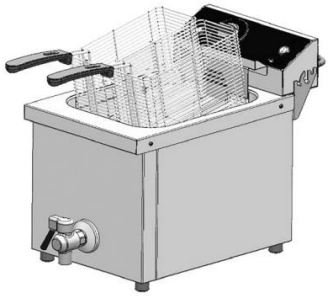

CAUTION

Burn Hazard
Do not touch hot liquid or heating surfaces while unit is heating or operating.

Hot liquids and food can burn skin. Allow the hot liquid to cool before handling. Do not drop or spill water into hot oil as it will spray or splatter the hot oil out of the tank.

WARNING

Electrical Shock Hazard
Keep water and other liquids from entering the inside of the equipment. Liquid inside the equipment could cause an electrical shock.

Do not spray the unit or controls with water or cleaning products. Liquid could contact the electrical components and cause a short circuit or an electrical shock. Do not use unit if power cord is damaged or has been modified.

NOTICE: Hand wash only. Do not wash fryer components in a dishwasher.

NOTICE: Do not use abrasive materials, scratching cleansers or scouring pads to clean the equipment. These can damage the finish.

Clean this equipment daily.

4. Allow the excess oil to drain back into the well before transferring the food to a serving dish or holding area.

5. Press to turn off the fryer.

6. Place the night covers over the fryer wells when the fryer is not in use.

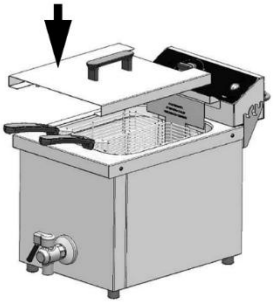

For Best Results

Food	Tips
All Foods	• Fill baskets 1/3 to 1/2 full. Do not over fill. • Place food so that it can circulate in the boiling oil. • Select pieces of food that are the same shape and size. • Skim the oil often. • Shake the basket often while frying.
Frozen Foods	• Remove ice crystals from frozen food. Ice crystals may cause oil to splatter. • Dry or drain wet food before placing into the basket.
Batter Dipped Foods	• Lower the basket into the oil, then use tongs to place individual pieces into the oil

CLEANING & MAINTENANCE

➢ **CLEANING AND MAINTENANCE AFTER EVERY USE**

- Always turn off the appliance and disconnect from the power supply before cleaning.
- Clean the outer surface of the appliance with a wet cloth and chrome shiner.
- Do not use abrasive cleaning chemicals as these can leave harmful residues.
- Do not clean the appliance by spraying water directly,otherwise electric motor may get damaged.
- While cleaning the inside of the fryer, lift the heater handle, unsettle the heaters that are in the tank and take them to vertical position. Take off the baskets and filter that are in the tank.

➢ **PERIODIC CLEANING AND MAINTENANCE**

- Qualified person should do maintenance.
- Get the periodic maintenance of the appliance once every 15 days.
- Clean the oil tank periodic times. Fill the tank with water and heat. This process will help to remove frozen and sticked oil.
- Maintenance of the appliance’s contactor Should be done by compressed air according to frequency of use.

CLEANING & MAINTENANCE

Clean this equipment daily.

1. Press to turn off the fryer.
2. Unplug the fryer. For fryers with two power cord, both cords must be unplugged.

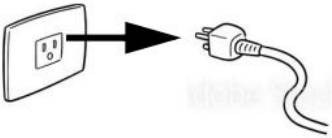

3. Allow the fryer and oil to cool completely.
4. Place a 3 gallon or larger metal container under the drain valve.
5. Lift drain valve handle up and slowly rotate it to the open position.

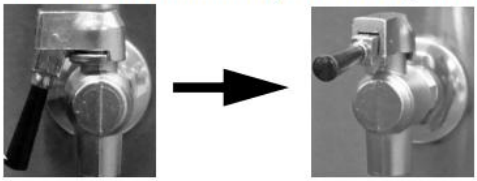

6. After the oil has drained, close the drain valve.

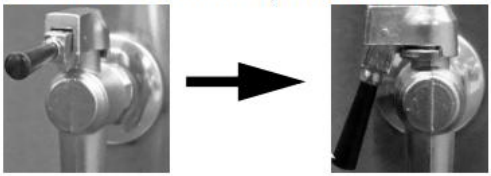

7. Filter or discard the used oil.
8. Remove the baskets from the well.
9. Wash the baskets in hot soapy water. Rinse thoroughly.

EXPLODED PARTS DIAGRAM

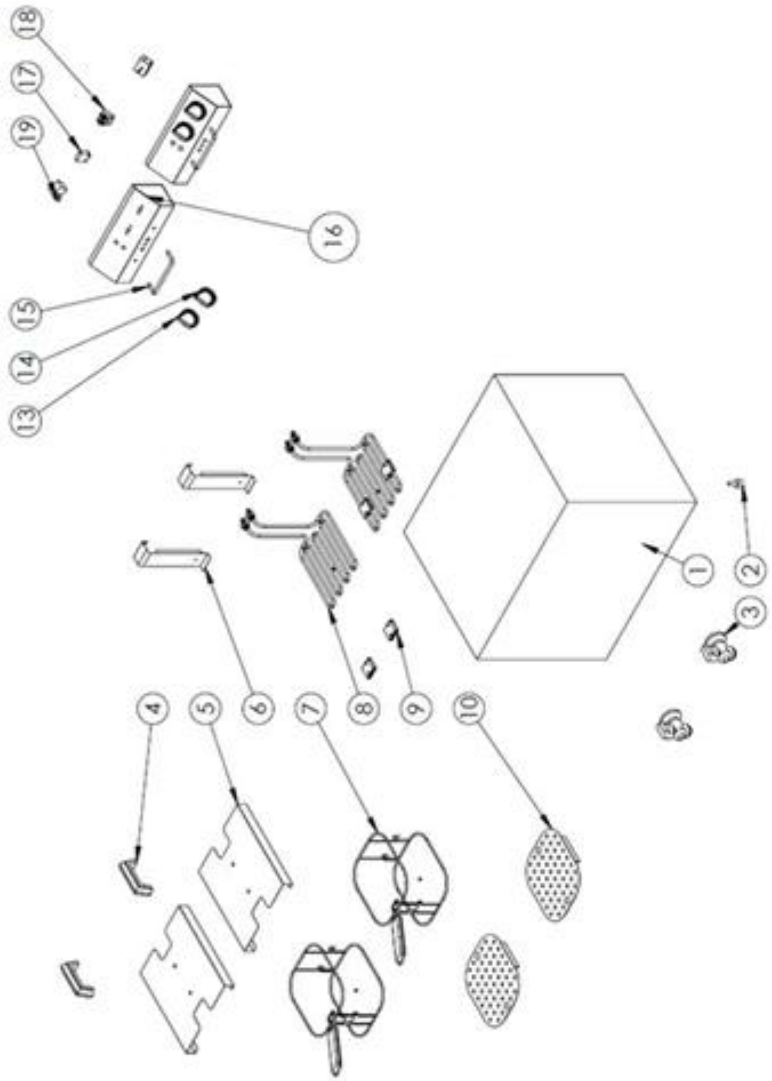

PARTS LIST

#	Part Description	Part #
1	CHASSIS	-
2	FOOT	JP.M.AKS-AYK-PLS-002
3	TAP	JP.M.MEK-TES-MSL-005
4	KULP	M.AKS-KLP-BKL-010
5	COVER	YSC-KNX.JP-LZ-0030
6	RESISTOR HOUSING	YSC-KNX.JP-LZ-0032
7	BASKET	M.AKS-SPT-INX-024
8	RESISTANCE	M.ELK-RZS-BRU-FRT-006
9	RESISTANCE SUPPORT SHEET	YSC-KNX.JP-LZ-0032
10	BASKET LAYER	YSC-KNX.JP-LZ-0042
13	THERMOSTAT BUTTON	JP.M.AKS-DGM-MUH-001
14	0-1 SWITCH	M.ELK-SLT-EGO-001
15	BASKET HANGER SHAFT	YTL-KNX.JP-KS-0011
16	PANEL SHEET	YSC-KNX.JP-LZ-0029
17	SWITCH	M.ELK-SWC-EMAS-002
18	THERMOSTAT 60-200°C	JP.M.ELK-MEK-TRM1-008
19	230°C HIGH LIMIT	M.ELK-MEK-LMT-006

ELECTRIC CIRCUIT DIAGRAM

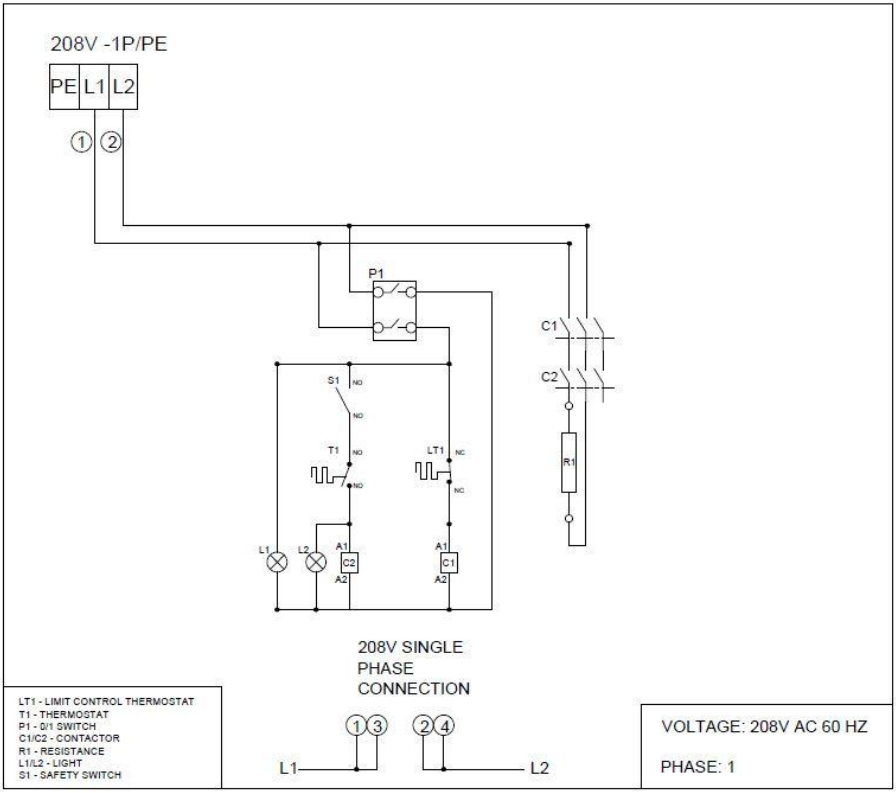

Warranty & Service

BakeMax provides a 1-Year Limited Parts and Labor warranty on most items, there are select items which carry a Limited 2-Year Warranty. Extended Warranty is available on some products. Please contact us for details. The Warranty is not transferable and is limited to original installation of equipment sold by BakeMax for the original user.

For all Warranty Claims, Proof of Purchase and/or Serial Number is required. Once the machine is approved, BakeMax will provide our customers with on-site Warranty Coverage on all equipment more than 100lbs. BakeMax assumes no responsibility for down time or loss of product. Repairs must be Pre-Authorized by BakeMax and have a Service Authorization Number issued prior to commencing Warranty Service.

Warranty begins 10-Days after shipping from warehouse; delays in installation which would extend the Warranty must be Approved. All equipment must be installed and connected by Qualified Professionals in accordance with the Manual Specification. Products shipped are to be inspected at time of delivery, the receiver is responsible for inspection.

Any abuse or improper use of the equipment will void the warranty. This includes failure to follow all cleaning instructions, improper installation, improper maintenance, failure to follow capacity charts, improperly wired electrical connections. The Warranty does not apply to abuse, willful or accidental damage, or to products used for other than their intended purpose. Normal wear parts such as Accessories, Attachments, or Electrical Components such as Fuses, Bulbs, Elements, and Switches carry a 90-Day Warranty only.

Bench Warranty (Machines Weighing 100 lb. or less)

Once the machine is Approved for Warranty Service, if the machine requires Warranty work in less than 30 days of purchase date, BakeMax will pay all shipping charges. Once the machine is received and repaired it will be returned to the user at BakeMax expense. Freight Damages during return shipping is the responsibility of the owner of the machine.

The following is not covered under the BakeMax Warranty:

1. Overtime Labor Rates are not covered by BakeMax.
2. All parts will be shipped via Ground Courier only; If Express Shipping is required, it will be the responsibility of the Customer or Dealer.
3. Travel for Warranty Service is covered up to 100 Miles /160 Km Roundtrip, any further milage will be the responsibility of the Customer or Dealer.
4. There is no on-site Warranty Service for Residential Addresses or addresses outside of the contiguous United States (*Lower 48)* or Canada.

*****BakeMax machines sold outside of the contiguous United States (Lower 48), or Canada will carry 1-Year Parts Warranty only.***

Questions? OEM Parts?
Toll Free: 1-800-565-2253
Email: Info@BakeMax.com
www.BakeMax.com

BakeMax®
www.BakeMax.com