MASTER-BILT®
Refrigeration Solutions

QUICK SHIP
Walk-In Coolers & Freezers With Matching Refrigeration Systems

FEATURES

- Available in widths of 6'-12' in 1' increments
- Depths of 6'-20' in 1' increments
- Heights: 6'7", 7'7" and 8'7" with floor, 7'4" and 8'4" floorless for single compartment and combinations
- Combination cooler/freezers are offered as:
  - >All with-floor or all less-floor
  - >Both compartments equal size (6'-20' width for each in 1' increments)
- Indoor or outdoor models
- Available with UL-listed indoor or outdoor Split-Pak A2L™ remote refrigeration systems or Capsule Pak ECO™ self-contained systems (systems ordered separately; Capsule Pak ECO systems available for walk-in compartments under 14' in length)
- Temperatures: +37˚F, -10˚F
- Full 4" thick panels foamed-in-place with EPA-compliant polyurethane insulation
- 26 gauge corrosion resistant stucco embossed coated steel on all surfaces except interior floor
- Smooth aluminum interior floor (models with floor)
- Floorless models supplied with NSF listed vinyl sealers
- 26", 30" or 36" wide self-closing doors
- Doors are shipped with (2) 2-foot wide filler panels for field-configurable installation along any wall
- Deadbolt locking handle with independent key/padlock feature and inside safety release
- Two heavy duty cam-lift hinges per door, top hinge field adjustable with locking set screw
- Spring loaded hinge and spring actuated door closer
- Magnetic gasket
- Combination digital thermometer and light switch
- Floor double sweep gasket
- Perimeter door heater wire
- Heated air vents standard in freezer door sections
- High output low profile LED light positioned above door to prevent interference with shelving or product
- NSF listed, UL flame spread 25 or less for all foam cores on all panels; UL electrical listing on door sections
- UL & C-UL electrical listing on all refrigeration systems*
- UL NCKL listed certifying compliant walk-ins are ignition protected
- City of Houston listed
- CN UL flame spread listed
- California State listed
- Oregon State listed
- USDA accepted
- 15 year panel warranty
- 18 months parts and labor warranty

OPTIONS & ACCESSORIES

(Most options available two weeks from receipt of order. Please contact us for specific questions.)

- ❑ Outdoor membrane roof systems
- ❑ Door rain hoods
- ❑ Interior and/or exterior 30" high stainless steel or aluminum diamond tread door kick plates
- ❑ Interior and exterior ramps for with-floor models
- ❑ Leak detector/alarm (may be a requirement in some areas)
- ❑ Extra LED lights (shipped loose)
- ❑ Strip curtains (shipped loose)
- ❑ Non-skid floor strips (shipped loose)
- ❑ Shelving systems
- ❑ 14" x 24" viewport
- ❑ Heavy-duty flooring with plywood underlayment

*C-UL is Underwriters Laboratories Safety Certification Mark which indicates that UL has tested the equipment to applicable CSA Standards.

908 Highway 15 N • New Albany, MS • 800-647-1284 • master-bilt.com

WALK-IN SPECIFICATIONS

Quick Ship walk-ins are built of modular panels, and are insulated with foamed-in-place EPA-compliant polyurethane insulation. Each panel is designed to ensure ease of installation, long term reliability and high insulating efficiency.

A. All panels are manufactured with male and female mating rails to ensure proper alignment during installation. The polyurethane insulation wraps around the return bend metal seams on both sections to create a lightweight panel of exceptional strength and durability.

All panels are a full four inches thick, metal clad and foamed-in-place with EPA-compliant polyurethane insulation for superior R-value.

The minimum R-values for 4" HFO panels are:

- Cooler:
  - Walls/Ceilings..... R-value 25
  - Doors ..... R-value 25
- Freezer:
  - Walls/Ceilings..... R-value 32
  - Doors ..... R-value 32
  - Floors ..... R-value 28

B. The foamed-in-place metal cam locking fasteners ensure an airtight seal for maximum energy efficiency.

C. Quick Ship panel gaskets around the outer perimeter of the panel are continuous, without cuts or breaks at corners. Because gaskets are foamed-in-place as an integral part of the panel, they cannot fall off or pull off during shipment or installation.

D. Panels lock together tightly to assure an energy efficient walk-in.

E. Edge caps for ends of floor and ceiling panels are foamed-in-place rather than overlapped or mechanically fastened. Edge caps cannot come loose, and they stay in place through the life of the walk-in.

F. Panel Finishes: Interior and exterior complete to be 26 gauge corrosion resistant stucco embossed coated steel. Models supplied with a floor will include a smooth aluminum interior floor surface.

A.

B.

C.

D.

E.

F.

Available in Both Single Compartment Walk-ins or Two-Compartment Combinations

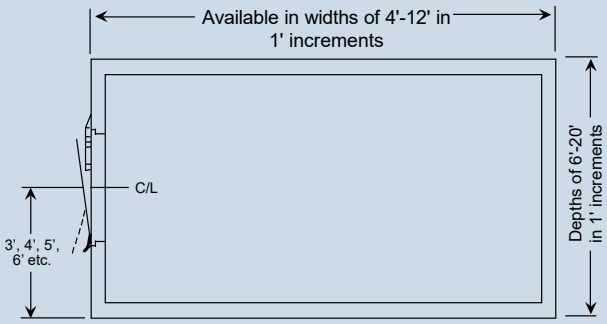

Note: The walk-in door can be located on any wall.

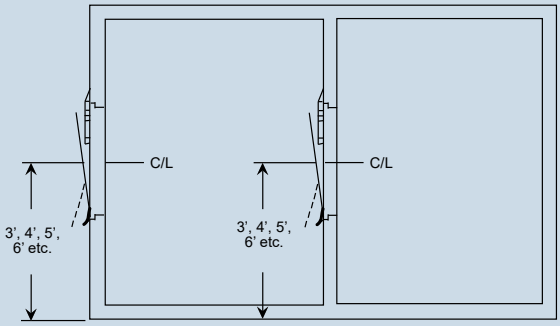

Note:
- Both compartments must be equal sizes
- Must be all with-floor or all less-floor
- With cooler/freezer layouts, the partition door must open into the cooler compartment.

DOOR CONSTRUCTION

Door sections are factory tested to assure proper fit, performance and alignment. All doors feature a stepped profile design that serves as a barrier to air flow which results in an energy efficient door system.

Each Quick Ship walk-in compartment is equipped with a 26", 30" or 36" wide door opening. The height of the door opening varies with the series of Quick Ship walk-in ordered. The Standard Series (6'7" high) has a 66" high door opening. The 74, 77, 84 and 87 Series walk-ins have a 78" high opening. Doors are self-closing, flush mounted, infitting and feature a single piece extruded construction which is permanently foamed-in-place.

Doors are available with right or left side hinges and include two field adjustable cam-lift hinges with locking set screw, spring loaded top hinge, spring actuated door closer, deadbolt locking handle with independent key/padlock feature and inside safety release. The doors are pre-hung in a four foot wide frame panel and are equipped with replaceable perimeter heater wire, magnetic stainless steel trim, digital thermometer, above door LED light fixture and switch with exterior pilot indicator light.

The door section is completely pre-wired within concealed conduit inside the door frame panel. The 120/60/1 electrical is field wired to a junction box which is surface mounted on the interior frame above the LED light fixture. Door sections are 4" thick, metal clad and foamed-in-place with EPA-compliant polyurethane insulation.

Hinges and door handles are mounted to heavy-duty tapping plates. Each door section is complete with a fiberglass reinforced plastic heated threshold.

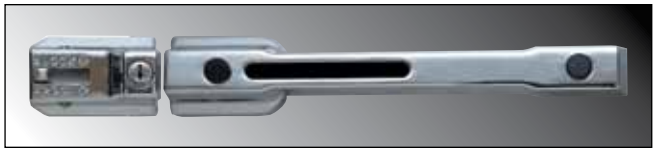

Deadbolt-locking handle

Spring actuated door closer

LED light fixture

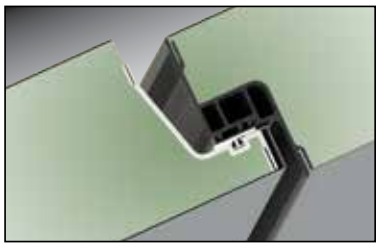

Doors feature a stepped profile design

Digital thermometer/light switch

Doors designed and certified for use in walk-in cooler applications

DOOR MODEL NUMBER	ENERGY CONSUMPTION (KWH/DAY)	DOOR SURFACE AREA (SQ. FT.)	ELECTRICAL	WATTS	AMPS
QS26X59	2.30	12.00	120/60/1	97.73	0.81
QS26X66	2.37	13.40	120/60/1	100.80	0.84
QS26X78	2.49	15.80	120/60/1	106.07	0.88
QS30X66	2.46	15.27	120/60/1	102.56	0.85
QS30X78	2.60	18.00	120/60/1	107.80	0.90
QS36X66	2.60	18.06	120/60/1	105.20	0.88
QS36X78	2.76	21.29	120/60/1	110.50	0.92

Doors designed and certified for use in walk-in freezer applications

DOOR MODEL NUMBER	ENERGY CONSUMPTION (KWH/DAY)	DOOR SURFACE AREA (SQ. FT.)	ELECTRICAL	WATTS	AMPS
QS26X59	6.48	12.00	120/60/1	189.69	1.58
QS26X66	6.68	13.40	120/60/1	196.07	1.63
QS26X78	7.01	15.80	120/60/1	207.07	1.73
QS30X66	6.94	15.27	120/60/1	199.75	1.66
QS30X78	7.32	18.00	120/60/1	210.80	1.76
QS36X66	7.33	18.06	120/60/1	205.25	1.71
QS36X78	7.78	21.29	120/60/1	216.30	1.80

DOOR LOCATION

Quick Ship walk-ins feature field-configurable door placement. Smaller panels ship with the walk-in to enable this flexibility (except where interior ramps are required, in which case door location must be specified to ensure alignment with the ramp).

Possible door locations are shown below. The number of locations will increase with the size of the walk-in.

Walk-ins are shipped with (2) 2-foot panels per door for use on the door wall(s), allowing the installer to select the position on-site.

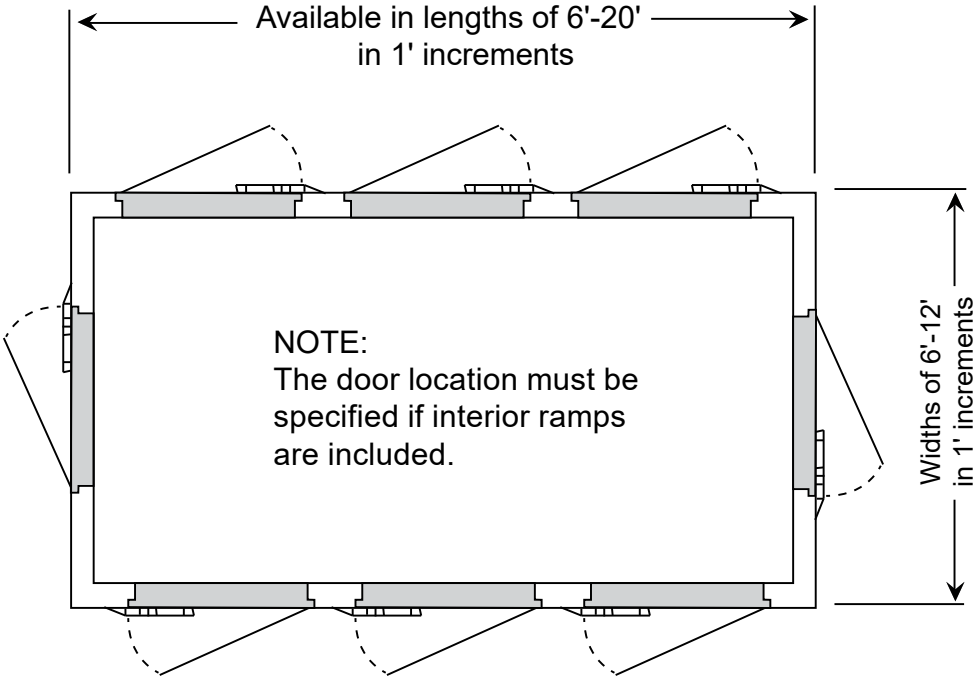

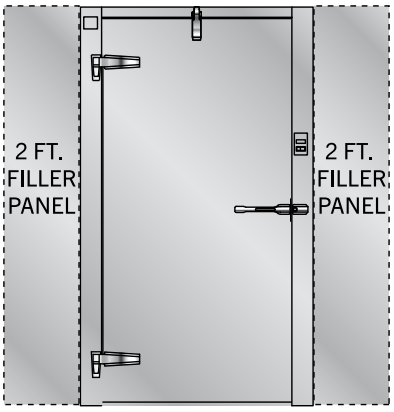

STANDARD FILLER PANELS

Two-foot wide filler panels shipped with each Quick Ship provide flexibility for last-minute layout changes by allowing doors to be placed in any location along a wall. Use both or one panel as needed.

FLOOR CONSTRUCTION

Floor panels (when supplied) are similar in construction to the wall panels except they are made to withstand uniformly distributed floor loads of up to 800 pounds per square foot. The interior floor metal is smooth aluminum.

Optional heavy-duty flooring, rated at 1000 psf, features plywood underlayment to support high-volume foot traffic and light rolling carts.

The 74 and 84 Series floorless models are supplied with a patented vinyl floor sealer to stop conductivity at floor level. This unique sealer sits flat on existing floors and fits tightly against the interior/exterior wall panels. The walk-in wall panel is supported on the shoulder of the sealer so the foam edge is free of compressing weight. The vinyl floor sealer is NSF listed.

Floorless models are supplied with a patented vinyl floor sealer

SPLIT-PAK™ OR SPLIT-PAK A2L™ REMOTE REFRIGERATION SYSTEMS

c UL us

CONDENSING UNITS CERTIFIED FOR INDOOR & OUTDOOR USE

R449A OR A2L
REFRIGERANT OPTIONS

- Split-Pak systems feature a condensing unit and evaporator coil sized to fit requirements
- All components are pre-wired and factory assembled on a galvanized steel angle leg base
- Evaporator coils are ready to mount in position and are available in air (off cycle) defrost for coolers and electric defrost for freezers
- Each coil is also furnished with a pre-installed expansion valve and room thermostat mounted and wired
- Electric defrost coils feature defrost termination-fan delay controls and drain line heaters
- Standard energy efficient EC motors

SPLIT-PAK™ REMOTE REFRIGERATION SYSTEM SPECIFICATIONS

Remote refrigeration systems available for this program are limited to the Split-Pak™ condensing units and evaporator coils on pp. 6-7 only. Condensing units are factory pre-wired and pre-assembled.

All units are provided with matching evaporator coils. Remote 2 H.P. through 6 H.P. units are available with either one (1) or two (2) matching evaporator coils.

Remote 1/2 and 3/4 H.P. units are available in 230 volt, 60 cycle, one phase only. Units ranging from 1 to 4 H.P. are available in 230 volt, 60 cycle, one phase or 208/220 volt, 60 cycle, three phase. Five and 6 H.P. units are available in 208/220 volt, 60 cycle, three phase only.

Outdoor remote condensing units under this program will be provided with weather kits containing a weather hood with unit base and a low ambient kit.

MEDIUM TEMP R-448A/R-449A CONDENSING UNITS

(Dedicated medium temp outdoor condensing units meet the DOE requirement of a minimum AWEF rating of 7.61 Btu/W-h).

COND. UNIT MODEL*	H.P.	COMPRESSOR MODEL	BTUH @ 25°F SUCTION TEMP. 90°F AMBIENT	UNIT CONNECTION SIZES		BASE SIZE†	RECEIVER PUMP DOWN CAPACITY @ 90%	SHIP WT. (LB/KG)	MCA††	MOP††	RLA††	LRA††
				LIQUID	SUCTION							
HERMETIC												
MHMD005AB	0.5	RST45C1E-CAV	5,701	3/8	5/8	M1	8.1	180/82	18.8	20	4.6	26.5
MHMD007AB	0.75	RST55C1E-CAV	6,958	3/8	5/8	M1	8.1	180/82	18.8	20	6.1	33.7
MHMD010AB	1	RST70C1E-PFV	8,658	3/8	7/8	M1	8.1	180/82	18.8	20	6.9	46
MHMD010AC	1	RST70C1E-TA5	8,975	3/8	7/8	M1	8.1	180/82	18.8	20	4.9	36
SCROLL												
MSMD015AB	1.5	ZS11KAE-PFV	12,768	1/2	7/8	M2	12	240/109	25	30	11.3	55
MSMD015AC	1.5	ZS11KAE-TF5	12,884	1/2	7/8	M2	12	240/109	19.1	20	9.3	58
MSMD017AB	1.75	ZS13KAE-PFV	14,330	1/2	7/8	M2	12	240/109	25	30	10.8	56
MSMD017AC	1.75	ZS13KAE-TF5	14,469	1/2	7/8	M2	12	240/109	18.8	20	8.7	58
MSMD020AB	2	ZS15KAE-PFV	16,884	1/2	7/8	M2	12	240/109	31.3	35	14.1	68
MSMD020AC	2	ZS15KAE-TF5	17,060	1/2	7/8	M2	12	240/109	25	30	9.6	58
MSMD025AB	2.5	ZS19KAE-PFV	19,376	1/2	7/8	M2	12	240/109	31.8	35	16.2	75
MSMD025AC	2.5	ZS19KAE-TF5	19,353	1/2	7/8	M2	12	240/109	31.3	35	12.3	73

LOW TEMP R-448A/R-449A SCROLL CONDENSING UNITS

COND. UNIT MODEL*	H.P.	COMPRESSOR MODEL	BTUH @ -20°F SUCTION TEMP. 90°F AMBIENT	UNIT CONNECTION SIZES		BASE SIZE†	RECEIVER PUMP DOWN CAPACITY @ 90%	SHIP WT. (LB/KG)	MCA††	MOP††	RLA††	LRA††
				LIQUID	SUCTION							
MSLD010AB	1	ZF03KAE-PFV	2,949	3/8	7/8	M1	8.1	180/82	12.5	15	6.1	42.3
MSLD010AC	1	ZF03KAE-TF5	2,921	3/8	7/8	M1	8.1	180/82	9.1	15	4.1	31.7
MSLD020AB	2	ZF06K4E-PFV	7,164	3/8	7/8	M2	12	240/109	25	30	13.6	61
MSLD020AC	2	ZF06K4E-TF5	6,793	3/8	7/8	M2	12	240/109	18.8	20	8.3	55
MSLD025AB	2.5	ZF08K4E-PFV	8,946	3/8	7/8	M3	17.7	250/114	32.6	35	16.4	73
MSLD025AC	2.5	ZF08K4E-TF5	8,699	3/8	7/8	M3	17.7	250/114	25	30	8.7	63
MSLD035AB	3.5	ZF11K4E-PFV	11,759	3/8	7/8	M3	17.7	250/114	38	45	20.7	109
MSLD035AC	3.5	ZF11K4E-TF5	11,958	3/8	7/8	M3	17.7	250/114	31.3	35	10.9	88
MSLD050AC	5	ZF15K4E-TF5	17,523	1/2	7/8	M5	17.7	250/114	38	40	17	123

• NOTES:
• 448A/449A compressors are shipped with P.O.E. oil.
• All "M" units include low ambient kit (crankcase heater, head pressure control valve) as standard feature.

*VOLTAGE KEY:
"B" suffix = 208-230 or 230 volt, one phase
"C" suffix = 200-230 or 208-230 volt, one phase

† See p. 10 for unit base drawings.
†† Electrical ratings for condensing unit only. See National Electrical Code if units are combined on a single circuit.

SPLIT-PAK™ REMOTE REFRIGERATION SYSTEM EVAPORATOR COIL SPECIFICATIONS

Each coil is furnished with a pre-installed expansion valve and room thermostat mounted and wired.

MEDIUM TEMP

EVAPORATOR MODEL	UNIT PART NO.	BTUH @ 25°F SUCTION TEMP.	NO. FANS	DIMENSIONS (in.)			SHIP WT. (LB/KG)	FAN AMPS
				L	W	H		
E1MD0060A-TA2	WL6A052SEAS	6,000	1	27	16	17	44/20	.8
E1MD0078A-TA2	WL6A066SEAS	7,800	1	27	16	17	47/21	0.8
E1MD0085A-TA2	WL6A073SEAS	8,500	2	44	16	17	52/24	1.6
E1MD0109A-TA2	WL6A094SEAS	10,900	2	44	16	17	55/25	1.6
E1MD0136A-TA2	WL6A117SEAS	13,600	2	44	16	17	58/26	1.6
E1MD0163A-TA2	WL6A141SEAS	16,300	3	60	16	17	72/33	2.4

LOW TEMP

EVAPORATOR MODEL	UNIT PART NO.	BTUH @ -20°F SUCTION TEMP.	NO. FANS	DIMENSIONS (in.)			SHIP WT. (LB/KG)	FAN AMPS	DEFROST AMPS
				L	W	H			
E1LD0049B-TE2	WL6E042DEAS	4,900	1	27	16	17	44/20	0.5	4.9
E1LD0076B-TE2	WL6E066DEAS	7,600	2	44	16	17	52/24	1	9.8
E1LD0088B-TE2	WL6E077DEAS	8,800	2	44	16	17	55/25	1	9.8
E1LD0106B-TE2	WL6E090DEAS	10,600	2	44	16	17	58/26	1	9.8
E1LD0124B-TE2	WL6E105DEAS	12,400	2	44	16	17	62/28	1	9.8

NOTE: Medium temp evaporator coils based on 12° T.D. Low temp coils based on 10° T.D.

VOLTAGE KEY:
"A" suffix = 115 volt, 60 cycle, one phase
"B" suffix = 208-230 volt, 60 cycle, one phase

SPLIT-PAK A2L™ REMOTE REFRIGERATION SYSTEM SPECIFICATIONS

Remote refrigeration systems available for this program are limited to the Split-Pak A2L™ condensing units and evaporator coils on pp. 8-9 only. Condensing units are factory pre-wired and pre-assembled.

All units are provided with matching evaporator coils.

Remote 2 H.P. through 3.5 H.P. units are available with either one or two matching evaporator coils.

Outdoor remote condensing units under this program are provided with weather kits containing a weather hood with unit base and a low ambient kit.

MEDIUM TEMP R-454C SCROLL CONDENSING UNITS

(Dedicated medium temp outdoor condensing units meet the DOE requirement of a minimum AWEF rating of 7.61 Btu/W-h).

COND. UNIT MODEL*	H.P.	COMPRESSOR MODEL	BTUH @ 25°F SUCTION TEMP. 90°F AMBIENT	VOLTAGE	UNIT CONNECTION SIZES		BASE SIZE*	RECEIVER TANK (LBS) PUMPDOWN 90%/90°F	SHIP WT. (LB/KG)	MCA**	MOP**	COMP RLA**	COMP LRA**
					LIQUID	SUCTION							
INDOOR MODELS													
MSMC010MBI	1.0	YB07KAE-PFV	8,099	208-230/60/1	3/8	7/8	M2	N/A	240/109	12.8	15	5.6	48
MSMC015MBI	1.5	YS11KAE-PFV	12,368		1/2	7/8	M2	N/A	240/109	22.0	25	11.3	55
OUTDOOR MODELS													
MSMC007MB	0.75	YB06KAE-PFV	6,540	208-230/60/1	3/8	7/8	M2	7.1	240/109	11.9	15	5.4	35.7
MSMC010MB	1.0	YB07KAE-PFV	8,099		3/8	7/8	M2	10.1	240/109	12.8	15	5.6	48
MSMC012MB	1.25	YS09KAE-PFV	10,596		1/2	7/8	M2	10.1	240/109	17.1	20	9.0	40.3
MSMC015MB	1.5	YS11KAE-PFV	12,368		1/2	7/8	M2	10.1	240/109	22.0	25	11.3	55
MSMC017MB	1.75	YS12KAE-PFV	14,092		1/2	7/8	M2	10.1	240/109	21.3	25	10.8	56

LOW TEMP R-454A SCROLL CONDENSING UNITS

COND. UNIT MODEL	H.P.	COMPRESSOR MODEL	BTUH @ -20°F SUCTION TEMP. 90°F AMBIENT	VOLTAGE	UNIT CONNECTION SIZES		BASE SIZE*	RECEIVER TANK (LBS) PUMPDOWN 90%/90°F	SHIP WT. (LB/KG)	MCA**	MOP**	COMP RLA**	COMP LRA**
					LIQUID	SUCTION							
INDOOR MODELS													
MSLA010MBI	1.0	YF03KAE-PFV	3,015	208-230/60/1	3/8	7/8	M3	N/A	250/113	12.5	15	5.4	42.3
MSLA015MBI	1.5	YF05KAE-PFV	4,888		3/8	7/8	M3	N/A	250/113	17.5	20	7.8	55
MSLA020MBI	2.0	YF06KSE-PFV	8,882		3/8	7/8	M3	N/A	250/113	27.1	35	14.7	73
MSLA025MBI	2.5	YF08KAE-PFV	8,900		3/8	7/8	M3	N/A	250/113	32.6	35	15.9	88
MSLA030MBI	3.0	YF09KSE-PFV	9,600		3/8	7/8	M3	N/A	250/113	33.1	35	16.3	109
OUTDOOR MODELS													
MSLA010MB	1.0	YF03KAE-PFV	3,015	208-230/60/1	3/8	7/8	M1	7.1	180/82	10.9	15	5.4	42.3
MSLA012MB	1.25	YF04KAE-PFV	4,165		3/8	7/8	M2	10.1	240/109	14.1	15	6.6	40.3
MSLA015MB	1.5	YF05KAE-PFV	4,888		3/8	7/8	M2	10.1	240/109	16.6	20	7.8	55
MSLA017MB	1.75	YF06KAE-PFV	6,793		3/8	7/8	M2	10.1	240/109	22.1	25	12.2	68
MSLA020MB	2.0	YF06KSE-PFV	8,882		3/8	7/8	M3	15.2	250/113	27.1	35	14.7	73
MSLA025MB	2.5	YF08KAE-PFV	8,900		3/8	7/8	M3	15.2	250/113	32.6	35	15.9	88
MSLA030MB	3.0	YF09KSE-PFV	9,600		3/8	7/8	M3	15.2	250/113	33.1	35	16.3	109
MSLA035MB	3.5	YF10KAE-PFV	12,000		3/8	7/8	M3	15.2	250/113	42.7	50	24.0	129

NOTE: compressors are shipped with P.O.E. oil.

*See p. 10 for unit base drawings.
**Electrical ratings for condensing unit only. See National Electrical Code if units are combined on a single circuit.

SPLIT-PAK A2L™ REMOTE REFRIGERATION SYSTEM EVAPORATOR COIL SPECIFICATIONS

Each coil is furnished with a LogiTemp® electronic controller system which regulates an electronic expansion valve and leak sensors.

MEDIUM TEMP R-454C EVAPORATOR COILS

EVAPORATOR MODEL	UNIT PART NO.	BTUH @ 25°F SUCTION TEMP.	VOLTAGE	NO. FANS	DIMENSIONS (IN.)			SHIP WT. (LB/KG)	FAN AMPS
					L	W	H		
E1MCK060A-MA	KLP106MA-S1E	5,910	115/60/1	1	30.25	16.5	17.25	47/21	1.0
E1MCK070A-MA	KLP107MA-S1E	7,000		1	30.25	16.5	17.25	49/22	1.0
E1MCK090A-MA	KLP209MA-S1E	8,700		2	46.25	16.5	17.25	70/32	2.0
E1MCK110A-MA	KLP211MA-S1E	11,400		2	46.25	16.5	17.25	74/34	2.0
E1MCK140A-MA	KLP214MA-S1E	13,700		2	46.25	16.5	17.25	78/35	2.0

LOW TEMP R-454A EVAPORATOR COILS

EVAPORATOR MODEL	UNIT PART NO.	BTUH @ -20°F SUCTION TEMP.	VOLTAGE	NO. FANS	DIMENSIONS (IN.)			SHIP WT. (LB/KG)	FAN AMPS	DEFROST AMPS
					L	W	H			
E1LAK040B-ME	KLP104LE-S2E	4,070	208-230/60/1	1	30.25	16.5	17.25	49/22	0.6	4.6
E1LAK050B-ME	KLP105LE-S2E	4,900		1	30.25	16.5	17.25	51/23	0.6	4.6
E1LAK060B-ME	KLP106LE-S2E	6,330		1	30.25	16.5	17.25	53/24	0.6	4.6
E1LAK070B-ME	KLP207LE-S2E	7,160		2	46.25	16.5	17.25	76/34	1.2	8.2
E1LAK090B-ME	KLP209LE-S2E	9,390		2	46.25	16.5	17.25	80/36	1.2	8.2
E1LAK110B-ME	KLP211LE-S2E	11,300		2	46.25	16.5	17.25	84/38	1.2	8.2
E1LAK140B-ME	KLP314LE-S2E	13,900		3	62.25	16.5	17.25	109/49	1.8	11.9

NOTE: Medium temp evaporator coils based on 12° T.D. Low temp coils based on 10° T.D.

SPLIT-PAK™ AND SPLIT-PAK A2L™ REMOTE CONDENSING UNIT BASE SPECIFICATIONS

BASE "M1"

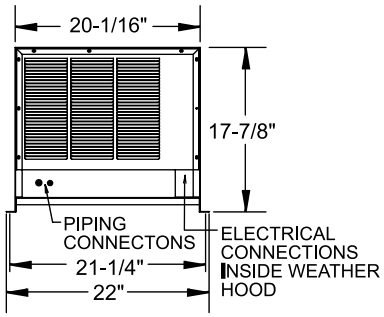

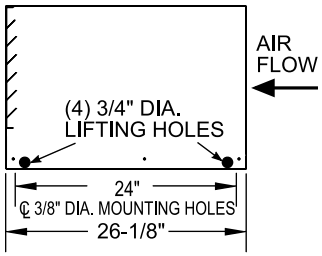

BASE "M2"

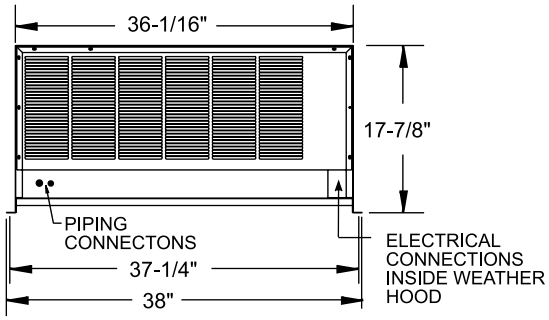

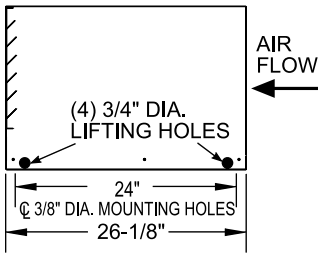

BASE "M3"

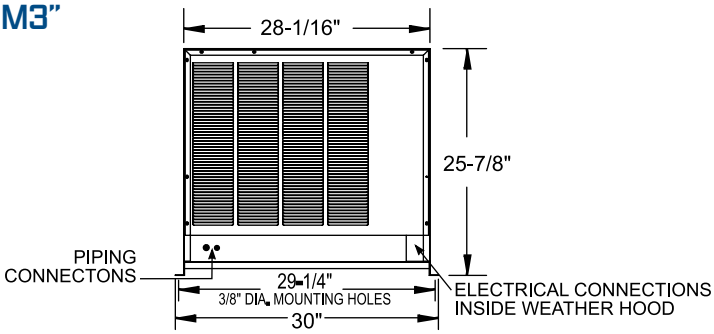

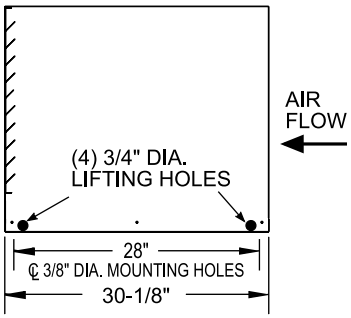

BASE "M5"

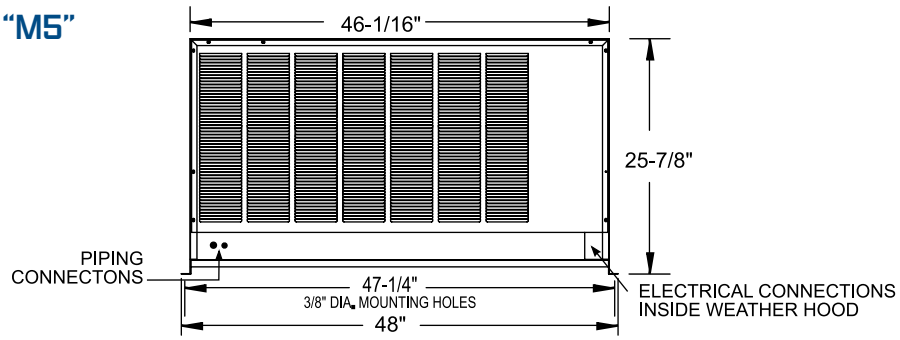

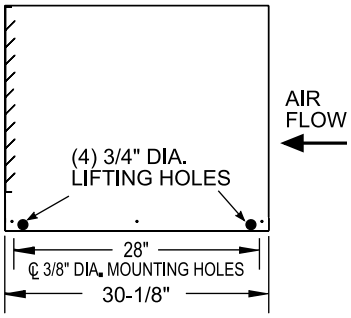

SELF-CONTAINED CAPSULE PAK ECO™ REFRIGERATION SYSTEMS

Indoor System

Outdoor System

R290 REFRIGERANT

PATENTED TECHNOLOGY
U.S. Patent No. 11,859,885

FEATURES

- Condensing unit and evaporator coil contained in a single housing ready to mount on top of your Master-Bilt walk-in
- Indoor and outdoor ceiling mount models
- Available for coolers or freezers
- Systems may be specified for walk-in rooms 14' long and under (excluding 10' x 14' freezers)
- Two temperatures: +37˚F and -10˚F
- Air cooled condensing unit
- Automatic condensate evaporator on indoor systems
- LogiTemp® electronic controller system
- Electronic control provided for automatic defrost on both coolers and freezers
- All models feature standard cord and plug eliminating the need for field connection
- Outdoor coolers incorporate a patent pending heater design for low ambient conditions to keep walk-in temperatures at the set point
- UL and C-UL electrical listing on complete Capsule Pak ECO refrigeration systems*
- DOE, CARB and SNAP compliant
- 18 months parts and labor warranty (optional 5 year compressor warranty available)

STANDARD LOGITEMP® ELECTRONIC CONTROLLER

- More precise and reliable temperature control compared to all-mechanical systems
- Digital readout and four button overlay for easy setup and navigation
- Demand Defrost technology that initiates defrosts only as needed for further energy savings (optional on Capsule Pak ECO cooler models)
- LogiTemp provides online data for instant notification of error codes and settings (standard feature on outdoor systems, optional on indoor)

* C-UL is Underwriters Laboratories Safety Certification Mark which indicates that UL has tested the equipment to applicable CSA Standards.

CAPSULE PAK ECO™ REFRIGERATION SYSTEM SPECIFICATIONS

Capsule Pak ECO™ refrigeration systems consist of a single assembly pre-charged condensing unit and evaporator coil factory assembled, wired, tested and ready for insertion into a factory prepared walk-in ceiling opening. All systems are UL and C-UL listed and DOE compliant.

Capsule Pak ECO systems are ceiling mount and available for indoor or outdoor installations. Models are available for interior compartment design temperatures of +37˚F and -10˚F. Installation is fast and easy with no plumbing required on indoor units.

A flush evaporator coil keeps all components outside the walk-in storage area allowing more storage inside. The evaporator enclosure is constructed utilizing foamed-in-place polyurethane insulation and equipped with a removable, gasketed access cover. High efficiency EC evaporator fan motors circulate air throughout the walk-in.

Indoor Capsule Pak ECO models incorporate a condensate pan with wicking pads and forced air from the condenser fan to evaporate condensate. Outdoor models feature crankcase heaters for low ambient conditions.

Note: Allow minimum of 4" clearance above and 24" on each side of the system for installation. Consideration should be given to accessibility for service and free condenser air flow. Consult factory with installation questions.

REFRIGERATION SYSTEM PHYSICAL SPECIFICATIONS

050 & 075 MODELS

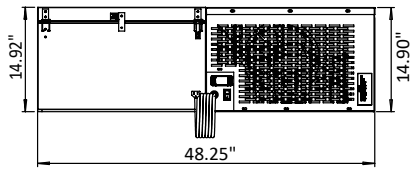

SIDE VIEW

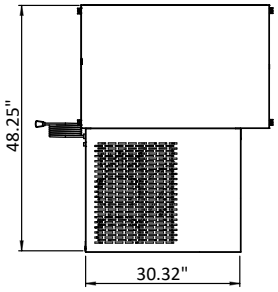

INDOOR PLAN VIEW

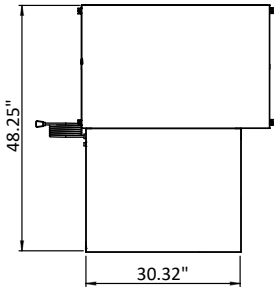

OUTDOOR PLAN VIEW

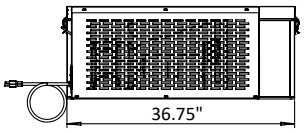

INDOOR ELEVATION VIEW

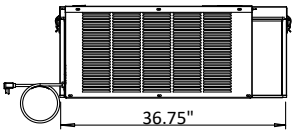

OUTDOOR ELEVATION VIEW

100, 150 & 175 MODELS

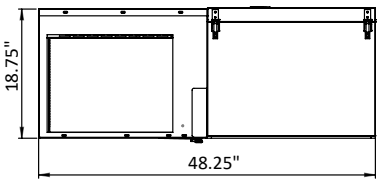

SIDE VIEW

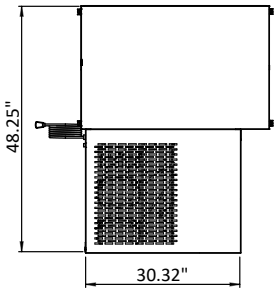

INDOOR PLAN VIEW

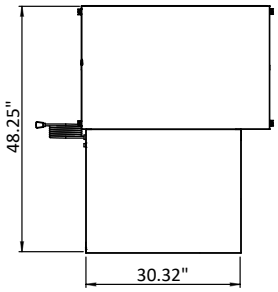

OUTDOOR PLAN VIEW

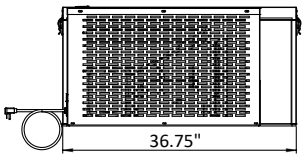

INDOOR ELEVATION VIEW

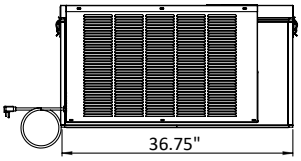

OUTDOOR ELEVATION VIEW

NOTE:
- Consideration must be given to accessibility for service and free condenser air flow. Consult factory with installation questions.
- Proper condensing unit ventilation must be provided. The factory recommends 200cfm of fresh air in the surounding area with ample clearance around the condensing unit.
- Subject to change without notice.

CAPSULE PAK ECO™ REFRIGERATION SYSTEM TECHNICAL DATA

CAPSULE PAK ECO™ INDOOR REFRIGERATION SYSTEMS (CORD AND PLUG CONNECTED)

MODEL	REFRIGERANT	REFRIGERANT CHARGE (OZ)	ELECTRICAL	TOTAL SYSTEM AMPS	NEMA PLUG	AWEF	BTUH*	SHIP WT. (LB/KG)
CPB050PC-S-0	R290	5.25	115/60/1	6.9	5-15P	5.61	4100	192/87
CPB075PC-S-0		9.5**	115/60/1	11.4	5-20P	5.61	6700	214/97
CPB100PC-S-0		10.5***	115/60/1	15.3	5-20P	5.61	8800	257/117
CPF050PC-S-0		5.25	115/60/1	6.9	5-15P	1.96	1600	197/89
CPF075PC-S-0		9.5**	115/60/1	11.4	5-20P	2.07	2900	219/99
CPF100PC-S-0		10.5***	115/60/1	15.3	5-20P	2.14	3600	262/119
CPF150PC-S-4		10.5***	230/60/1	7.4	6-15P	2.21	4400	262/119
CPF175PC-S-4		10.5***	230/60/1	10.7	6-15P	2.38	6350	375/170

CAPSULE PAK ECO™ OUTDOOR REFRIGERATION SYSTEMS (CORD AND PLUG CONNECTED)

MODEL	REFRIGERANT	REFRIGERANT CHARGE (OZ)	ELECTRICAL	TOTAL SYS-TEM AMPS	NEMA PLUG	AWEF	BTUH*	SHIP WT. (LB/KG)
CPB050PC-E-0	R290	5.25	115/60/1	6.9	5-15P	7.6	4100	206/93
CPB075PC-E-0		9.5**	115/60/1	11.4	5-20P	7.6	6700	228/103
CPB100PC-E-0		10.5***	115/60/1	15.3	5-20P	7.6	8800	271/123
CPF050PC-E-0		5.25	115/60/1	6.9	5-15P	2.84	1600	211/95
CPF075PC-E-0		9.5**	115/60/1	11.4	5-20P	2.91	2900	233/105
CPF100PC-E-0		10.5***	115/60/1	15.3	5-20P	2.96	3600	276/125
CPF150PC-E-4		10.5***	230/60/1	7.4	6-15P	3.01	4400	276/125
CPF175PC-E-4		10.5***	230/60/1	10.7	6-15P	3.12	6300	390/177

*BTUH calculated using 90°F ambient.
**Two compressors using 4.75 oz each.
***Two compressors using 5.25 oz each.

Note:
- Consult factory for application specifics
- All Capsule Pak ECO systems require a single power supply.

9 ft. long power cord attached to condensing unit section

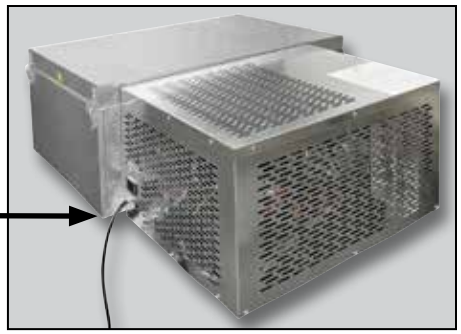

MASTER-BILT® Refrigeration Solutions 908 Hwy 15 South • New Albany, MS 38652
800-647-1284 • www.master-bilt.com

RSG Refrigerated Solutions Group®

002518 Rev. J All specifications within this publication subject to change without notice. ©2026 Master-Bilt Products, LLC. All rights reserved.