Scotsman®
Ice Systems

# Service Manual for
# Air, Water, and Remote Cooled Modular Cuber
# **Prodigy Elite®** Models MC0322, MC0522, MC0722, MC0330, MC0530, MC0630, MC0830, MC1030, MC1448, MC1848, MC2148

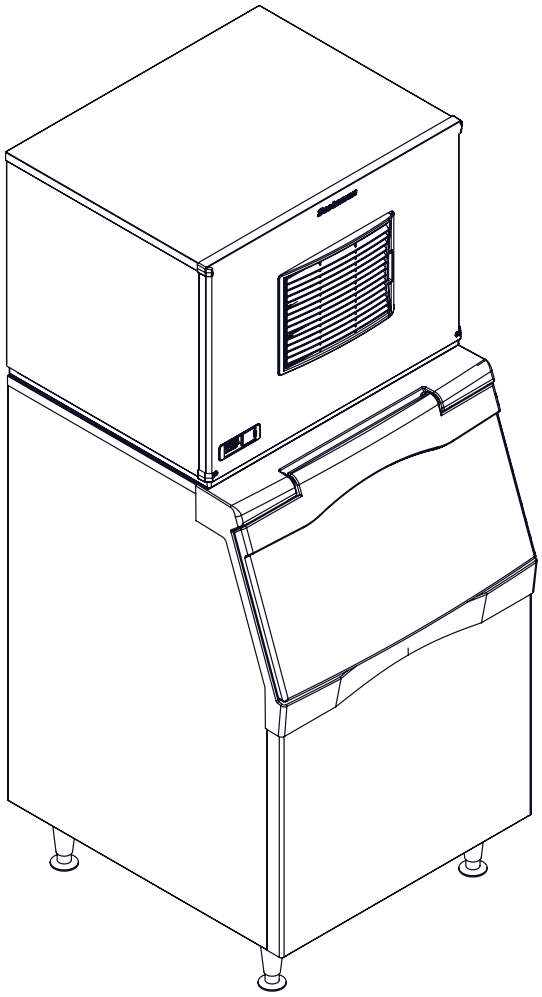

PRODIGY ELITE

## Introduction

This technical manual covers the Prodigy line, excluding the Eclipse remote low side models. All are shipped with an Installation and User's manual, which can be referred to separately. General installation information is included in this manual.

Contents

Model Number Description . . . . . Page 3
Water . . . . . Page 4
General Installation - Air or Water Cooled . . . . . Page 5
General Installation - Air or Water Cooled . . . . . Page 6
Adjustments . . . . . Page 7
Water purge setting . . . . . Page 8
General Installation - Remote . . . . . Page 9
General Installation - Remote . . . . . Page 10
General Installation - Remote . . . . . Page 11
General Installation - Remote . . . . . Page 12
General Installation - Remote . . . . . Page 13
Prodigy Cuber System Information . . . . . Page 14
Controller Information . . . . . Page 15
Component Indicator Lights . . . . . Page 16
How It Works - Air Cooled . . . . . Page 17
How It Works - Water Cooled . . . . . Page 18
How It Works - Remote . . . . . Page 19
Electrical Sequence - Air or Water Cooled . . . . Page 20
Electrical Sequence - Remote Cooled . . . . . Page 21
Remote Schematics . . . . . Page 22
Electrical Component Details . . . . . Page 23
Electrical Component Details . . . . . Page 25
Refrigeration . . . . . Page 26
Water System . . . . . Page 27
Control Operation . . . . . Page 28
Control Safeties . . . . . Page 29
Control Button Use (from standby) . . . . . Page 30
Control Button Use - continued . . . . . Page 31
Thermistor Values . . . . . Page 32
Cleaning . . . . . Page 33
Critical Maintenance - Water Level Sensor . . . . Page 34
Critical Maintenance - Ice Thickness Sensor . . Page 35
Critical Maintenance - Spillway . . . . . Page 36
Diagnostics – Air Cooled . . . . . Page 37
Diagnostics - Air Cooled . . . . . Page 38
Low Ice Making Capacity - Air Cooled . . . . . Page 39
Diagnostics – Water Cooled . . . . . Page 40
Diagnostics - Water Cooled . . . . . Page 41
Low Ice Making Capacity - Water Cooled . . . . . Page 42
Diagnostics – Remote Air Cooled . . . . . Page 43
Diagnostics - Remote Air Cooled . . . . . Page 44
Low Ice Making Capacity - Remote Air Cooled . Page 45
Test Procedures - Sensors . . . . . Page 46
Ice Thickness Sensor . . . . . Page 47
Water Level Sensor . . . . . Page 48
Temperature Sensors . . . . . Page 49
Test Procedures - Compressor . . . . . Page 50
Test Procedures - Fan motor . . . . . Page 51
Test Procedures - Water Pump . . . . . Page 52
Test Procedure - Purge valve . . . . . Page 53
Test Procedure - Compressor contactor . . . . . Page 54
Test Procedures - Pressure switches . . . . . Page 55
Test Procedures - Liquid Line Solenoid . . . . . Page 56
Test Procedure - Inlet Water Solenoid Valve . . . Page 57
Test Procedure - Harvest Assist . . . . . Page 58
Repair Section . . . . . Page 59
Repair Section . . . . . Page 60
Repair Section . . . . . Page 61
Repair Section . . . . . Page 62
Repair Section . . . . . Page 63
Repair Section . . . . . Page 64
Repair Section . . . . . Page 65
Repair Section . . . . . Page 66
Refrigeration Removal and Replacement . . . . . Page 67
Refrigeration Removal and Replacement . . . . . Page 68
Refrigeration Removal and Replacement . . . . . Page 69
Optional add-on control information - KVS . . . . Page 70
Performance Data . . . . . Page 71
Performance Data . . . . . Page 72
Performance Data . . . . . Page 73
Performance Data . . . . . Page 74
Performance Data . . . . . Page 75
Performance Data . . . . . Page 76
Performance Data . . . . . Page 77
Wiring Diagrams . . . . . Page 78
Wiring Diagrams . . . . . Page 79

Wiring Diagrams . . . . . Page 80
Wiring Diagrams . . . . . Page 81
Wiring Diagrams . . . . . Page 82
Wiring Diagrams . . . . . Page 83
Wiring Diagrams . . . . . Page 84
Wiring Diagrams . . . . . Page 85
Wiring Diagrams . . . . . Page 86
Wiring Diagrams . . . . . Page 87
Wiring Diagrams . . . . . Page 88
Wiring Diagrams . . . . . Page 89
Wiring Diagrams . . . . . Page 90
Wiring Diagrams . . . . . Page 91
Wiring Diagrams . . . . . Page 92
Wiring Diagrams . . . . . Page 93
Wiring Diagrams . . . . . Page 94
Wiring Diagrams . . . . . Page 95
Wiring Diagrams . . . . . Page 96
Wiring Diagrams . . . . . Page 97
Wiring Diagrams . . . . . Page 98
Wiring Diagrams . . . . . Page 99
Wiring Diagrams . . . . . Page 100
Wiring Diagrams . . . . . Page 101
Wiring Diagrams . . . . . Page 102
Wiring Diagrams . . . . . Page 103
Wiring Diagrams . . . . . Page 104
Wiring Diagrams . . . . . Page 105
Wiring Diagrams . . . . . Page 106
Wiring Diagrams . . . . . Page 107
Wiring Diagrams . . . . . Page 108
Wiring Diagrams . . . . . Page 109

## Model Number Description

Example:

- MC0322SA-1A
- MC= modular cuber
- 03= nominal ice capacity in 100s of pounds
- 22= nominal width of cabinet
- S= Cube size. S=small or half dice cube. M=medium or full dice cube
- A=Condenser type. A=air cooled. W=water cooled
- -1=115 60 Hz, -32=208-230 60 Hz, -3= 208-230 3 phase 60 Hz
- A=Series revision code.

**Note: In some areas of this manual model numbers may include only the first five characters of the model number, meaning that the cube size, condenser type and voltage differences are not critical to the information listed there.**

Scotsman reserves the right to make design changes and/or improvements at any time. Specifications and design are subject to change without notice.

## Water

The quality of the water supplied to the ice machine will have an impact on the time between cleanings and ultimately on the life of the product. There are two ways water can contain impurities: in suspension or in solution. Suspended solids can be filtered out. In solution or dissolved solids cannot be filtered, they must be diluted or treated. Water filters are recommended to remove suspended solids. Some filters have treatment in them for suspended solids. Check with a water treatment service for a recommendation.

RO water. This machine can be supplied with Reverse Osmosis water, but the water conductivity must be no less than 10 microSiemens/cm.

### Potential for Airborne Contamination

Installing an ice machine near a source of yeast or similar material can result in the need for more frequent sanitation cleanings due to the tendency of these materials to contaminate the machine. Most water filters remove chlorine from the water supply to the machine which contributes to this situation. Testing has shown that using a filter that does not remove chlorine, such as the Scotsman Aqua Patrol, will greatly improve this situation, while the ice making process itself will remove the chlorine from the ice, resulting in no taste or odor impact.

Additionally, devices intended to enhance ice machine sanitation, such as the Scotsman Aqua Bullet, can be placed in the machine to keep it cleaner between manual cleanings.

### Water Purge

Cube ice machines use more water than what ends up in the bin as ice. While most water is used during ice making, a portion is designed to be drained out every cycle to reduce the amount of hard water scale in the machine. That’s known as water purge, and an effective purge can increase the time between needed water system cleaning.

In addition, this product has the capability to automatically vary the amount of water purged based on the purity of the water supplied to it. The water purge rate can also be set manually. Adjustments of purge due to local water conditions are not covered by warranty.

### Location Limitations:

The product is designed to be installed indoors, in a controlled environment. Air cooled models discharge very warm air into the room out the back. Space must be allowed at the left side and back for air intake and discharge. Water cooled models discharge warm water into the building's drain. Space needs to be provided on both sides and above for service access.

### Space Limitations

**Note: Although the machine will function, ice capacity of air cooled machines will be significantly reduced with minimal clearance at the sides, back and top. Some space is recommended for service and maintenance purposes on all models.**

6" of space at the sides and back is required for adequate operation. To get the most capacity, locate the machine away from heat producing appliances and heating ducts.

22 and 30 inch: Airflow is in the front, out the back

48 inch wide models: Air flow is in the front and left side and out the back.

### Environmental Limitations

| | Minimum | Maximum |
|---|---|---|
| Air temperature | 50°F. | 100°F. |
| Water temperature | 40°F. | 100°F. |
| Water pressure | 20 psi | 80 psi |

Power supply – acceptable voltage ranges

| | Minimum | Maximum |
|---|---|---|
| 115 volt model | 104 volts | 126 volts |
| 208-230 volt model | 198 volts | 253 volts |

Warranty Information

The warranty statement for this product is provided separately from this manual. Refer to it for applicable coverage. In general warranty covers defects in material or workmanship. It does not cover maintenance, corrections to installations, or situations when the machine is operated in circumstances that exceed the limitations printed above

### Plumbing Requirements

All models require connection to cold, potable water. A hand actuated valve within site of the machine is required. Air cooled models have a single 3/8” FPT inlet water connection.

Water cooled models have the same inlet fitting plus an additional 3/8” FPT condenser inlet water connection.

### Water Filters

If connecting to water filtration, filter only the water to the reservoir, not to the condenser. Install a new cartridge if the filters were used with a prior machine.

All models require drain tubing to be attached to them. Air cooled models have a single ¾” FPT drain fitting in the back of the cabinet. Water cooled models have the same fitting plus an additional ½” FPT drain fitting in the back of the cabinet.

Install new tubing when replacing a prior ice machine, as the tubing will have been sized for the old model and might not be correct for this one.

**Note: This NSF listed model has a 1" anti-back flow air gap between the water inlet tube end and the highest possible reservoir water level, no back flow device is required for the potable water inlet.**

### Drain Tubing:

Use rigid drain tubes and route them separately – do not Tee into the bin’s drain and, if water cooled, do not Tee the condenser drain into the reservoir or bin drain.

Vent the reservoir drain. A vertical vent at the back of the drain, extended about 8 – 10” will allow the gravity drain to empty and also keep any surges during draining from discharging water out the vent..

Horizontal runs of drain tubing need a ¼” fall per foot of run for proper draining. Follow all applicable codes.

### Electrical

See the spec sheet or User’s Manual for Minimum Circuit Ampacity or Maximum Fuse Size ratings.

The machine is not supplied with a power cord, one must either be field installed or the machine hard-wired.

The dataplate on the back of the cabinet details the power requirements, including voltage, phase, minimum circuit ampacity and maximum fuse size. HACR type circuit breakers may be used in place of fuses. Extension cords are not permitted. Use of a licensed electrician is recommended.

Electrical connections are made inside the junction box in the back panel of the ice machine.

Follow all applicable local, state and national codes.

### Ice Bridge Thickness

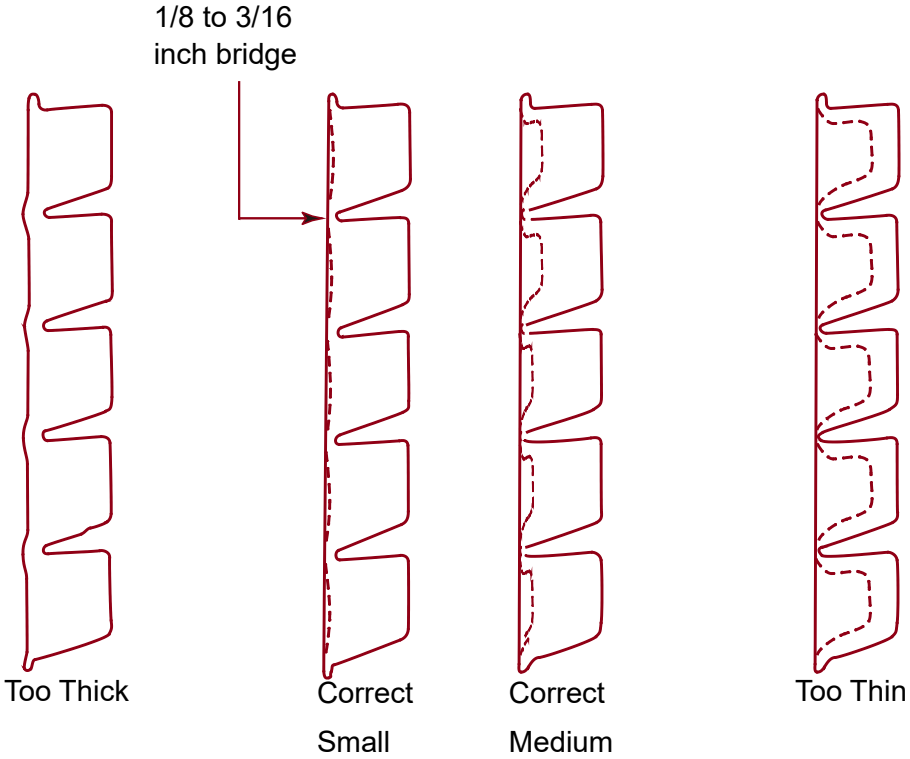


Caution: Do not make the bridge too thin or the machine will not harvest properly. Bridge thickness adjustments are not covered by warranty.

Shut machine off.

Access the ice thickness sensor.

Check gap between metal tip and evaporator grid. Standard gap is 7/32 inch. To set 7/32" drill bit between sensor tip and evaporator to check. Adjust gap using adjustment screw.

Restart unit and check ice bridge. Repeat as needed.

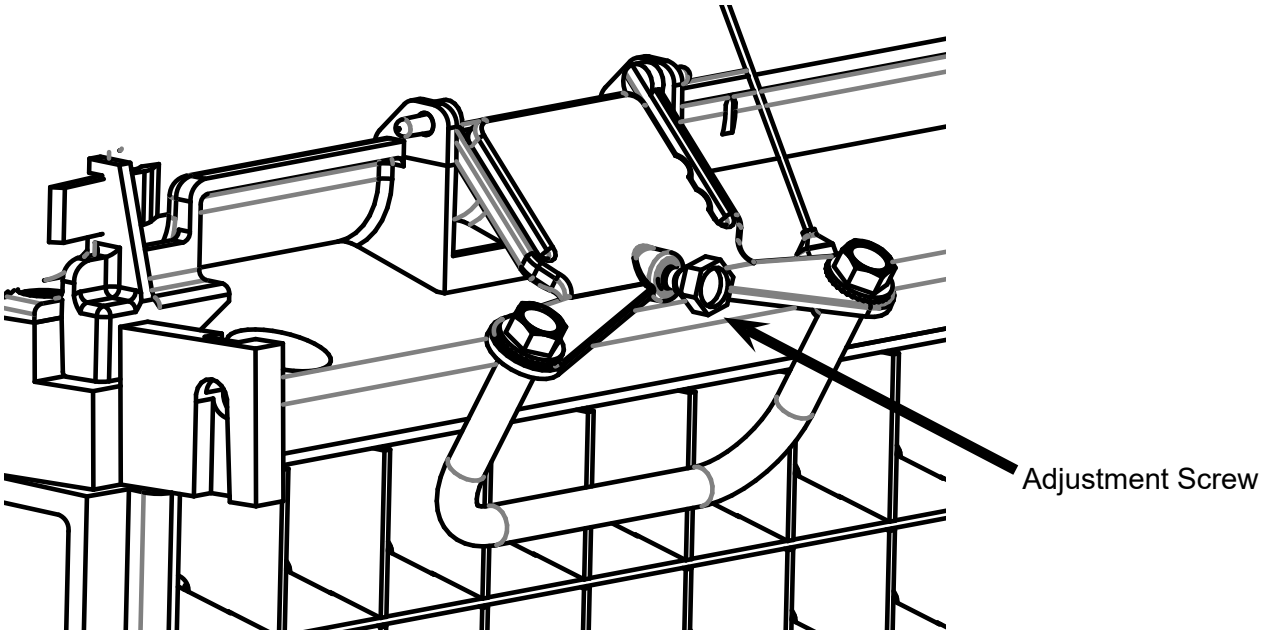

## Water purge setting

The water purge is factory set to the Automatic setting. The setting can be changed to one of 5 manual settings or placed on automatic. The purge setting shows in the Code Display.

| purge setting | 1 - Minimum | 2 - Moderate | 3 - Standard | 4 - Heavy | 5 - Maximum | A - Automatic |
|---|---|---|---|---|---|---|
| Water Type | RO water or equivalent, TDS less than 35 | Low TDS non - RO water | Setting for typical water | High TDS water | Very high TDS water, greater than 256 | Any with conductivity not less than 10 microSiemens/cm |

To set:

Switch the machine OFF by holding the Off button in until a number or the letter A shows on the display.

Press and release the On button repeatedly until the number on the display corresponds to the desired setting.

Press and release the Off switch again to return to the normal control state.

### Product Description and Electrical Requirements

See user's manual, dataplate, or spec sheet for Minimum Circuit Ampacity or Maximum Fuse Size

Ratings include the remote condenser motor, as it is designed to be powered by the ice machine. If connecting remote condenser independently of the ice machine, use the information on the condenser's dataplate for fuse and wire sizes.

### Location Limitations

This ice system is made up of three parts, the ice making machine, or head; the remote condenser; and the interconnecting tubing. The ice making machine must be installed indoors, in a controlled environment. Space must be provided near the machine for service access. The remote condenser may be installed above or below the ice machine, per the limits stated later in this manual. The remote condenser may be installed outdoors within the temperature limits listed below. The interconnecting tubing must be installed per the directions stated in this manual, and the amount of tubing exposed to uncontrolled temperatures must be minimized.

### Space Limitations

Although the machine will function with no clearance to the top and sides, some space must be allowed for service access. Building the machine in with no access will cause higher service cost, in many cases this extra cost may not be covered by warranty.

Environmental Limitations, ice machine:

| | Minimum | Maximum |
|---|---|---|
| Air temperature | 50°F. | 100°F. |
| Water temperature | 40°F. | 100°F. |
| Water Pressure | 20 psi | 80 psi |

Environmental Limitations, remote condenser

| | Minimum | Maximum |
|---|---|---|
| Air temperature | -20°F. | 120°F. |

Power Supply

| | Minimum | Maximum |
|---|---|---|
| 115 volt model | 104 volts | 126 volts |
| 208-230 volt model | 198 volts | 253 volts |

Central Condenser Coils

The ice machine may be connected to a central condenser coil. The requirements are:

• Coil – not previously used with mineral oil system. Virgin coil preferred.

• Correct size (internal volume) and capacity (BTUH).

• Includes a headmaster valve for discharge pressure control. Headmaster kit available for certain MAC condensers, kit number is RCKCME6GX-E.

• Fan motor on all the time or controlled to be on whenever the ice machine is operating.

• Non-Scotsman condensers must have prior Scotsman Engineering approval for warranty coverage to be in effect.

Precharged tubing kits:

The ice making head's and the remote condenser's refrigeration circuits must be connected. They are designed to be connected using precharged refrigerant tubing, supplied in kits of liquid and discharge tubes. Several lengths are available, order the one that just exceeds the length needed for the site.

| 10" | 25' | 40' | 75' |
|---|---|---|---|
| BRTE10 | BRTE25 | BRTE40 | BRTE75 |

No additional refrigerant is required. Note: Refrigerant charge is supplied with the ice machine

### Remote Condenser Location

Use the following for planning the placement of the condenser relative to the ice machine - see illustration on the following page.

Location Limits - condenser location must not exceed ANY of the following limits:

- Maximum rise from the ice machine to the condenser is 35 physical feet
- Maximum drop from the ice machine to the condenser is 15 physical feet
- Physical line set maximum length is 100 feet.
- Calculated line set length maximum is 150.

**Calculation Formula:**

- Drop = dd x 6.6 (dd = distance in feet)
- Rise = rd x 1.7 (rd = distance in feet)
- Horizontal Run = hd x 1 (hd = distance in feet)
- Calculation: Drop(s) + Rise(s) + Horizontal Run = dd+rd+hd = Calculated Line Length

Configurations that do NOT meet these requirements must receive prior written authorization from Scotsman.

Do NOT:

- Route a line set that rises, then falls, then rises.
- Route a line set that falls, then rises, then falls.

Calculation Example 1:

The condenser is to be located 5 feet below the ice machine and then 20 feet away horizontally.

5 feet x 6.6 = 33. 33 + 20 = 53. This location would be acceptable

Calculation Example 2:

The condenser is to be located 35 feet above and then 100 feet away horizontally. 35 x 1.7 = 59.5. 59.5 +100 = 159.5. 159.5 is greater than the 150 maximum and is NOT acceptable.

Operating a machine with an unacceptable configuration is misuse and will void the warranty.

For The Installer: Remote Condenser

Locate the condenser as near as possible to the interior location of the ice machine.

**Note: The location of the condenser is relative to the ice machine is LIMITED by the specification on the prior page.**

Meet all applicable building codes.

Roof Attachment

Install and attach the remote condenser to the roof of the building, using the methods and practices of construction that conform to the local building codes, including having a roofing contractor secure the condenser to the roof.

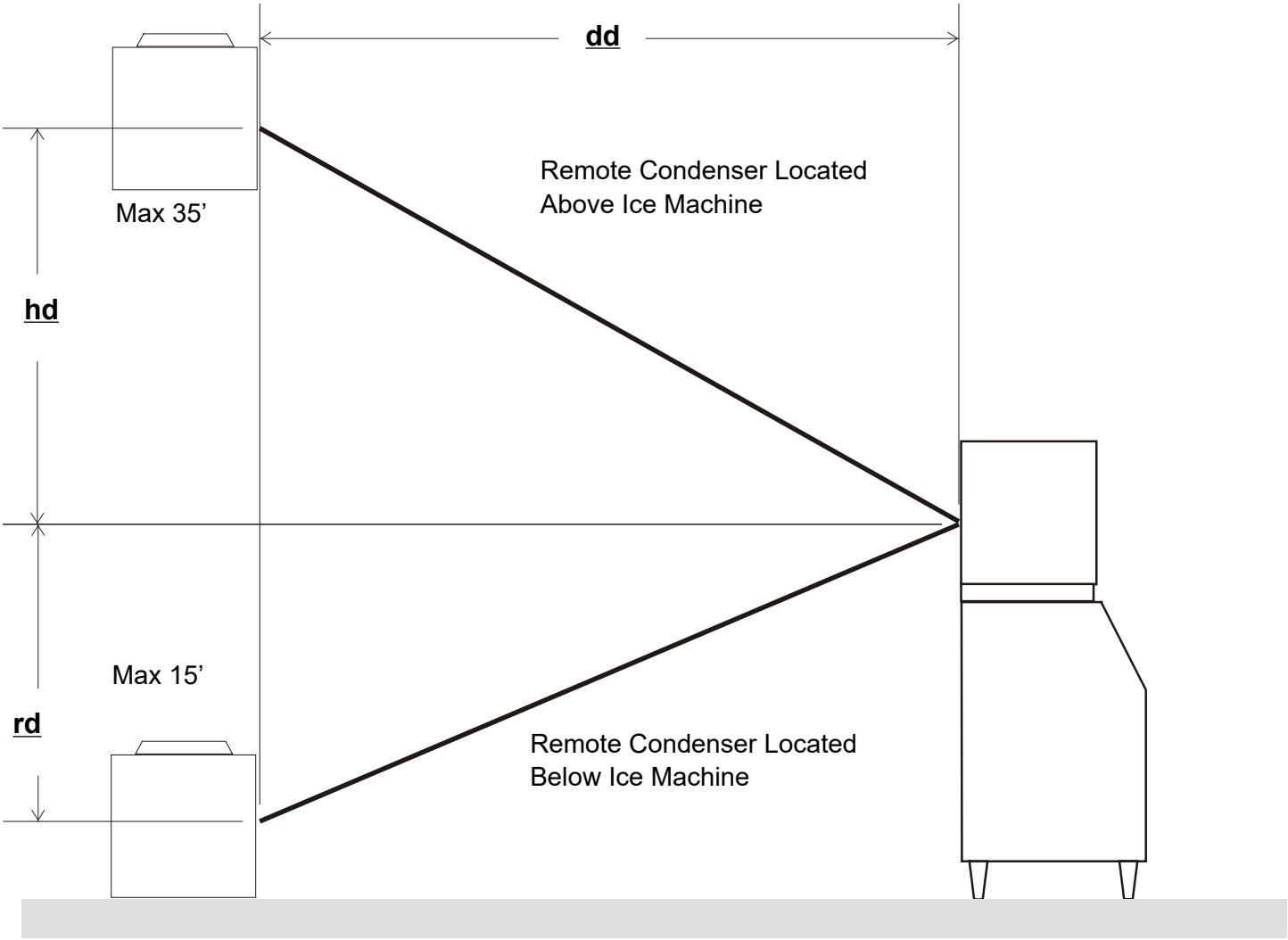


Condenser Distance and Location Schmatic

## General Installation - Remote

Do not connect the refrigerant tubing until all routing and forming of the tubing is complete. Final connections requires brazing, steps must be performed by an EPA certified type II or higher technician. The Lineset of tubing contains a 3/8” diameter liquid line, and a 1/2” diameter discharge line.

**Note: The openings in the building ceiling or wall, listed in the next step, are the minimum sizes recommended for passing the refrigerant lines through.**

2. Have the roofing contractor cut a minimum hole for the refrigerant lines of 1 3/4”. Check local codes, a separate hole may be required for the electrical power supply to the condenser.

Caution: Do NOT kink the refrigerant tubing while routing it.

**At Condenser:**

1. Remove protective plugs from both connections and vent the nitrogen from the condenser.
2. Remove the tubing access bracket to allow more room for brazing.
3. Route the lineset tubes to there connection.
4. Clean tubing ends and position into stubs.

**Note: Be sure tube and stubs are round, dress with swage tool if needed.**

**At Head:**

1. Remove the tubing access bracket to allow more room for brazing.
1. Confirm connection ball valves are fully closed.
2. Remove protective plugs from both connections.
3. Remove caps from access valve connections.
4. Remove cores from access valves.
5. Connect refrigeration hoses to access valves.
6. Connect dry nitrogen source to liquid line connection.
7. Shorten tubing to correct length, clean ends and insert them into valve stubs.

**Note: Be sure tube and stubs are round, dress with swage tool if needed.**

8. Add heat sink material to ball valve body.
9. Open nitrogen and flow 1 psi nitrogen into liquid line tube and braze the liquid line and suction line tubes to the valve stubs.
10. With nitrogen flowing braze the liquid and suction line connections.

**At Condenser:**

1. Braze the liquid and suction line connections.

**At Head:**

1. Remove nitrogen source.
2. Return valve cores to access valves.
3. Connect vacuum pump to **both** access valves and evacuate tubing and head to at least a 300 micron level.
4. Remove vacuum pump and add R-404A to both tubes to provide a positive pressure.
5. Leak check the all braze connections and repair any leaks.
6. Locate king valve off receiver, located near the back wall of most models. Fully open king valve.
7. Open both ball valves, making sure they’re fully open.

**Note: The full refrigerant charge is contained in the receiver of the ice machine.**

### Plumbing Requirements

All models require connection to cold, potable water. A hand actuated valve within site of the machine is required.

Water Filters

Install a new cartridge if the filters were used with a prior machine.

All models require drain tubing to be attached to them. There is a single ¾” FPT drain fitting in the back of the cabinet.

Install new tubing when replacing a prior ice machine, as the tubing will have been sized for the old model and might not be correct for this one.

Connect water supply to water inlet fitting.

---

**Note: This NSF listed model has a 1" anti-back flow air gap between the potable water inlet tube end and the highest possible reservoir water level, no back flow device is required.**

---

Connect drain tubing to drain fitting.

Route the drain tubing to building drain. Follow local codes for drain air gap.

Use rigid drain tubes and route them separately – do not Tee into the bin’s drain.

Vent the reservoir drain. A vertical vent at the back of the drain, extended about 8 – 10” will allow the gravity drain to empty and also keep any surges during draining from discharging water.

Horizontal runs of drain tubing need a ¼” per fall per foot of run for proper draining.

Follow all applicable codes.

### Electrical

The machine is not supplied with a power cord, one must either be field installed or the machine hard-wired.

The dataplate on the back of the cabinet details the power requirements, including voltage, phase, minimum circuit ampacity and maximum fuse size. HACR type circuit breakers may be used in place of fuses. Extension cords are not permitted. Use of a licensed electrician is recommended.

The ice maker is designed to operate on its own electrical circuit and must be individually fused. Voltage variation must not exceed the limits listed earlier.

The remote condenser is designed to be powered from the ice machine. A separate knockout hole has been provided in the ice maker electrical junction box.

Electrical connections are made inside the junction box in the back panel of the ice machine.

Remove the junction box cover and route the power cord through the access hole and properly attach the power supply wires to the leads in the junction box.

Attach the remote condenser fan motor wires to the wires in the junction box tagged “fan motor leads”.

Install field supplied strain reliefs per code. Attach a ground wire to the ground connection in the junction box.

Check voltage when complete.

Return the junction box cover to its original position and secure with the original screws.

Follow all applicable local, state and national codes.

**Overall System Type:**

• Refrigeration: Mechanical, either air cooled, water cooled or remote cooled.

• Water System: Inlet water solenoid valve fills reservoir once per cycle. Purge solenoid valve opens to discharge some reservoir water once per cycle.

• Control System: Electronic

• Harvest cycle sensor: Conductivity probe

• Water full/empty sensor: Conductivity probe

• Bin Control: Curtain Switch

• Ice type: Unified

• Harvest system: Hot gas defrost with mechanical assist

**Electrical Components:**

• Compressor

• Contactor

• Water Pump

• Inlet Water Solenoid Valve

• Purge or purge Valve

• Fan Motor(s)

• Fan motor pressure control

• High pressure cut out – certain AC models only

• Harvest Assist Solenoid(s)

• Hot Gas Valve(s)

• Controller

• Transformer – 12v AC for the controller only

• Water Level Sensor

• Ice Thickness Sensor

• Curtain Switch(es)

## Controller Information

Machine Indicator Lights

- Power
- Status
- Water
- Clean
- Bin Full (on lower light and switch panel)

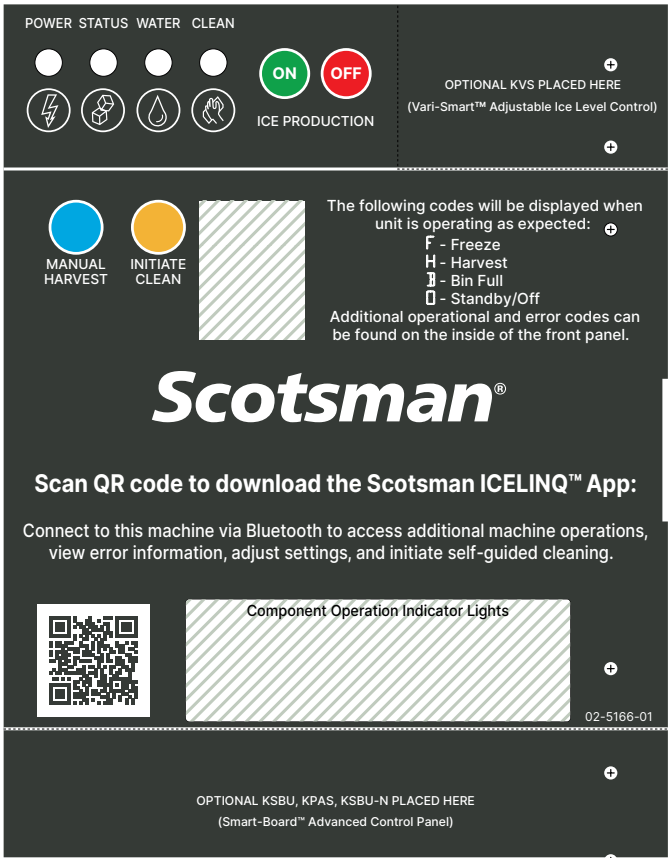


Code Display

Main codes - automatically displayed

F . . . . . Freeze Cycle

F flashes . . Freeze Cycle is Pending

H . . . . . Harvest Cycle

H flashes . . Manual Harvest

B . . . . . Bin is Full

C . . . . . Clean Cycle

P . . . . . Preservation Mode

T . . . . . Test Mode

O . . . . . Off

D . . . . . Drain Sump

E . . . . . Self Test Failed

1 flashes . . Max Freeze - Retrying

1 . . . . . Max Freeze Time Shut Down

2 flashes . . Max Harvest - Retrying

2 . . . . . Max Harvest Time Shut Down

3 . . . . . Slow Water Fill

4 . . . . . High Discharge Temp

5 . . . . . Sump Temp Sensor Failure

7 . . . . . Discharge Temp Sensor Failure

8 flashes . . Short Freeze - Retrying

8 . . . . . Short Freeze - Thin ice

Setting Codes - requires push button sequence

Water Purge Settings

A. 1. 2. 3. 4. 5

De-Scale notification

- see table to the right

Change De-Scale Notification Interval -

This feature is accessible only from standby (Status Light Off).

1. Press and hold harvest button for 3 seconds.

This starts the Time to Clean Adjustment Mode and displays the current time to clean setting.

2. Press the clean button repeatedly to cycle through the 4 settings:

1 year

0 or disabled

4 months

6 months (default)

3. Push Off to confirm the selection.

## Component Indicator Lights

- Condenser Fan / Aux (Aux = liquid line solenoid when a remote condenser model)
- Water Pump
- Purge Valve
- Water Solenoid
- Hot Gas
- Compressor
- Ready to Harvest
- Sump Empty
- Sump Full
- Curtain SW1
- Curtain SW2

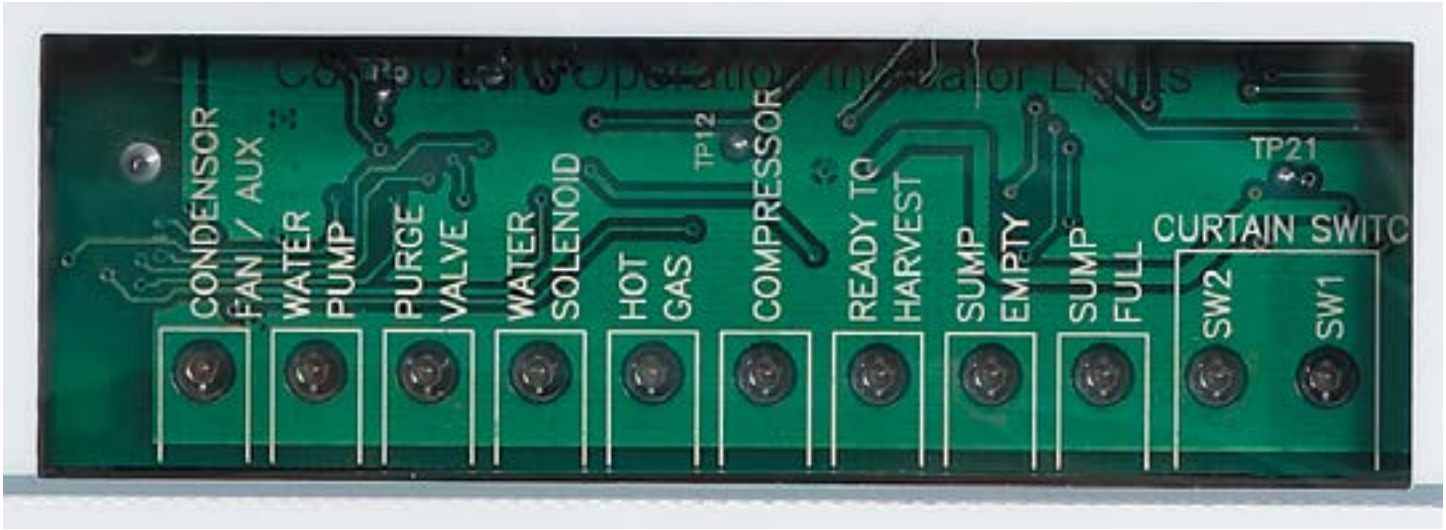

**Freeze Cycle.** At start up the controller drains and refills the reservoir. The reservoir refills when the mid length water level sensor probe is uncovered and continues to fill until the top probe is in contact with water. When the reservoir has filled, the compressor and water pump start. After the discharge pressure has increased past the cut in point of the fan pressure control, the fan motor(s) will begin to operate and warm air will be discharged out the back of the cabinet. The fan motor will switch on and off as the discharge pressure rises and falls.

Water flows over the evaporator as the refrigeration system begins to remove heat. When the water temperature falls to a preset point, as measured by the water temperature sensor, the controller shuts off the water pump for 30 seconds. The freeze cycle resumes when the pump restarts and ice begins to form on the evaporator. As it forms, the water flowing over the ice moves closer and closer to the metal tip of the ice thickness sensor. When it comes into contact with the sensor for a few continuous seconds, that signals the controller that the freeze cycle is complete.

The controller may shut the air cooled fan motor off for a variable period of time to build up heat for harvest. This is dependant upon the temperature of the discharge line sensor.

**Harvest Cycle**. When the harvest cycle begins, the controller shuts off the fan motor, switches on the hot gas valve, and through a parallel circuit, the harvest assist solenoid. After a few seconds the purge valve opens and water is drained from the reservoir. Based on either the automatic purge or manual purge setting, the pump and purge valve will be switched off at a time determined to have drained enough water for that setting. The inlet water valve will open to fill the reservoir anytime the mid length probe is uncovered, which occurs during the reservoir drain cycle. Harvest continues as the hot discharge gas flows into the evaporator serpentine, heating up the evaporator. At the same time the harvest assist solenoid is pushing against the back of the ice slab. When the ice releases from the evaporator, it harvests as a unit, and the harvest assist probe provides some additional force to push it off. When the ice falls off it will force the curtain(s) open. An open curtain during the harvest cycle signals the controller that the evaporator has released its ice. If this is a single evaporator machine the controller will terminate harvest. If it is a two evaporator machine, the controller will continue harvest until both curtains have opened. If one curtain remains open, the controller will shut the machine down on bin full. Anytime harvest is complete the hot gas valve and harvest assist are shut off. The harvest assist pin returns to its normal position by spring pressure.

If the curtain(s) re-close after harvest, the freeze cycle will restart.

**Freeze Cycle**. At start up the controller drains and refills the reservoir. The reservoir refills when the mid length water level sensor probe is uncovered and continues to fill until the top probe is in contact with water. When the reservoir has filled, the compressor and water pump start. After the discharge pressure has increased past the set point of the water regulating valve, the water regulating valve will open and warm water will be discharged out the condenser drain. The water regulating valve will modulate to maintain a relatively constant discharge pressure. Water flows over the evaporator as the refrigeration system begins to remove heat. When the water temperature falls to a preset point, as measured by the water temperature sensor, the controller shuts off the water pump for 30 seconds. The freeze cycle resumes when the pump restarts and ice begins to form on the evaporator. As it forms, the water flowing over the ice moves closer and closer to the metal tip of the ice thickness sensor. When it comes into contact with the sensor for a few continuous seconds, that signals the controller that the freeze cycle is complete.

**Harvest Cycle**. When the harvest cycle begins, the controller switches on the hot gas valve, and through a parallel circuit, the harvest assist solenoid. After a few seconds the purge valve opens and water is drained from the reservoir. Based on either the automatic purge or manual purge setting, the pump and purge valve will be switched off at a time determined to have drained enough water for that setting. The inlet water valve will open to fill the reservoir anytime the mid length probe is uncovered, which occurs during the reservoir drain cycle.

Harvest continues as the hot discharge gas flows into the evaporator serpentine, heating up the evaporator. At the same time the harvest assist solenoid is pushing against the back of the ice slab. When the ice releases from the evaporator, it harvests as a unit, and the harvest assist probe provides some additional force to push it off. When the ice falls off it will force the curtain(s) open. An open curtain during the harvest cycle signals the controller that the evaporator has released its ice. If this is a single evaporator machine the controller will terminate harvest. If it is a two evaporator machine, the controller will continue harvest until both curtains have opened. If a curtain remains open, the controller will shut the machine down on bin full. Anytime harvest is complete the hot gas valve and harvest assist are shut off. The harvest assist pin returns to its normal position by spring pressure.

If the curtain(s) re-close after harvest, the freeze cycle will restart.

**Freeze Cycle**. At start up the controller drains and refills the reservoir. The reservoir refills when the mid length water level sensor probe is uncovered and continues to fill until the top probe is in contact with water. When the reservoir has filled, the liquid line valve, compressor and water pump are switched on. After the discharge pressure has increased past the set point of the headmaster in the condenser, the headmaster will direct refrigerant gas into the condenser and warm air will be discharged out of the condenser. The headmaster will modulate to maintain a minimum discharge pressure. Water flows over the evaporator as the refrigeration system begins to remove heat. When the water temperature falls to a preset point, as measured by the water temperature sensor, the controller shuts off the water pump for 30 seconds. The freeze cycle resumes when the pump restarts and ice begins to form on the evaporator. As it forms, the water flowing over the ice moves closer and closer to the metal tip of the ice thickness sensor. When it comes into contact with the sensor for a few continuous seconds, that signals the controller that the freeze cycle is complete.

**Harvest Cycle**. When the harvest cycle begins, the controller switches on the hot gas valve, and through a parallel circuit, the harvest assist solenoid. After a few seconds the purge valve opens and water is drained from the reservoir. Based on either the automatic purge or manual purge setting, the pump and purge valve will be switched off at a time determined to have drained enough water for that setting. The inlet water valve will open to fill the reservoir anytime the mid length probe is uncovered, which occurs during the reservoir drain cycle.

Harvest continues as the hot discharge gas flows into the evaporator serpentine, heating up the evaporator. At the same time the harvest assist solenoid is pushing against the back of the ice slab. When the ice releases from the evaporator, it harvests as a unit, and the harvest assist probe provides some additional force to push it off. When the ice falls off it will force the curtain(s) open. An open curtain during the harvest cycle signals the controller that the evaporator has released its ice. If this is a single evaporator machine the controller will terminate harvest. If it is a two evaporator machine, the controller will continue harvest until both curtains have opened. If a curtain remains open, the controller will shut the machine down. Anytime harvest is complete the hot gas valve and harvest assist are shut off.

The harvest assist pin returns to its normal position by spring pressure.

If the curtain(s) re-close after harvest, the freeze cycle will restart.

Shut down occurs when a curtain remains open after a harvest cycle. The controller will switch off the liquid line solenoid valve and operate the compressor for 30 seconds, then shut it off.

## Electrical Sequence - Air or Water Cooled

Power connected, unit previously switched Off.

Control board does a self check. If the self check fails, the unit displays an E and no further action will occur.

If the self check passes, the controller will display a 0, the curtain light(s) will be ON and the Power and Sump Empty lights will be ON.

Pushing and releasing the On button will start the ice making process.

The display will begin to blink F. The component indicator lights will switch on and off to match the following process:

The purge valve opens and the water pump starts to empty the reservoir. This is done to discharge any excess water from ice melting into the reservoir.

The hot gas valve and the harvest assist solenoid are energized.

The inlet water valve will open to fill the reservoir. The water valve can open any time the water level is low.

After a few seconds the purge valve closes and the pump shuts off.

When the reservoir is full the inlet water valve stops and the compressor switches on. Five seconds after the compressor starts the hot gas valve and the harvest assist solenoid are de-energized.

Light Information: The display shows a non-blinking F. The Power and Status Lights will be Green. The compressor, fan motor, water pump, sump full and one or two curtain switch lights will be ON.

The air cooled model's fan motor will start to turn when the discharge pressure has built up to the fan pressure control's cut in point. This is about 15 seconds after the compressor starts.

The Freeze cycle continues. The compressor, water pump, fan motor and curtain indicator lights will be ON. When the reservoir water temperature falls to a certain preset point, the water pump will shut off for 30 seconds. This is the anti-slush period. At this time the controller checks the conductivity of the water in the reservoir for the auto-purge feature. After the water pump restarts the Sump Full light will go out and neither sump lights will be on for the rest of the freeze cycle.

When the ice has built up enough so that the water flowing over the evaporator comes into continuous contact with the ice level sensor, the Ready to Harvest light will begin to blink on and off. When it has been On continuously for 5 seconds, the controller will switch the machine into a Harvest cycle.

Indicator Information: The display shows a non-blinking H. The Power and Status Lights will be Green. The compressor, hot gas valve and one or two curtain switch lights will be ON. After a few seconds the water pump, purge valve and inlet water valve lights will come on.

The fan motor(s) shut off and remain off throughout the harvest cycle.

The harvest assist solenoid is connected in parallel with the hot gas valve. Although it is energized throughout the harvest cycle, its piston does not move until the ice has become partially loosened from the evaporator plate by the action of the hot refrigerant gas passing through the evaporator serpentine.

The water pump and purge valve will shut off when the purge level setting time has been reached, either the manual time or the automatic time. The inlet water valve will remain on until it fills the reservoir. The Ready to Harvest light will switch Off when the ice falls from the evaporator.

Harvest continues until the ice slab is ejected from the evaporator and falls, opening the curtain. When the curtain opens, the magnetic reed curtain switch opens, breaking the circuit to the controller. If the curtain re-closes within 30 seconds, the controller switches the machine back into another freeze cycle. If the curtain switch remains open, the controller shuts the machine down and puts it into a standby position.

## Electrical Sequence - Remote Cooled

Power connected, unit previously switched Off.

Control board does a self check. If the self check fails, the unit displays an E and no further action will occur.

If the self check passes, the controller will display a 0, the curtain light(s) will be ON and the Power and Sump Empty lights will be ON.

Pushing and releasing the On button will start the ice making process.

The display will begin to blink F. The component indicator lights will switch on and off to match the following process:

The purge valve opens and the water pump starts to empty the reservoir. This is done to discharge any excess water from ice melting into the reservoir.

The hot gas valve and the harvest assist solenoid are energized.

The inlet water valve will open to fill the reservoir. The water valve can open any time the water level is low.

After a few seconds the purge valve closes and the pump shuts off.

When the reservoir is full the inlet water valve stops, the liquid line valve is opened and the compressor switches on. Five seconds after the compressor starts the hot gas valve and the harvest assist solenoid are de-energized.

Light Information: The display shows a non-blinking F. The Power and Status Lights will be Green. The compressor, fan motor, water pump, sump full and one or two curtain switch lights will be ON.

The Freeze cycle continues. When the reservoir water temperature falls to a certain preset point, the water pump will shut off for 30 seconds. This is the anti-slush period. At this time the controller checks the conductivity of the water in the reservoir for the auto-purge feature. After the water pump restarts the Sump Full light will go out and neither sump lights will be on for the rest of the freeze cycle.

When the ice has built up enough so that the water flowing over the evaporator comes into continuous contact with the ice level sensor, the Ready to Harvest light will begin to blink on and off. When it has been On continuously for 3 seconds, the controller will switch the machine into a Harvest cycle. Indicator Information: The display shows a non-blinking H. The Power and Status Lights will be Green.

The compressor, hot gas valve and one or two curtain switch lights will be ON. After a few seconds the water pump, purge valve and inlet water valve lights will come on. The harvest assist solenoid is connected in parallel with the hot gas valve. Although it is energized throughout the harvest cycle, its piston does not move until the ice has become partially loosened from the evaporator plate by the action of the hot refrigerant gas passing through the evaporator serpentine.

The remote condenser fan motor is powered by the compressor contactor, so it will be operating during the harvest cycle.  Update: A fan relay as been added to some of the E series units.  The fan relay is located in the control box of ice making section and will drop the fan out during the harvest cycle. Refer to the wiring diagram on the ice maker.

The water pump and purge valve will shut off when the purge level setting time has been reached, either the manual time or the automatic time. The inlet water valve will remain on until it fills the reservoir. The Ready to Harvest light will switch Off when the ice falls from the evaporator.

Harvest continues until the ice slab is ejected from the evaporator and falls, opening the curtain. When the curtain opens, the magnetic reed curtain switch opens, breaking the circuit to the controller. If the curtain re-closes within 30 seconds, the controller switches the machine back into another freeze cycle. If the curtain switch remains open, the controller shuts the machine down and puts it into a standby position.

## Remote Schematics

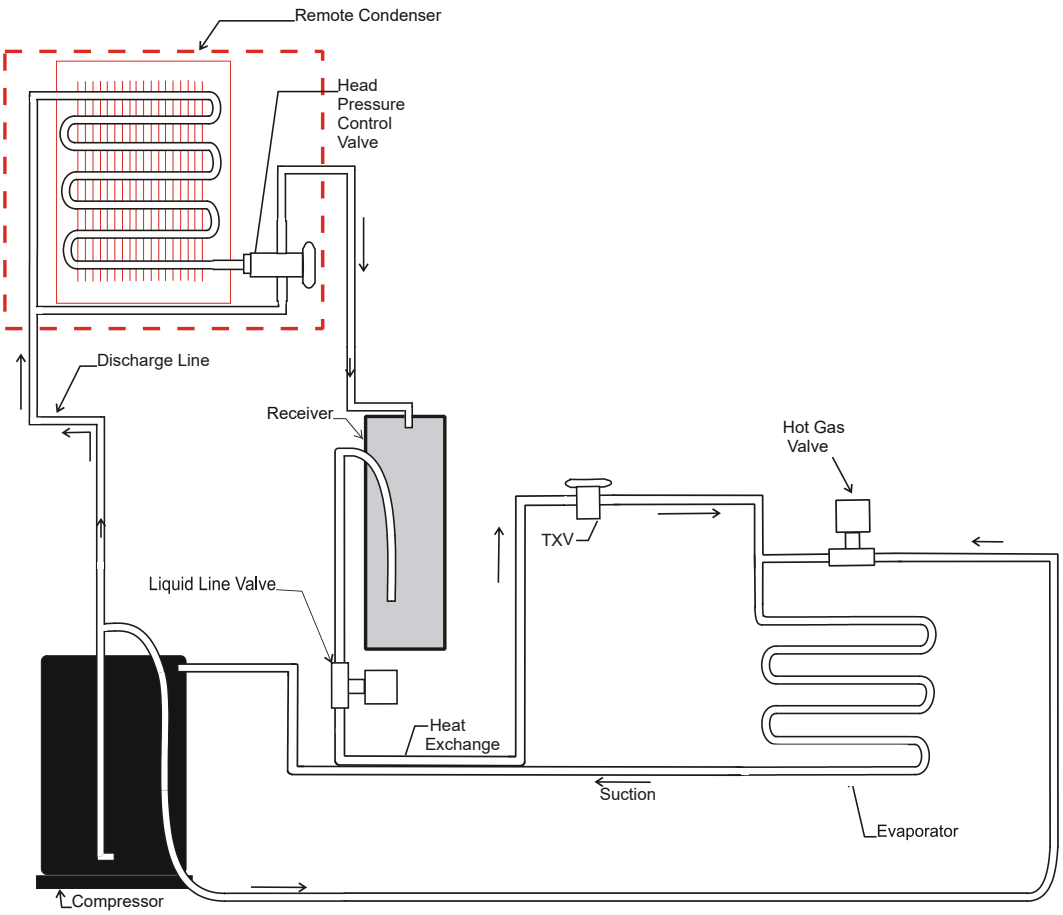


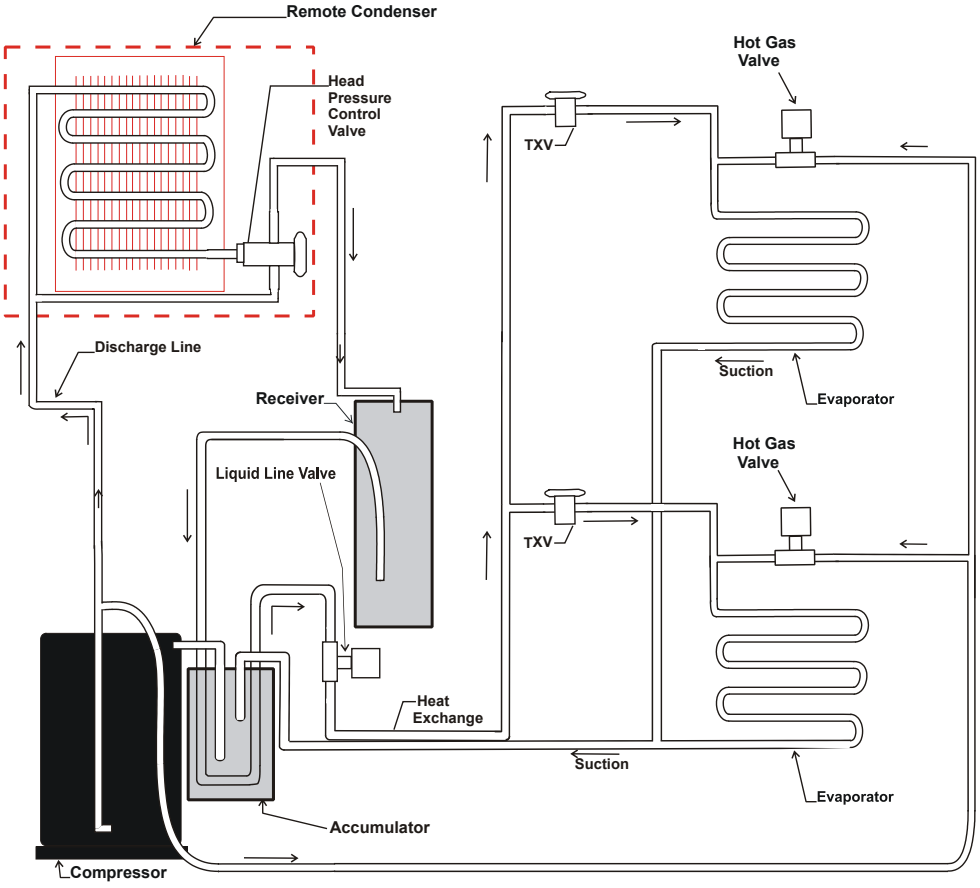

### Compressor

• Operated by the compressor contactor. Single phase self contained models have PTCR and run capacitor.

### Contactor

• Operated by the controller and the high pressure cut out switch. Line voltage coil. When energized the Compressor indicator light will be ON.

### Water Pump

• Operated by the controller. When energized, the Water Pump indicator light will be ON. Inlet Water Solenoid Valve

• Operated by the controller. Line voltage coil. When energized, the Water Solenoid indicator light will be ON.

### Purge Valve

• Operated by the controller. Line voltage coil. When energized, the Purge Valve indicator light will be ON. Energized for a time during harvest.

### Fan Motor(s)

• Operated by the controller and the fan pressure control. Can cycle on and off in the freeze cycle, always off during harvest. When the controller has energized it, the indicator light will be ON but the fan will not turn unless the discharge pressure is high enough to close the high pressure control.

• Fan(s) may shut off near the end of the freeze cycle to build up heat for harvest. Time of shut off depends upon available heat, as measured by the discharge temperature.

### High pressure cut out

• Some air cooled and all remote and all water cooled models have a high pressure cut out switch that shuts the power off to the compressor contactor if the discharge pressure is too high. It is an automatic reset.

### Harvest Assist Solenoid or Motor(s)

• Operated by the controller in parallel with the hot gas valve. Cycles on and off at the beginning of a restart. Energized throughout the harvest cycle. Line voltage coil.

### Liquid Line Valve

• Remote only. Opened by the controller to start a freeze cycle. Closed to shut unit off. Line voltage coil.

### Hot Gas Valve(s)

• Operated by the controller in parallel with the harvest assist solenoid. Cycles on and off at the beginning of a restart. Energized throughout the harvest cycle. Line voltage coil.

### Controller

• Senses ice thickness, water level, water temperature, discharge temperature. Controls compressor contactor, fan motor, water pump, inlet water valve, hot gas valve, purge valve, harvest assist solenoid. Indicates status and component operation. 12 volt.

### Transformer

• 12 volt secondary, supplies power to controller only.

### Water Level Sensor

• Three probe conductivity sensor. Bottom probe is common, mid probe is refill sump, top probe is full sump. Refill can occur at any time.

### Ice Thickness Sensor

• Single wire conductivity sensor. Circuit made from controller to ground to controller when water contacts a probe suspended over ice plate. Signals ready for harvest.

### Curtain Switch(es)

• Magnetic reed switch. Normally open, switch is closed when magnet is nearby. Models with two evaporators have two curtain switches. Single switch can be connected to either J8 or J7 of controller. Curtains may be removed in the freeze cycle without affecting controller operation. A curtain removed during harvest will cause the controller to terminate harvest and shut the unit off. Two curtain models require both curtains to open to terminate harvest, and if either one remains open for 30 seconds that signals the controller to shut the unit off on bin full.

### Water temperature sensor.

• Thermistor inserted into the water pump discharge hose. Reported temperature used by the controller to determine anti-slush cycle start time.

**Discharge temperature sensor.**

• Thermistor attached to the discharge line near the compressor. Reported temperature used by the controller to determine end-of-cycle-fan-off-delay time. If discharge temperature exceeds a preset maximum, controller will shut the machine off.

**Note: Controller will operate machine in a default mode with thermistors disconnected from the controller. Diagnostic code #5 or 7 will be displayed during that time.**

**Component Indicator Lights**

| System | Indicator Light ON |
|---|---|
| Condenser Fan or Liquid Line Valve | Fan Motor Powered or LLV open |
| Water Pump | Pump Motor Powered |
| Purge Valve | Purge Valve Opens |
| Inlet Water Solenoid Valve | Inlet Water Valve Opens |
| Hot Gas | Hot Gas Valve Opens |
| Compressor Contactor | Contactor Closes |
| Ready to Harvest | Water contacting ice thickness sensor probe |
| Sump Empty | Open between mid sensor and common |
| Sump Full | Closed between top probe and mid probe |
| Curtain Switch | Curtain open |

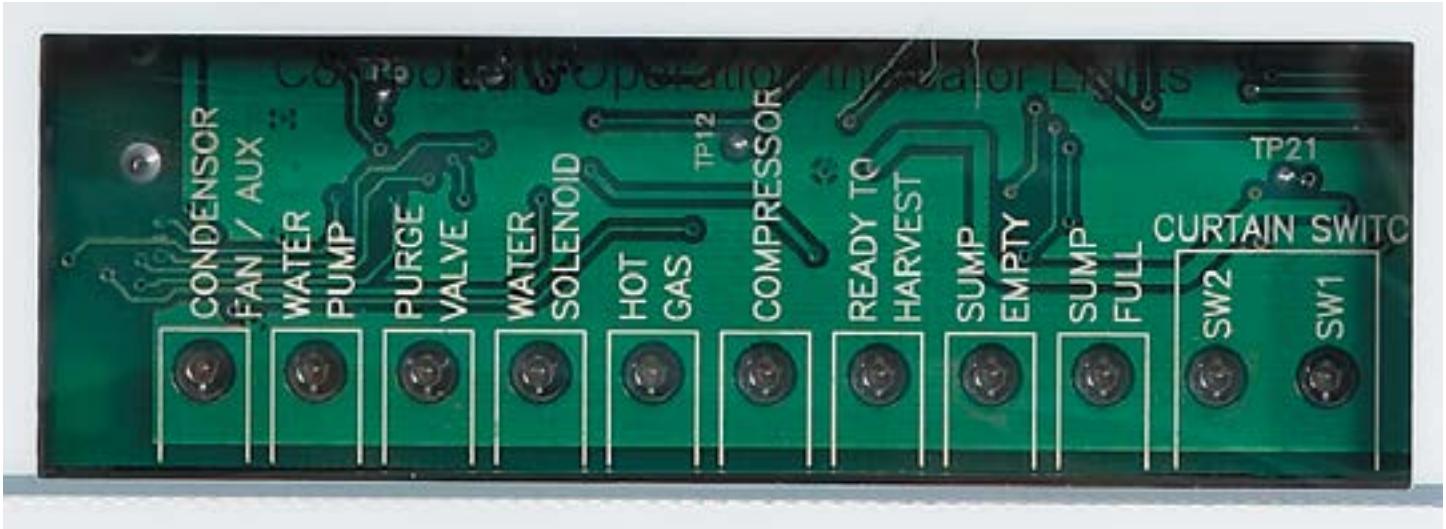

## Refrigeration

- Refrigerant: R-404A
- Compressors: Copeland or Tecumseh hermetic by model
- Expansion valves: Non adjustable, internally equalized, one per evaporator.
- Hot gas valves: Pilot operated, line voltage coils. One per plate.
- Condensers: Forced draft air, counterflow water. All air cooled models have left side air inlet.
- 48” wide air cooled models also have front air inlet. All air cooled models exhaust air out the back.
- Air filters: Surface mounted to panels. Filter media removable without removing panels.
- Fan blades: Reduced vibration blades in most air cooled models.
- Remote Systems: Head pressure control valves in condenser. No check valves. Headmaster protected by filters (not filter driers). Controller pumps unit down by closing the liquid line valve and keeping the compressor on for a fixed time period at shut down.
- Fan pressure control. All AC. Controls fan motor operation in the freeze cycle.
- High pressure cut out. WC, RC, AC with Tecumseh compressors.
- Evaporator: Unified cell plate. Nickel plated copper. Three heights: 6”, 12” and 18”. Small cube = half dice, medium cube = full dice.
- Small cube: 7/8" high x 7/8" deep x 3/8" high
- Medium cube: 7/8" high x 7/8" deep x 7/8" high

## Water System

- Batch type. Insulated water reservoir contains full water charge for each ice making cycle.
- Water valve: Solenoid type. Opens to fill reservoir when mid sensor probe no longer makes a circuit to the bottom probe. Closes when reservoir is full and top probe makes circuit to mid probe.
- Pump: Unsealed pedestal type, twist-release mounting
- Water purge valve: Solenoid type. Opens to purge water during harvest cycle.
- Water Level Sensor: Three probe conductivity.
- Distributor: ABS plastic. Evenly distributes water over the evaporator surface. Slides off the evaporator top. Removable cover for ease of cleaning.

**Standard control:**

- Electronic controller operating from a 12 AC volt power supply. Will operate within a voltage range between 10 and 15.5.
- User's Indicator lights, four front visible: Power, Status, Water, De-scale/Sanitize.
- Accessible On switch.
- Accessible Off switch.
- Code Display: Displays letters and numbers to indicate cycles and diagnostic codes.
- Manual Harvest switch: Use to trigger harvest at any time.
- Clean switch: Use to initiate and finish the de-scale or sanitizing cycles.
- Component Operation Indicator Lights: Indicate the status of certain components; water level; ready for harvest; curtain switch position.
- Power Light: On when power is being supplied to the controller.
- Status Light: Green when machine is in ice making mode and is operating correctly. Blinks red when a machine malfunction has been detected.
- Water Light: Blinks red when reservoir does not fill with allowed time period.
- De-scale / sanitize: Yellow when the controller has determined it is time to de-scale and sanitize the machine. Use clean process to reset light. Time is determined by power up time and controller's setting. Standard setting is 6 months. See adjustment process
- Bin Full Light: Green when the bin is full.

**Controller Connections:**

- J1 – Ground and Power Supply
- J2 – High voltage power harness to loads
- J3 – Lower membrane switch panel
- J4 – KVS ultrasonic bin level sensor board (if installed)
- J5 - Communications port
- J6 – Thermistor connection
- J7 – Curtain switch
- J8 – Curtain switch
- J9 – Water level sensor
- J10 – Ice thickness sensor
- J11 – Bin thermostat
- J12 – Factory Use
- J13 – KBILC basic ice level control (if installed)

### Max freeze time – 45 minutes

When exceeded, the controller will attempt another freeze cycle. If the next cycle's freeze time is less than maximum, the control will continue normal ice making. If the next freeze cycle was too long, the control will again attempt another freeze cycle. If the freeze cycle is too long three consecutive cycles, the controller will shut the unit off and it must be manually reset.

### Min freeze time – 6 minutes

If the controller switches the machine into harvest within 20 seconds of the minimum freeze time, the controller will harvest for a preset time and does not stop if the curtain switch opens.

If this occurs again in the next three cycles, the machine will shut down and must be manually reset.

### Max harvest time – 3.5 minutes

If the harvest cycle has continued for 3.5 minutes without the curtain opening, the controller will shut the machine off for 50 minutes and then restart. If there is another the machine will shut the machine off for another 50 minutes and then restart. If it fails a third consecutive time the controller will shut the machine down and must be manually reset.

• Time between resets – 50 minutes

• Number of automatic resets – 2

• Max water fill time – 5 minutes. Machine will attempt a restart every 20 minutes.

• Max discharge temp – 250 degrees F.

• Time interval between cleanings – 6 months power on time - adjustable in one month increments, can be set at 6, 5, 4 or 3 months of power up time.

• Manual harvest time – 3 minutes

• Pump down interval – remote only. 12 hours. Pump down is 30 seconds of compressor only on time.

• Minimum compressor off time – 4 minutes

• Continuous Run Time Maximum Cycles - 200

### Restarts

Power Interruption

The controller will automatically restart the ice machine after adequate voltage has been restored.

- H blinks on code display
- Status indicator light blinks
- Reservoir is drained and refilled
- Default harvest is initiated. The curtain switch does not have to open to terminate harvest, harvest will continue until the default harvest time expires. Default harvest time is 3 minutes. The machine will then return to a normal freeze cycle.

Water Interruption

- The controller will attempt to fill the reservoir every twenty minutes until it is successful.

## Control Button Use (from standby)

**Set purge level, 1-5 (1 is minimum, 5 is maximum) or Automatic:**

• Hold off button in for 3 seconds. Release.

• Press and release the On button to cycle through and select one of the five purge settings or to use the Automatic setting.

**Recall diagnostic code:**

• Hold off button in for 3 seconds. Release.

• Press and release the Harvest button to cycle through each of the last 10 error codes from most recent to oldest.

**Clear diagnostic code:**

• Hold Clean and Harvest buttons in for 3 seconds to clear all prior codes. If clean mode begins, push Off.

**Reset control:**

• Depress and release Off, then depress and release On

**Start Test Mode:**

• Hold Off button in for 3 seconds. Release.

• Hold Clean button in for 3 seconds. Release.

**Lock / Unlock control:**

**To lock ON**

• Hold ON button in for 5 seconds, keep holding then press and release Off twice.

**To lock OFF**

• Hold ON button and then press OFF button once within 3 seconds, wait 5 seconds then press Off twice and then release On.

**To unlock from Locked ON**

• Hold ON button in for 5 seconds, keep holding then press and release Off twice.

**To unlock from Locked OFF**

• Hold ON button and then press OFF button once within 3 seconds, wait 5 seconds then press Off twice and then release On.

**Empty reservoir:**

• Hold Clean button in for 3 seconds. Release. Pump and purge valve will be ON for 30 seconds. Repeat as needed.**Test Mode:**

• Depress Off for 3 seconds, release. Then depress Clean for 3 seconds.

• The sump will fill the first 30 seconds of the test. If the sump is full it will overflow into the bin. At 30 seconds the WIV will shut off and the WP will turn on. You will be able to see and hear the water running over the plates. After 10 seconds the PV and HGV will turn on. Water will be purging from the machine. After 10 more seconds the compressor will start. 5 seconds later the HGV will close. The compressor will run for a total of 20 seconds. After which everything will turn off for 5 seconds. After that time the HGV will open and you'll be able to hear the hissing as the pressure is equalized. 10 seconds later the fan will turn on (if air cooled and fan control jumped). After 10 seconds all will be off and the output test will be complete

**Change De-Scale Notification Interval**

Like the others, this feature is accessible only from standby (Status Light Off).

1. Press and hold harvest button for 3 seconds.

Starts the Time to Clean Adjustment State and displays the current time to clean setting.

2. Press the clean button repeatedly to cycle through the 4 possible settings:

Rev 5 and up (10/08 production start)

- 1 year (8760 hours)
- 0 (disabled)
- 4 months (2920 hrs)
- 6 months (4380 hours) (default)

3. Press Off or leave untouched for 60 seconds to select the displayed interval

Test Mode Sequence Table - Air or Water Cooled

| Time (seconds) | On | Off |
|---|---|---|
| 0 | WIV - 30 seconds | WP, HGV, Comp, Fan, PV |
| 30 | WP - 10 seconds | WIV, HGV, Comp, Fan, PV |
| 40 | WP, PV, HGV - 10 seconds | WIV, Comp, Fan |
| 50 | HGV, Comp - | 5 seconds WIV, WP, Fan, PV |
| 55 | Comp - 15 seconds | WIV, HGV, WP, Fan, PV |
| 70 | None - | 5 seconds All |
| 75 | HGV - 10 seconds | WIV, WP, Comp, Fan, PV |
| 85 | Fan - 10 seconds | WIV, HGV, WP, Comp, PV |
| 95 | None All – | Test Complete |

Test Mode - Remote

| Test Time (seconds) | On | Off |
|---|---|---|
| 0 | WIV - 30 seconds | WP, HGV, Comp, BV, PV |
| 30 | WP - 10 seconds | WIV, HGV, Comp, BV, PV |
| 40 | WP, PV, HGV - 10 seconds | WIV, Comp, BV |
| 50 | HGV, Comp - 5 seconds | WIV, WP, BV, PV |
| 55 | Comp - 15 seconds | WIV, HGV, BV, WP, PV |
| 70 | None - 5 seconds | All |
| 75 | HGV - 5 seconds | WIV, WP, Comp, BV, PV |
| 80 | BV - 5 seconds | WIV, HGV, WP, Comp, PV |
| 85 | None | All – Test Complete |

## Thermistor Values

| Deg. F | Ohms | Deg. F | Ohms | Deg. F | Ohms | Deg. F | Ohms | Deg. F | Ohms |
|---|---|---|---|---|---|---|---|---|---|
| 0 | 85325 | 51 | 19381 | 102 | 5569 | 153 | 1927 | 204 | 774 |
| 1 | 82661 | 52 | 18873 | 103 | 5446 | 154 | 1890 | 205 | 761 |
| 2 | 80090 | S3 | 18381 | 104 | 5325 | 155 | 1855 | 206 | 749 |
| 3 | 77607 | 54 | 17903 | 105 | 5208 | 156 | 1819 | 207 | 737 |
| 4 | 75210 | 55 | 17439 | 106 | 5093 | 157 | 1785 | 208 | 724 |
| 5 | 72896 | 56 | 16988 | 107 | 4981 | 158 | 1752 | 209 | 713 |
| 6 | 70660 | 57 | 16551 | 108 | 4872 | 159 | 1719 | 210 | 701 |
| 7 | 68501 | 58 | 16126 | 109 | 4766 | 160 | 1687 | 211 | 690 |
| 8 | 66415 | 59 | 15714 | 110 | 4663 | 161 | 1655 | 212 | 679 |
| 9 | 64400 | 60 | 15313 | 111 | 4562 | 162 | 1624 | 213 | 668 |
| 10 | 62453 | 61 | 14924 | 112 | 4463 | 163 | 1594 | 214 | 657 |
| 11 | 60571 | 62 | 14546 | 113 | 4367 | 164 | 1565 | 215 | 646 |
| 12 | 58752 | 63 | 14179 | 114 | 4273 | 165 | 1536 | 216 | 636 |
| 13 | 56995 | 64 | 13823 | 115 | 4182 | 166 | 1508 | 217 | 626 |
| 14 | 55296 | 65 | 13476 | 116 | 4093 | 167 | 1480 | 218 | 616 |
| 15 | 53653 | 66 | 13139 | 117 | 4006 | 168 | 1453 | 219 | 606 |
| 16 | 52065 | 67 | 12812 | 118 | 3921 | 169 | 1427 | 220 | 597 |
| 17 | 50529 | 68 | 12494 | 119 | 3838 | 170 | 1401 | 221 | 587 |
| 18 | 49043 | 69 | 12185 | 120 | 3757 | 171 | 1375 | 222 | 578 |
| 19 | 47607 | 70 | 11884 | 121 | 3678 | 172 | 1350 | 223 | 569 |
| 20 | 46217 | 71 | 11592 | 122 | 3601 | 173 | 1326 | 224 | 560 |
| 21 | 44872 | 72 | 11308 | 123 | 3526 | 174 | 1302 | 225 | 551 |
| 22 | 43571 | 73 | 11031 | 124 | 3452 | 175 | 1279 | 226 | 543 |
| 23 | 42313 | 74 | 10763 | 125 | 3381 | 176 | 1256 | 227 | 534 |
| 24 | 41094 | 75 | 10502 | 126 | 3311 | 177 | 1234 | 228 | 526 |
| 25 | 39915 | 76 | 10247 | 127 | 3243 | 178 | 1212 | 229 | 518 |
| 26 | 38774 | 77 | 10000 | 128 | 3176 | 179 | 1190 | 230 | 510 |
| 27 | 37669 | 78 | 9760 | 129 | 3111 | 180 | 1169 | 231 | 502 |
| 28 | 36600 | 79 | 9526 | 130 | 3047 | 181 | 1149 | 232 | 495 |
| 29 | 35564 | 80 | 9299 | 131 | 2985 | 182 | 1129 | 233 | 487 |
| 30 | 34561 | 81 | 9077 | 132 | 2924 | 183 | 1109 | 234 | 480 |
| 31 | 33590 | 82 | 8862 | 133 | 2865 | 184 | 1090 | 235 | 472 |
| 32 | 32649 | 83 | 8652 | 134 | 2807 | 185 | 1071 | 236 | 465 |
| 33 | 31738 | 84 | 8448 | 135 | 2751 | 186 | 1052 | 237 | 458 |
| 34 | 30855 | 85 | 8250 | 136 | 2696 | 187 | 1034 | 238 | 451 |
| 35 | 30000 | 86 | 8056 | 137 | 2642 | 188 | 1016 | 239 | 444 |
| 36 | 29171 | 87 | 7868 | 138 | 2589 | 189 | 998 | 240 | 438 |
| 37 | 28368 | 88 | 7685 | 139 | 2537 | 190 | 981 | 241 | 431 |
| 38 | 27589 | 89 | 7507 | 140 | 2487 | 191 | 965 | 242 | 425 |
| 39 | 26835 | 90 | 7333 | 141 | 2438 | 192 | 948 | 243 | 419 |
| 40 | 26104 | 91 | 7164 | 142 | 2390 | 193 | 932 | 244 | 412 |
| 41 | 25395 | 92 | 6999 | 143 | 2343 | 194 | 916 | 245 | 406 |
| 42 | 24707 | 93 | 6839 | 144 | 2297 | 195 | 901 | 246 | 400 |
| 43 | 24041 | 94 | 6683 | 145 | 2252 | 196 | 885 | 247 | 394 |
| 44 | 23394 | 95 | 6530 | 146 | 2208 | 197 | 871 | 246 | 389 |
| 45 | 22767 | 96 | 6382 | 147 | 2165 | 198 | 856 | 249 | 383 |
| 46 | 22159 | 97 | 6238 | 148 | 2123 | 199 | 842 | 250 | 377 |
| 47 | 21569 | 98 | 6097 | 149 | 2082 | 200 | 828 | | |
| 48 | 20997 | 99 | 5960 | 150 | 2042 | 201 | 814 | | |
| 49 | 20442 | 100 | 5826 | 151 | 2003 | 202 | 800 | | |
| 50 | 19903 | 101 | 5696 | 152 | 1965 | 203 | 787 | | |

## Cleaning

All models have an indicator light that switches on to inform the user that the cleaning interval has been reached. It does not stop the machine from making ice.

All models have a **single step, automatic** clean mode.

A single push of the Clean button puts the machine into a Manual Harvest to release any ice and warm up the system, then it drains the reservoir and refills it. The cleaning process is designed to use straight nickel safe ice machine scale remover, added between draining and refilling. The controller will indicate the proper time to add the scale remover by blinking A D I.

The rest is automatic, the controller will circulate and then flush out the scale remover. No manual timing is needed.

After the scale remover has been drained out, the water distributor must be inspected for loose scale and cleaned of any. Removal of the sump cover, pump bracket and curtain is next to be sure those parts have been cleaned.

For step by step instructions on how to perform a full maintenance cleaning, see User Manual or download the Scotsman ICELINQ® app, available on both the Apple App Store and Google Play Store.

Push button to initiate clean cycle.

Time-to-clean Indicator Light (amber when lit)

## Critical Maintenance - Water Level Sensor

During use the Water Level Sensor may become coated with mineral scale from the water, which if left untreated can negatively impact machine performance.

To correct, the Water Level Sensor must have the mineral scale removed. Follow the below steps every time the machine is cleaned.

**Note: Do not disassemble or submerge sensor while cleaning.**

2. Press tabs to release sensor and remove.

1. Disconnect harness from sensor

3. Wipe down probes with diluted scale remover to remove all traces of mineral build up. Rinse sensor probes with clean water (**do not submerge**) and then dry probes thoroughly.

4. Reinstall sensor into housing and reconnect harness.

## Critical Maintenance - Ice Thickness Sensor

The freeze cycle is controlled by an ice thickness sensor positioned in front of the ice making surface. It is triggered by water contact. Water contacts the sensor when the ice is at the proper size.

During use the Ice Thickness Sensor will become coated with mineral scale from the water, which if left untreated can cause changes in bridge thickness.

To correct, the Ice Thickness Sensor must have the mineral scale removed. Follow the below steps every time the machine is cleaned.

**Note: Do not disassemble or submerge sensor while cleaning.**

1. Disconnect harness from sensor

2. Press tabs to release sensor and remove.

3. Wipe down the metal part of the sensor with diluted ice machine scale remover to remove all traces of mineral build up. Rinse sensor with clean water (**do not submerge**) and then dry thoroughly.

4. Reinstall sensor into housing and reconnect harness.

## Critical Maintenance - Spillway

The freeze cycle on a Prodigy cuber is controlled by an ice thickness sensor positioned in front of the ice making surface. It is triggered by water contact. Normally water only contacts the sensor when the ice is at the proper size. However, irregular water flow can cause premature contact resulting in a short freeze cycle, small bridge, long harvest and even a shut down on short freeze (code 8).

The primary procedure for correcting poor water flow is to scrub the spillway surface.

1. Shut machine off.
2. Remove right side panel liner and panel.
3. Disconnect ice thickness sensor from its bracket and move out of the way.
4. Scrub 4 to 6 strokes across the normal flow of water. A clean nylon scrubbing pad is the recommended tool.
5. Reassemble all components and retest operation.

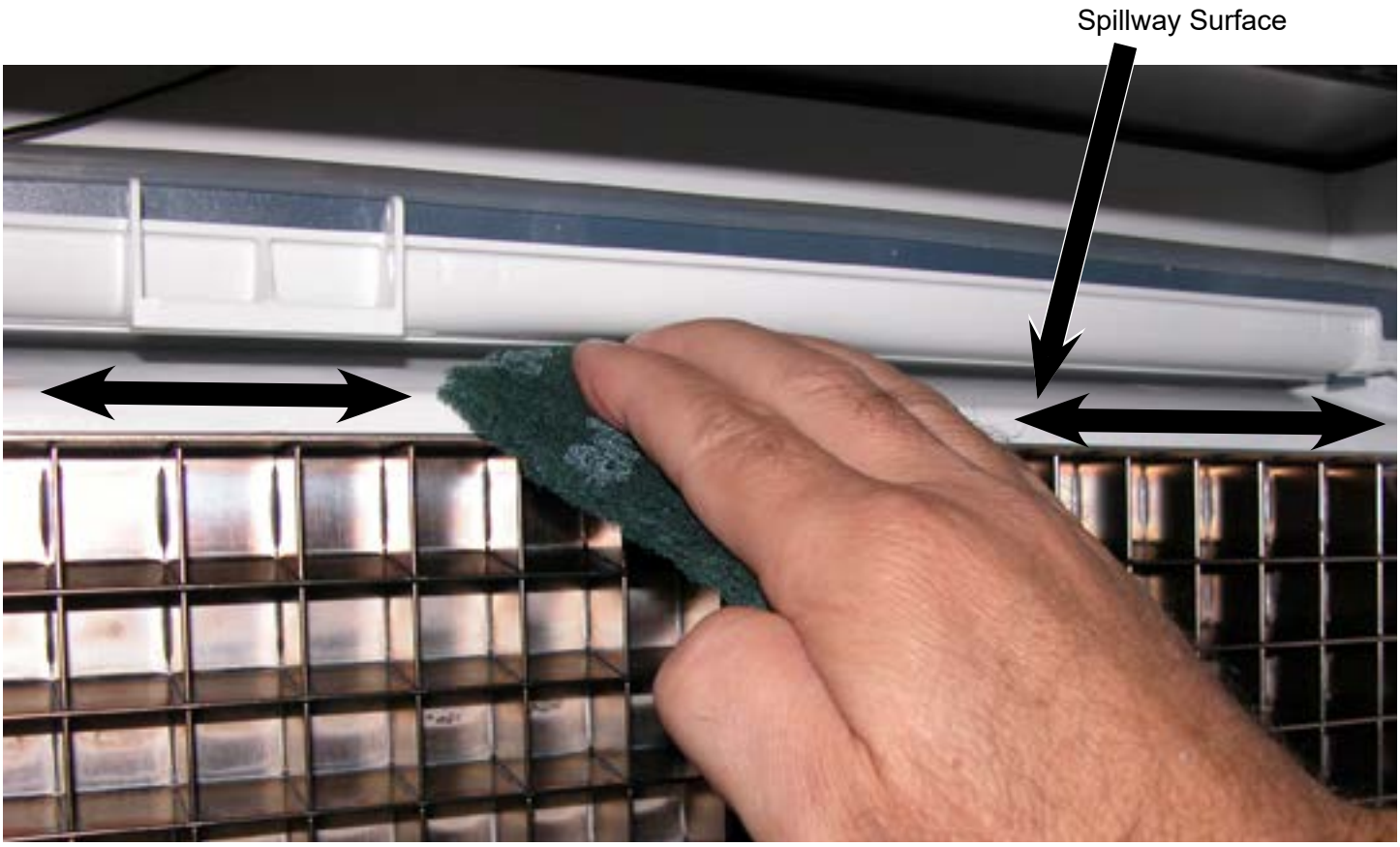


Other short freeze causes include:

- Mis-adjustment of ice thickness sensor.
- Broken, bent, or dismounted ice thickness sensor.
- Sagging water distributor mounting bracket. See Service Bulletin PS-9-2012.

## No ice

| Problem | Likely Cause | Probable Solution |
|---|---|---|
| No power to unit | Power disconnected Check breaker or fuse. Reset or replace, restart and check | |
| No power to controller | Transformer open | Replace transformer |
| Shut down on maximum water fill time | Water shut off | Restore water supply |
| Shut down on maximum freeze time | Water leak | Check purge valve, curtain, sump, pump hose |
| | Air filters clogged | Clean air filters |
| | Dirty condenser | Clean condenser |
| | Restricted location, intake air too hot | Have machine moved |
| | Ice thickness sensor dirty or disconnected | Check ice thickness sensor probe |
| | Water distributor dirty | Remove and clean water distributor |
| | Inlet water valve leaks through during freeze | Check inlet water valve |
| | Connected to hot water | Check for bleed thru from / missing check valve in building water supply |
| | Incomplete harvest | Check harvest system |
| | High pressure cut out opened | Check fan motor pressure control, check fan motor, check controller using test mode |
| | Fan motor pressure control open | Check fan pressure control |
| | Fan motor not turning | Check fan motor, check fan blade, check controller using test mode |
| | Water pump not pumping | Check pump motor, check controller using test mode |
| | Pump hose disconnected | Check hose |
| | Compressor not operating | Check compressor contactor, check controller using test mode |
| | | Check compressor start components, check PTCR resistance and temperature |
| | | Check compressor voltage |
| | | Check compressor windings |
| | Low refrigerant charge | Add some refrigerant and restart unit. If cycle time improves, look for leak. |
| | Hot gas valve leaks through during freeze | Check hot gas valve for hot outlet during freeze |
| | Thermostatic expansion valve bulb loose | Check bulb |
| | Thermostatic expansion valve producing very low or very high superheat | Check evaporator superheat, change TXV if incorrect |
| | Compressor inefficient | Check compressor amp draw, if low and all else is correct, change compressor |

| Problem | Likely Cause | Probable Solution |
|---|---|---|
| Shut down on maximum harvest time | Ice bridge thickness too small, not enough ice to open curtain | Check and adjust if needed |
| | Ice bridge thickness too large, ice frozen to evaporator frame | Check and adjust if needed |
| | Purge valve does not open, water melts ice bridge, not enough ice to open curtain | Check purge valve |
| | Incomplete ice formation | Check water distributor for partially plugged holes |
| | Curtain out of position | Check curtain for swing restriction |
| | Curtain switch does not open when curtain does | Check switch with ohmmeter |
| | Machine in very cold ambient | Move machine to a warmer location |
| | Hot gas valve does not open | Check hot gas valve, check controller using test mode |
| | Harvest assist probe out of position – ejector pin not retracted | Check harvest assist mechanism – spring should retract pin |
| | Damaged evaporator | Check evaporator surface |
| | Fan motor stays on during harvest | Check controller using test mode |
| Shut down on minimum freeze time | Grounded ice thickness sensor | Check sensor for dirt and position. Clean and check gap to evaporator surface |
| | Restricted water distributor | Clean water distributor |
| | Dirty spillway surface | Scrub spillway |
| | Bridge thickness too thin | Adjust to correct thickness |

## Low Ice Making Capacity - Air Cooled

| Problem | Likely Cause | Probable Solution |
|---|---|---|
| Long freeze cycle | Dirty air filters | Clean filters |
| | Dirty condenser | Clean condenser |
| | Hot ambient | Reduce room air temperature |
| | Water leak | Check purge valve, check curtain |
| | Water inlet valve leaks through | Check inlet valve |
| | Low on refrigerant | Add refrigerant, if cycle time drops, check for leak |
| | Incorrect superheat | Check evaporator superheat, if significantly low or high, replace TXV |
| | Fan(s) cycle on and off | Check pressures fans cycle at. Replace fan pressure switch if too low |
| Long Harvest Cycle | Dirty evaporator | De-scale water system |
| | No harvest assist | Check harvest assist solenoid |
| | Bridge thickness too big | Check and adjust bridge thickness |
| | Machine in very cool ambient | Increase room temperature |
| False bin full signal | Ice jammed in between curtain and sump | Clear ice away |
| | Curtain does not close correctly | Check curtain for proper swing |

### Makes Excessive Noise - Air cooled

| Problem | Likely Cause | Probable Solution |
|---|---|---|
| Fan blade vibrates | Blade is bent | Replace fan blade |
| | Fan motor mount is broken | Replace motor mount |
| Compressor vibrates | Mounting bolts loose | Tighten bolts |
| Water pump vibrates | Pump bearings worn | Replace pump |
| Panels vibrate | Mounting screws loose | Tighten screws |

### No ice

| Problem | Likely Cause | Probable Solution |
|---|---|---|
| No power to unit | Power disconnected Check breaker or fuse. Reset or replace, restart and check | |
| No power to controller | Transformer open | Replace transformer |
| Shut down on maximum water fill time | Water shut off | Restore water supply |
| Shut down on maximum freeze time | Water leak | Check purge valve, curtain, sump, pump hose |
| | Ice thickness sensor dirty or disconnected | Check ice thickness sensor probe |
| | Water distributor dirty | Remove and clean water distributor |
| | Inlet water valve leaks through during freeze | Check inlet water valve |
| | Connected to hot water | Check for bleed thru from / missing check valve in building water supply |
| | Incomplete harvest | Check harvest system |
| | High pressure cut out opened | Water supply cut off, restore water supply to condenser |
| | Fan motor pressure control open | Check fan pressure control |
| | Fan motor not turning | Check fan motor, check fan blade, check controller using test mode |
| | Water pump not pumping | Check pump motor, check controller using test mode |
| | Pump hose disconnected | Check hose |
| | Compressor not operating | Check compressor contactor, check controller using test mode |
| | | Check compressor start components, check PTCR resistance and temperature |
| | | Check compressor voltage |
| | | Check compressor windings |
| | Low refrigerant charge | Add some refrigerant and restart unit. If cycle time improves, look for leak. |
| | Hot gas valve leaks through during freeze | Check hot gas valve for hot outlet during freeze |
| | Thermostatic expansion valve bulb loose | Check bulb |
| | Thermostatic expansion valve producing very low or very high superheat | Check evaporator superheat, change TXV if incorrect |
| | Compressor inefficient | Check compressor amp draw, if low and all else is correct, change compressor |

| Problem | Likely Cause | Probable Solution |
|---|---|---|
| Shut down on maximum harvest time | Ice bridge thickness too small, not enough ice to open curtain | Check and adjust if needed |
| | Ice bridge thickness too large, ice frozen to evaporator frame | Check and adjust if needed |
| | Purge valve does not open, water melts ice bridge, not enough ice to open curtain | Check purge valve |
| | Incomplete ice formation | Check water distributor for partially plugged holes |
| | Curtain out of position | Check curtain for swing restriction |
| | Curtain switch does not open when curtain does | Check switch with ohmmeter |
| | Machine in very cold ambient | Move machine to a warmer location |
| | Hot gas valve does not open | Check hot gas valve, check controller using test mode |
| | Harvest assist probe out of position – ejector pin not retracted | Check harvest assist mechanism – spring should retract pin |
| | Damaged evaporator | Check evaporator surface |
| Shut down on minimum freeze time | Grounded ice thickness sensor | Check sensor for dirt and position. Clean and check gap to evaporator surface |
| | Restricted water distributor | Clean water distributor |
| | Dirty spillway surface | Scrub spillway |
| | Bridge thickness too thin | Adjust to correct thickness |

## Low Ice Making Capacity - Water Cooled

| Problem | Likely Cause | Probable Solution |
|---|---|---|
| Long freeze cycle | Dirty air filters | Clean filters |
| | Dirty condenser | Clean condenser |
| | Hot ambient | Reduce room air temperature |
| | Water leak | Check purge valve, check curtain |
| | Water inlet valve leaks through | Check inlet valve |
| | Low on refrigerant | Add refrigerant, if cycle time drops, check for leak |
| | Incorrect superheat | Check evaporator superheat, if significantly low or high, replace TXV |
| | Fan(s) cycle on and off | Check pressures fans cycle at. Replace fan pressure switch if too low |
| Long Harvest Cycle | Dirty evaporator | De-scale water system |
| | No harvest assist | Check harvest assist solenoid |
| | Bridge thickness too big | Check and adjust bridge thickness |
| | Machine in very cool ambient | Increase room temperature |
| False bin full signal | Ice jammed in between curtain and sump | Clear ice away |
| | Curtain does not close correctly | Check curtain for proper swing |

### Makes Excessive Noise - Water cooled

| Problem | Likely Cause | Probable Solution |
|---|---|---|
| Compressor vibrates | Mounting bolts loose | Tighten bolts |
| Water pump vibrates | Pump bearings worn | Replace pump |
| Panels vibrate | Mounting screws loose | Tighten screws |

## No ice

| Problem | Likely Cause | Probable Solution |
|---|---|---|
| No power to unit | Power disconnected Check breaker or fuse. Reset or replace, restart and check | |
| No power to controller | Transformer open | Replace transformer |
| Shut down on maximum water fill time | Water shut off | Restore water supply |
| Shut down on maximum freeze time | Water leak | Check purge valve, curtain, sump, pump hose |
| | Dirty condenser | Clean condenser |
| | Restricted location, intake air too hot | Have condenser moved |
| | Ice thickness sensor dirty or disconnected | Check ice thickness sensor probe |
| | Water distributor dirty | Remove and clean water distributor |
| | Inlet water valve leaks through during freeze | Check inlet water valve |
| | Connected to hot water | Check for bleed thru from / missing check valve in building water supply |
| | Incomplete harvest | Check harvest system |
| | High pressure cut out opened | Check fan motor pressure control, check fan motor, check controller using test mode |
| | Fan motor not turning | Check fan motor, check fan blade |
| | Water pump not pumping | Check pump motor, check controller using test mode |
| | Pump hose disconnected | Check hose |
| | Compressor not operating | Check compressor contactor, check controller using test mode |
| | | Check compressor start components, check PTCR resistance and temperature |
| | | Check compressor voltage |
| | | Check compressor windings |
| | Low refrigerant charge | Add some refrigerant and restart unit. If cycle time improves, look for leak. |
| | Hot gas valve leaks through during freeze | Check hot gas valve for hot outlet during freeze |
| | Thermostatic expansion valve bulb loose | Check bulb |
| | Thermostatic expansion valve producing very low or very high superheat | Check evaporator superheat, change TXV if incorrect |
| | Liquid line valve does not open | Check coil of valve, check controller using test mode |
| | Compressor inefficient | Check compressor amp draw, if low and all else is correct, change compressor |
| | Debris in refrigeration system | Recover charge. Open quick connects, check for loose or missing foil. Open liquid line and hot gas valves. Check for debris. Replace drier, evacuate and weigh in nameplate charge. |

| Problem | Likely Cause | Probable Solution |
|---|---|---|
| Shut down on maximum harvest time | Ice bridge thickness too small, not enough ice to open curtain | Check and adjust if needed |
| | Ice bridge thickness too large, ice frozen to evaporator frame | Check and adjust if needed |
| | Purge valve does not open, water melts ice bridge, not enough ice to open curtain | Check purge valve |
| | Incomplete ice formation | Check water distributor for partially plugged holes |
| | Curtain out of position | Check curtain for swing restriction |
| | Curtain switch does not open when curtain does | Check switch with ohmmeter |
| | Hot gas valve does not open | Check hot gas valve, check controller using test mode |
| | Harvest assist probe out of position – ejector pin not retracted | Check harvest assist mechanism – spring should retract pin |
| | Damaged evaporator | Check evaporator surface |
| Shut down on minimum freeze time | Grounded ice thickness sensor | Check sensor for dirt and position. Clean and check gap to evaporator surface |
| | Restricted water distributor | Clean water distributor |
| | Dirty spillway surface | Scrub spillway |
| | Bridge thickness too thin | Adjust to correct thickness |

## Low Ice Making Capacity - Remote Air Cooled

| Problem | Likely Cause | Probable Solution |
|---|---|---|
| | Dirty condenser | Clean condenser |
| | Hot ambient | Check condenser inlet temp |
| | Water leak | Check purge valve, check curtain |
| | Water inlet valve leaks through | Check inlet valve |
| | Low on refrigerant | Add refrigerant, if cycle time drops, check for leak |
| | Incorrect superheat | Check evaporator superheat, if significantly low or high, replace TXV |
| Long Harvest Cycle | Dirty evaporator | De-scale water system |
| | No harvest assist | Check harvest assist solenoid |
| | Bridge thickness too big | Check and adjust bridge thickness |
| | Machine in very cool ambient | Increase room temperature |
| False bin full signal | Ice jammed in between curtain and sump | Clear ice away |
| | Curtain does not close correctly | Check curtain for proper swing |

### Makes Excessive Noise - Air cooled

| Problem | Likely Cause | Probable Solution |
|---|---|---|
| Fan blade vibrates | Blade is bent | Replace fan blade |
| | Fan motor mount is broken | Replace motor mount |
| Compressor vibrates | Mounting bolts loose | Tighten bolts |
| Water pump vibrates | Pump bearings worn | Replace pump |
| Panels vibrate | Mounting screws loose | Tighten screws |

## Test Procedures - Sensors

All electrical components in this ice machine can be diagnosed with a volt-ohmmeter.

**Curtain Switch:**

1. Test using the controller's indicator lights. Observe SW1 and SW2. Open and close the curtain in question. When the curtain is opened, the SW light will be ON. When the curtain gets to within a half inch of closing (at the switch) the SW light will go OUT.

2. Test with an ohmmeter. Disconnect electrical power. Open the control box cover. Unplug the curtain switch lead from the controller. Connect an ohmmeter to the leads of the switch. Open and close the curtain. When the curtain is closed, the switch is closed and there will be continuity (5 ohms or less). When the curtain is open, the switch is open and the circuit will be open.

3. Test the controller's curtain switch circuit by jumping the connectors on J7 or J8 together. Reconnect electrical power. When jumped, the matching SW light will go out. When unplugged or open, the SW light will be ON.  J8 is for the SW1 light.

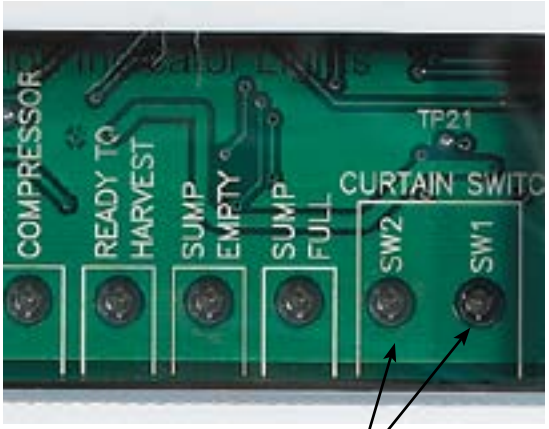


Curtain Switch Indicator Lights

Light is ON when curtain is OPEN

Single curtain models have one indicator light ON all the time.

## Ice Thickness Sensor

1. Test using the controller's indicator light. Observe the Ready To Harvest light. Shut the machine off. Use a wire to connect the metal part of the Ice Thickness sensor to the evaporator or simply remove the Ice Thickness Sensor and touch its metal surface to the metal control box wall. The Ready for Harvest light should go ON.

2. Test with an Ohmmeter. Disconnect electrical power. Open the control box cover. Unplug the ice thickness sensor lead from the controller. Connect an ohmmeter lead to the ice thickness sensor lead, touch the other ohmmeter lead to the ice machine chassis. There must be an open circuit. If there is continuity, the sensor must be replaced. If there is no continuity, touch the ohmmeter lead to the metal part of the ice thickness sensor. There should be continuity. If open, check the ice thickness sensor for scale build up. Clean and recheck. If still open, replace the ice thickness sensor.

3. Test the controller's ice thickness sensor circuit by connecting a wire from J10 to ground. Reconnect electrical power. The Ready for Harvest light should go ON.

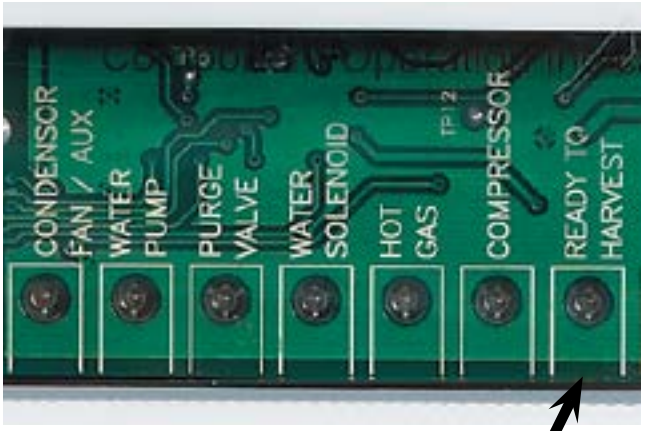


Ready To Harvest light is ON when water contacts ice thickness sensor.

Ice Thickness Sensor

## Water Level Sensor

1. Test using the controller's indicator lights (sump empty and sump full). Unit must be powered up and there must be water in the sump. Add some manually if needed. Locate water level sensor. Release from sump cover and slowly lift up until the mid-length probe is out of the water. The sump empty light should come on, and if the unit is on the inlet water solenoid valve will open to fill the reservoir. Return the water level sensor to its normal position. If the unit is on and calling for ice the water will fill until the top probe is in contact with it, at that time the sump full light will switch ON.

2. Test with an ohmmeter. Disconnect electrical power. Open the control box cover. Unplug the connector at J9. Locate water level sensor and remove it from the sump cover. Test 1: Place one lead of the ohmmeter on the longest probe and the other on the controller end of the red wire, there should be continuity. Test 2: Place one lead on the controller end of the white wire and the other on the mid-length probe, there should be continuity. Test 3: Place on lead on the controller end of the black wire and the other on the shortest probe, there should be continuity.

If not, clean the probes and recheck.

3. Test the controller's water level sensor circuit. Reconnect electrical power. Unplug harness from water level sensor, the sump empty light should be ON. Jump all 3 wires togeater. The sump full light should be ON. Jump harness wires white and red, the sump full and sump empty lights will be OFF. Check harness wire by wire for continuity if there is no reaction from the controller during this test.

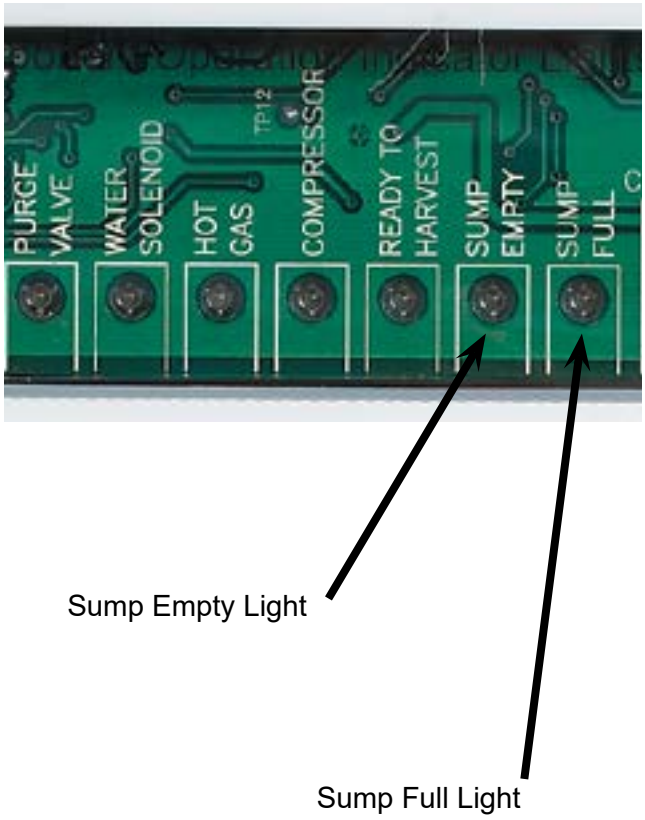

## Temperature Sensors

1. Check controller. If the sensor calibration is completely out of range, the code display will read either 5 or 7.

2. Check with an ohmmeter.

- Open control box cover, unplug sensor from J6. Water temperature probe:
- Measure the temperature of the water.
- Push and release the clean button.
- Wait one minute.
- Measure the resistance of the water probe (two leads next to the open socket) and compare to the resistance in the chart for that temperature. Any reading within 1000 ohms is acceptable.

Discharge sensor:

- Measure the temperature of the discharge line as close to the sensor as possible.
- Measure the resistance of the discharge temperature sensor (two leads farthest away from the open socket on the harness connector) and compare to the resistance in the chart for that temperature. Any reading within 1000 ohms is acceptable.

3. Alternate procedure: Remove both water and discharge sensors from their places on the ice machine. Put both into a container of ice water. Put a thermometer in the water. When the thermometer is at 32 degrees F., check the resistance of each sensor. The resistance should be within 1000 ohms of 32649.

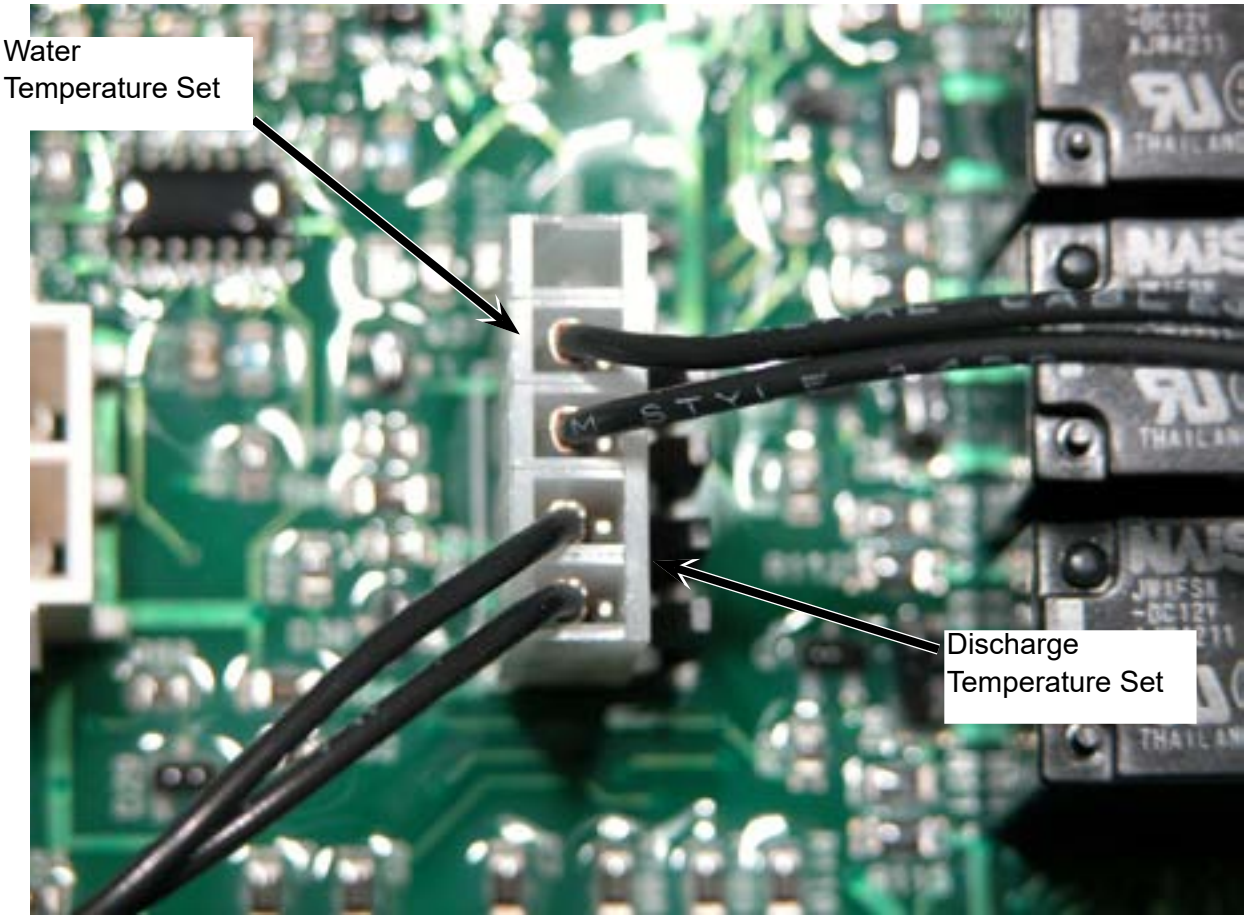

Failure to start.

Single phase models. All have resistance start, capacitor run type motors. Check voltage to compressor at the contactor. Compare the idle voltage (compressor off) to the active voltage (compressor starting). The supply voltage must not be less than the lowest rated voltage for the ice machine. If the voltage is correct, proceed to the next step.

Check starting components. Most models use a PTCR to cut power to the start winding after the compressor has started. Check the PTCR for resistance. The resistance check must be when the PTCR is at room temperature – any temperature between 50 and 100.

At that temperature resistance should be very low between 25 and 50 ohms. Also check resistance to ground, it should be infinite. If the PTCR is good, check the compressor windings.

Measure resistance from Common to ground. It should be infinite. Measure resistance from Common to Run – compare to the chart. Measure resistance from Common to Start – compare to the chart.

Compressor check for high amp draw. Measure amp draw of starting circuit. If it does not drop off immediately after start up, the PTCR should be replaced. It is not practical to check a PTCR for resistance at high temperatures as the resistance drops very fast as the PTCR's temperature falls. If the compressor is drawing excessive amps but is operating, the run capacitor may be open. Disconnect electrical power, discharge the capacitor and measure its resistance. If open, replace it. If shorted to ground, replace it.

Any time the compressor is replaced, the PTCR and run capacitor should also be replaced, or if the model was equipped with a potential relay, start capacitor and run capacitor, those should be replaced with the compressor. Most Scotsman service compressors include those parts.

Some systems use a potential start relay and start capacitor in place of the PTCR.

Potential relay. If the compressor will not start, check the amp draw of the starting circuit. If very low, the potential relay contacts or start capacitor may be open. Measure the resistance of the potential relay contacts and the start capacitor. If either is open it should be replaced. If the compressor starts but draws very high amps from the starting circuit, the potential relay may not switch off. In that case the relay should be replaced.

## Test Procedures - Fan motor

1. Test using the controller's indicator lights.

**Note: Fan pressure control connection must be jumped to perform this test.**

Put the controller into test mode (depress Off for 3 seconds then depress Clean for 3 seconds). At the end of the test cycle, the fan motor will be powered and the Condenser Fan motor indicator light will be on. The fan motor should start and run at that time. If it does not, repeat the test but check the voltage to the fan motor, it must receive full voltage at the fan motor lead connection at the end of the test. If there is voltage and the motor does not operate, replace the motor. If there is no voltage, check the controller high voltage harness connection.

The fan motor lead is the top wire. Check voltage from it to ground, at the end of the test, when the fan motor indicator light is On, there must be voltage from this pin to ground.

**Note: high voltage power is supplied to the bottom pin from the contactor line. Refer to the machine wiring diagram as needed.**

2. Test using an ohmmeter. Disconnect electrical power. Unplug fan motor from harness. Measure fan motor winding resistance. If open, replace the fan motor.

This light is ON when the fan motor should be operating.

Fan Pressure Control, must CLOSE to operate fan motor.

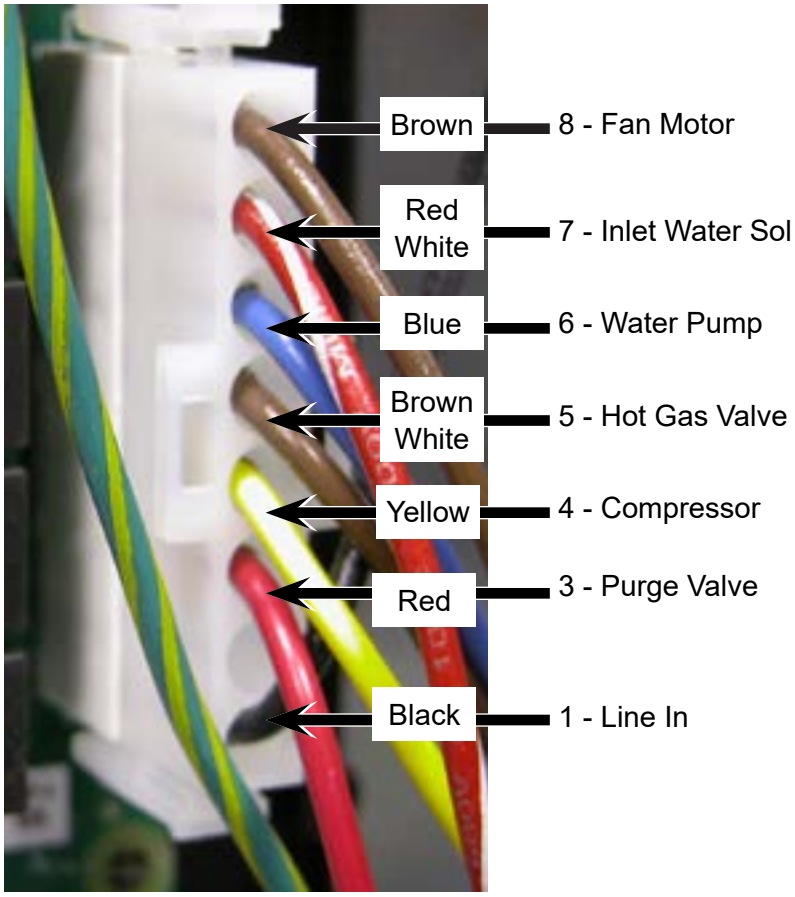

## Test Procedures - Water Pump

1. Test using the controller's indicator lights. Check the indicator light during the freeze cycle. The light will be On for all but the 30 second anti-slush period, so observe the light for one minute. When it is On, check the water pump, it should be operating. If not, check voltage to the pump. If low check the voltage from the controller to ground. The water pump pin is number 6. If there is voltage at that pin to ground, but very low voltage at the pump motor, there must be a broken wire in the harness. If the voltage is low at pin 6, the controller should be replaced.

2. Test using an ohmmeter. Disconnect electrical power. Unplug the water pump motor leads from the harness. Measure the resistance of the motor windings. If open, replace the pump. Measure resistance to ground. If there is any, replace the pump.

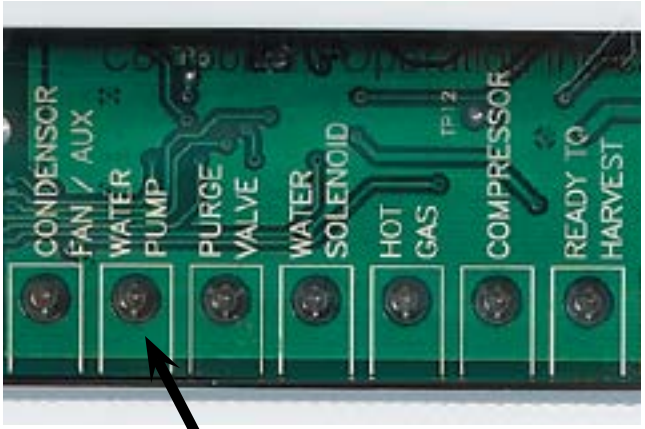


Water Pump light is ON when pump is operating.

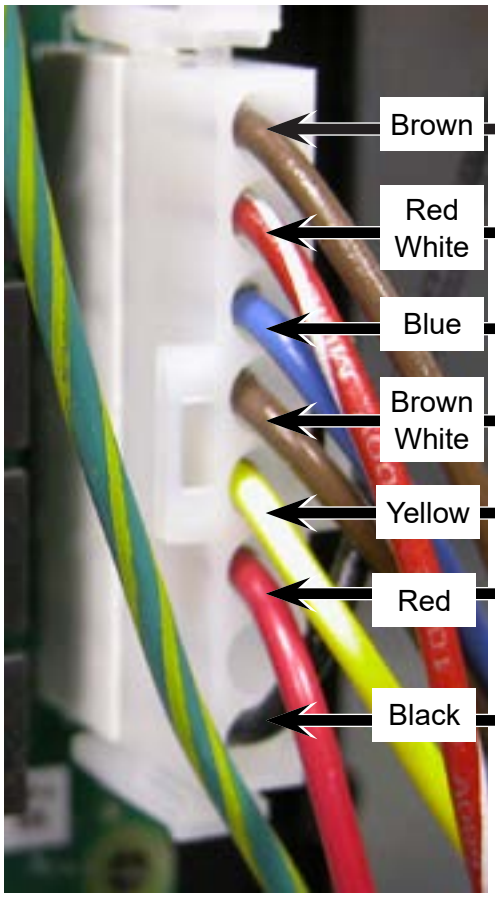

**Test Procedure - Purge valve**

1. Test using the controller's indicator lights.

- Shut unit off by holding the Off button for 3 seconds. Wait four minutes.
- Push and release the On button, observe the Purge Valve indicator light. As the unit drains the reservoir, the purge valve will be powered. When it gets power, the indicator light will be ON.
- If the purge valve does not open to drain the reservoir when its indicator light is on, do a voltage check. Shut the unit down by holding the Off button in for 3 seconds. Unplug the harness connection from the purge valve.
- Wait four minutes. Push and release the On button to restart the machine.
- As the unit drains the reservoir, the purge valve connection should receive full voltage. If it does, the purge valve should be replaced. If there is no voltage, check voltage from the controller to ground. The purge valve pin is 3 (dump valve on wiring diagram). If there is voltage from that pin to ground, but low voltage at the valve harness connection, the harness has a broken wire or poor connection and must be replaced.
- If the voltage to ground is low, the controller should be replaced.

**Note: The coil of this valve is internally rectified, and will normally show infinite resistance when tested with an ohmmeter**

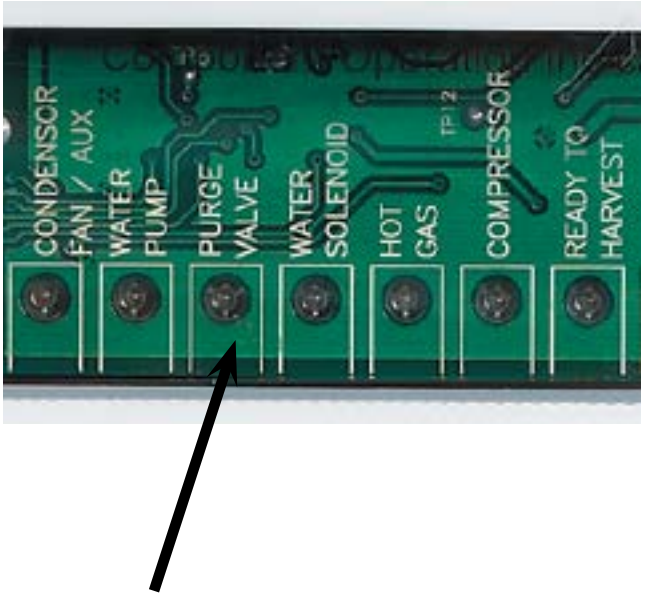


This light will be ON when the Purge Valve is powered.

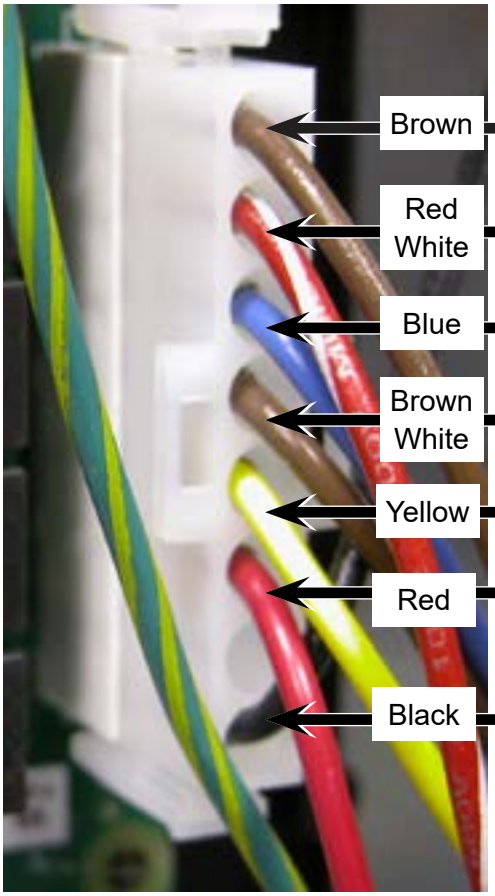

## Test Procedure - Compressor contactor

1. Test using the controller's indicator lights. When the unit is in ice making mode (continuous F in the display) the compressor contactor will have power.

- Check the Compressor indicator light, when it is on the compressor contactor will have pulled in. If it is not, do a voltage check.
- Place voltmeter leads on the coil of the contactor. There should be full voltage.
- If there is full voltage present and the contactor has not pulled in, replace the contactor.
- If there is no voltage check if the high pressure cut out is open. If the high pressure cut out is closed, check for voltage from the controller to ground. The contactor pin is 4. Check from 4 to ground, or on 220 volt models, to the other power leg (usually L2) when the compressor indicator light is on. There should be voltage. If not, replace the controller.
- If there is voltage at the controller but not at the contactor coil, the harness wires or connectors are damaged and must be replaced.

2. Test using an ohmmeter. Test the coil of the contactor for continuity or shorts to ground. Replace if open or shorted.

3. Check connections and contacts. Be sure connections are tight and that the contacts are not burnt. Replace any contactor with burnt contacts.

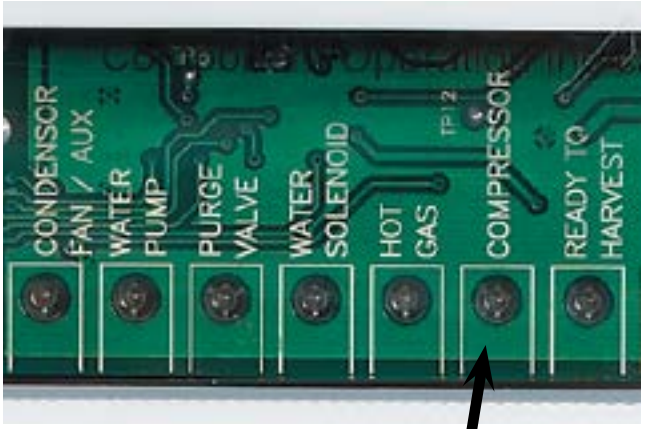


This light is ON when the compressor is operating.

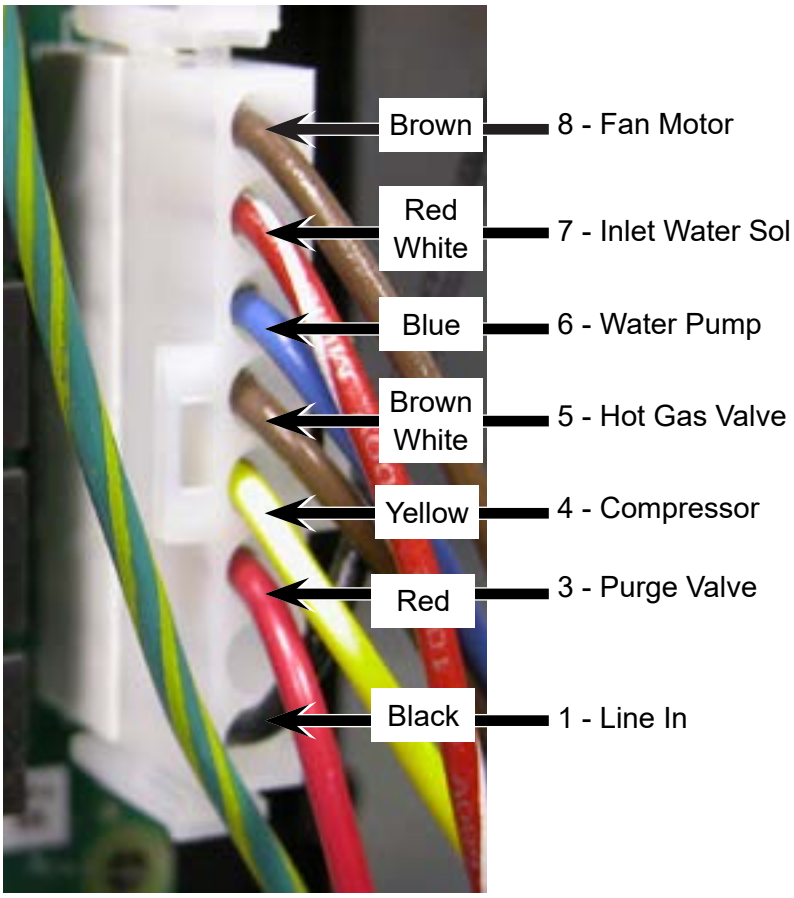

## Test Procedures - Pressure switches

There are two pressure switches: Fan and High Pressure cut out.

Fan. The fan pressure switch will open to shut the fan motor off at a certain pressure and re-close at a preset higher pressure.

High pressure cut out. The high pressure cut out switch will open at a preset pressure, shutting off power to the compressor contactor. After the pressure has fallen to another preset level, the switch will re-close and the contactor coil will be engergized.

To Test Fan Pressure Switch:

A. Attach refrigeration gauge set to high side port.

B. Unplug both wires from fan pressure control. Be SURE the wire's terminals are wrapped in electrical tape to prevent short circuits to ground during the test.

C. Connect ohmmeter to terminals of fan pressure control..

D. Switch ice machine on, observe pressure that the pressure control closes at, compare to spec. Switch unit off, allow system to equalize, observe pressure the pressure control opens at, compare to spec.

To Test High Pressure Switch:

A. Attach refrigeration gauge set to high side port.

B. Unplug fan motor or shut water off if water cooled.

C. Measure voltage between contactor side terminal of high pressure control and ground.

D. Switch ice machine on, observe pressure that the pressure control opens at, compare to spec. Allow system to equalize, observe the pressure that the pressure control closes at, compare to spec.

Transformer

Check secondary voltage, it must be between 10 and 15.5 AC volts. Replace if no voltage is output or if above or below the acceptable voltage..

Controller

The controller’s software operation is confirmed if it is functioning. Execute the test to confirm its operation of the loads. Illumination of a diagnostic code (other than E) is not an indication of controller failure. Each code requires its own diagnosis.

## Test Procedures - Liquid Line Solenoid

1. Test using the controller's indicator lights. Put the controller into test mode (depress Off for 3 seconds then depress Clean for 3 seconds). At the end of the test cycle, the liquid line valve will be powered and the Condenser Fan motor indicator light will be on. The liquid line valve should be open at that time.

If it is not, repeat the test but check the voltage to the liquid line valve coil, it must receive full voltage at the liquid line lead connection at the end of the test. If there is voltage and the valve does not operate, replace the valve coil.

If there is no voltage, check the controller high voltage harness connection. The liquid line solenoid lead is the top wire. Check voltage from it to ground, at the end of the test, when the Condenser Fan indicator light is On, there must be voltage from this pin to ground or, on 220 volt models, to the other power leg.

**Note: high voltage power is supplied to the bottom pin from the contactor line. Refer to the machine wiring diagram as needed.**

2. Test using an ohmmeter. Disconnect electrical power. Unplug liquid line coil from harness. Measure liquid line coil resistance. If open, replace the liquid line valve coil.

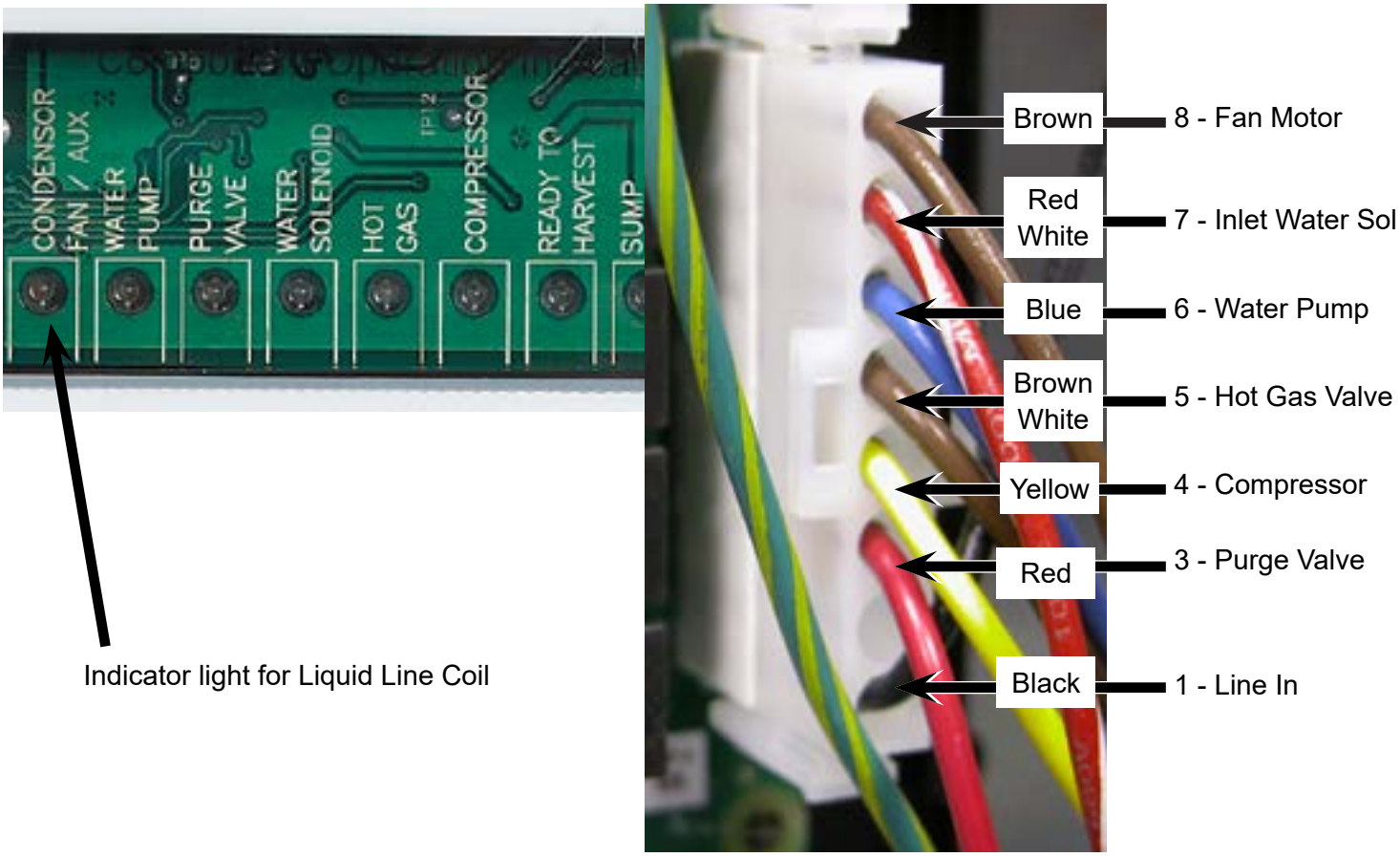

## Test Procedure - Inlet Water Solenoid Valve

1. Test using the controller's indicator lights.

Shut unit off by holding the Off button for 3 seconds. Wait four minutes.

Push and release the On button, observe the Water Solenoid indicator light. After the unit drains the reservoir, the inlet water valve will be powered to refill the reservoir. When it gets power, the indicator light will be ON.

If the water valve does not open to fill the reservoir when its indicator light is on, do a voltage check. Shut the unit down by holding the Off button in for 3 seconds. Unplug the harness connection from the inlet water valve. Wait four minutes.

Push and release the On button to restart the machine. After the unit drains the reservoir, the inlet water valve connection should receive full voltage. If it does, the inlet water valve should be replaced.

If there is no voltage, check voltage from the controller. The inlet water solenoid valve pin is 7. If there is voltage from that pin to ground, or on 220 volt models to the other power leg, but low voltage at the valve harness connection, the harness has a broken wire or poor connection and must be replaced. If the voltage to ground or other leg is low, the controller should be replaced.

2. Test using an ohmmeter. Disconnect electrical power. Unplug coil from harness. Measure coil resistance. If open, replace the inlet water solenoid.

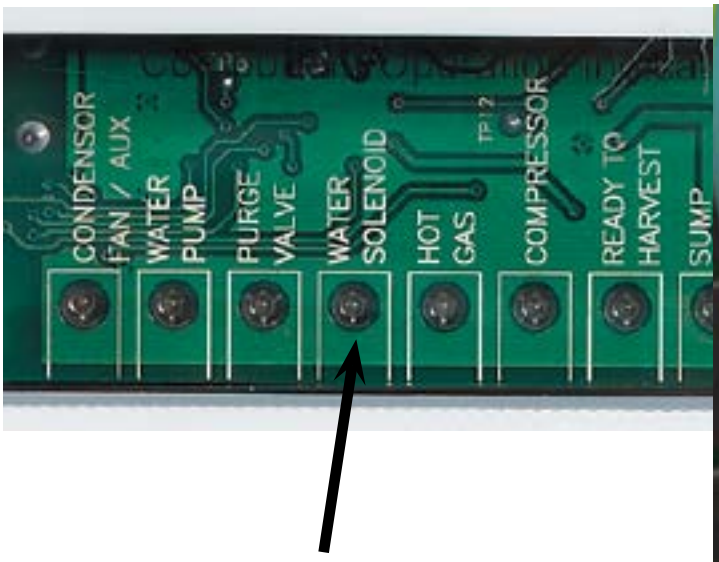


Light is ON when inlet water solenoid is in operation.

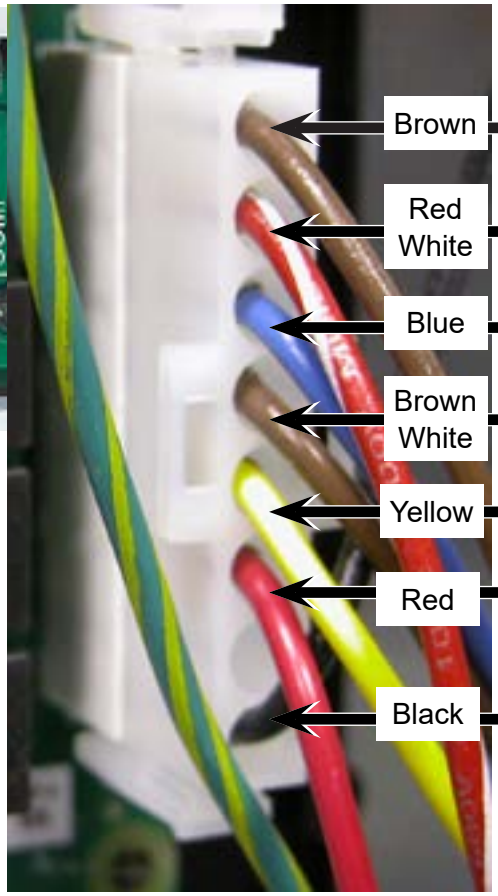

## Test Procedure - Harvest Assist

1. Test using the controller's indicator lights. Push and release the Harvest button. The Hot Gas indicator light will be on. At the same time the Harvest Assist Solenoid or Motor will be powered. If the ice on the evaporator is thin, the ejection pin will extend. If the ice is nearly full sized, the pin will press against the ice until it releases from the evaporator, then the pin will extend. If the pin extends, the solenoid or motor is good. If not, do a voltage check.

Unplug the high voltage harness from the harvest assist solenoid. Attach a voltmeter to the harness connector. Push and release the Harvest button. There should be full voltage at the connector.

If there is and the solenoid does not extend, replace the solenoid. If full voltage is not present, check voltage at the controller. If there is no voltage, check voltage from the controller to ground. The hot gas / harvest assist pin is 5.

If there is voltage from that pin to ground, but low voltage at the solenoid harness connection, the harness has a broken wire or poor connection and must be replaced. If the voltage to ground is low, the controller should be replaced.

---

**Note: The coil of this valve is internally rectified, will normally show infinite resistance when tested with an ohmmeter.**

---

### Hot Gas or Vapor Valve

1. Test using the controller's indicator lights. If the unit is running, or has been off for more than 4 minutes, push and release the Harvest button. The Hot Gas indicator light will be on and the hot gas valve will be energized. The compressor will force discharge gas into the evaporator inlet, warming it.

If the evaporator inlet does not warm up, do a voltage check. Shut the unit off by holding the Off button in for 3 seconds. Unplug the high voltage harness from the hot gas solenoid. Attach a voltmeter to the harness connector. Wait 4 minutes.

Push and release the Harvest button. There should be full voltage at the connector. If there is and the solenoid does not open, replace the solenoid coil. If full voltage is not present, check voltage at the controller. If there is no voltage, check voltage from the controller to ground or on 220 volt models to the other power leg. The hot gas pin is 5. If there is voltage from that pin to ground, but low voltage at the solenoid harness connection, the harness has a broken wire or poor connection and must be replaced. If the voltage to ground is low, the controller should be replaced.

2. Test with an ohmmeter. Disconnect electrical power. Unplug high voltage harness from hot gas or vapor valve. Measure resistance of hot gas or vapor valve coil. If open, replace the coil.

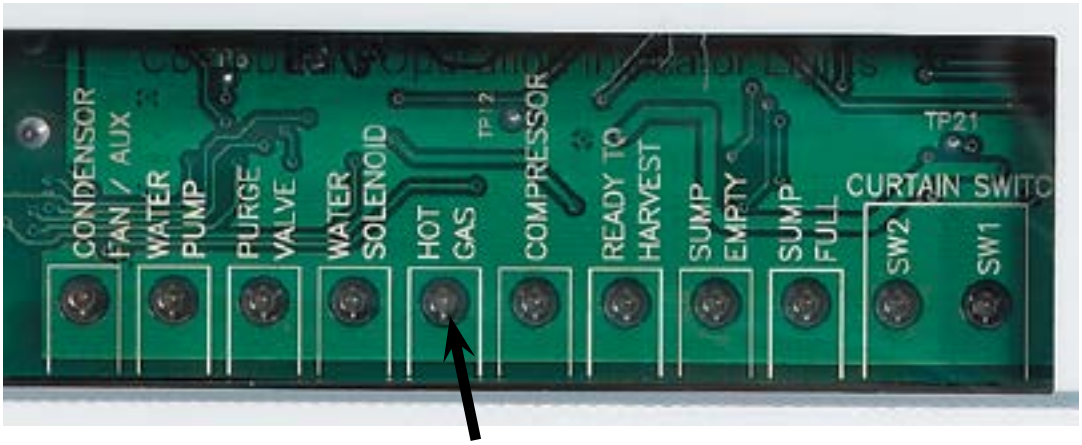


This light will be ON during harvest. Both the Hot Gas Valve coil and the Harvest Assist will have power when this light is ON.

Inlet Water Solenoid Valve

1 Disconnect electrical power

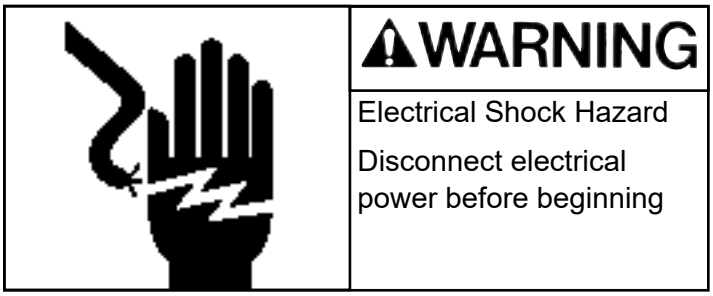


2 Shut off the water supply.

3 Remove front and left side panels.

4 Unplug wire from coil.

5 Disconnect water supply tube from the inlet of the valve.

6 Disconnect the water outlet tube.

7 Remove the two mounting screws holding the valve to the back panel.

8 Pull the valve forward and out of the machine.

Fan Blade or Motor

1 Push and release the Off button

2 Disconnect electrical power.

3 Remove front panel and left side panel.

4 Unplug fan motor wire leads.

5 Remove fan motor mounting brackets from shroud. Note: Fastener size is 3/8” hex

6 Carefully remove fan motor and blade assembly from machine cabinet.

7 Loosen set screw, pull fan blade from motor shaft.

8 If the blade is the only part being changed, reverse to reassemble. Note: blade mounts purge to end of motor shaft.

9 If the motor will be changed, remove mounting brackets from fan motor. Note: Fastener size is ¼” hex.

10 Reverse to reassemble.

Harvest Assist Solenoid / Mechanism

1 Remove front panel.

2 Push and release Manual Harvest button

3 Disconnect electrical supply

**⚠WARNING**

Electrical Shock Hazard

Disconnect electrical power before beginning

4 Remove plastic cover from harvest assist.

5 Unplug wires from solenoid or mechanism.

6 Remove screws and solenoid or mechanism from cabinet

7 Reverse to reassemble.

Note: Solenoid replaced by mechanism beginning in 2013. Solenoid prior to 2010 may be eligible for recall. See www.scotsman-ice.com for details

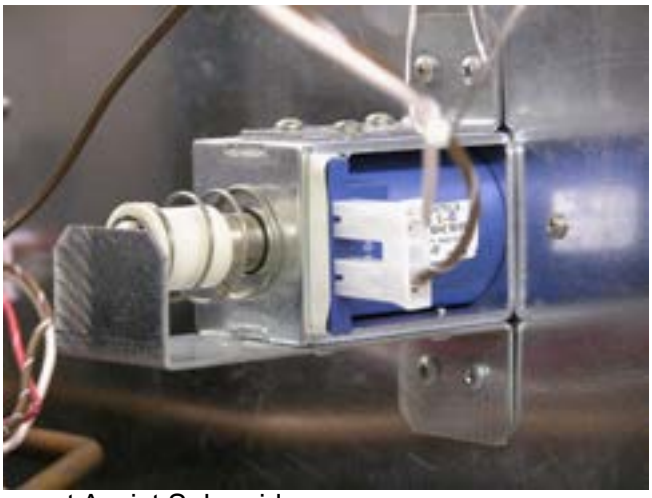

Harvest Assist Solenoid

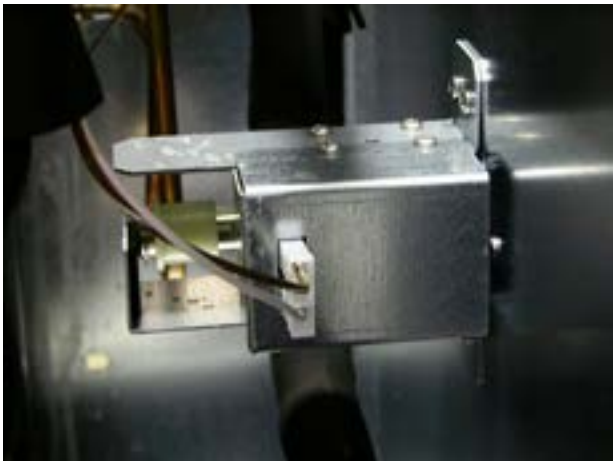

2010 and later Harvest Assist Solenoid

Harvest Assist Mechanism, use began 2013

Ice thickness sensor

1. Push and release the Off switch.
2. Remove front and top panels.
3. Push and release the Harvest switch
4. Remove the evaporator cover.
5. Disconnect electrical power.
6. Open the control box.

**⚠WARNING**

Electrical Shock Hazard

Disconnect electrical power before beginning

7. Remove curtain.
8. Locate sensor, squeeze mounting legs together to release it from the mounting bracket.
9. Remove sensor, follow wire back to control box.
10. Disconnect from controller connection J10.
11. Remove sensor from machine.
12. Reverse to reassemble.
13. Set initial probe-to-evaporator-surface gap using a 7/32” drill bit as a gauge.

---

**Note: Thin ice, short freeze cycles, and premature harvest can be the result of a dirty ITS and/or Irregular water flow over the spillway. Please ensure that the sensor and spillway are properly cleaned before proceeding with replacement. If the sensor is physically intact replacement is not necessary and may result in a rejected warranty claim if turned in for warranty purposes.**

---

### Capacitor (run)

1. Disconnect electrical power.
2. Remove front panel.
3. Open control box cover.
4. Remove right side of control box.
5. Remove metal barrier from control box
6. Remove screw holding strap to back of the control box.
7. Remove wires from capacitor
8. Connect wires to new capacitor, refer to wiring diagram as needed.
9. Reverse to reassemble.

### Contactor

1. Disconnect electrical power.
2. Remove front panel.
3. Open control box cover.
4. Remove right side of control box.
5. Remove metal barrier from control box
6. Remove mounting screws holding contactor to control box.
7. Exchange wires from old controller to new. Refer to wiring diagram as needed.
8. Reverse to reassemble.

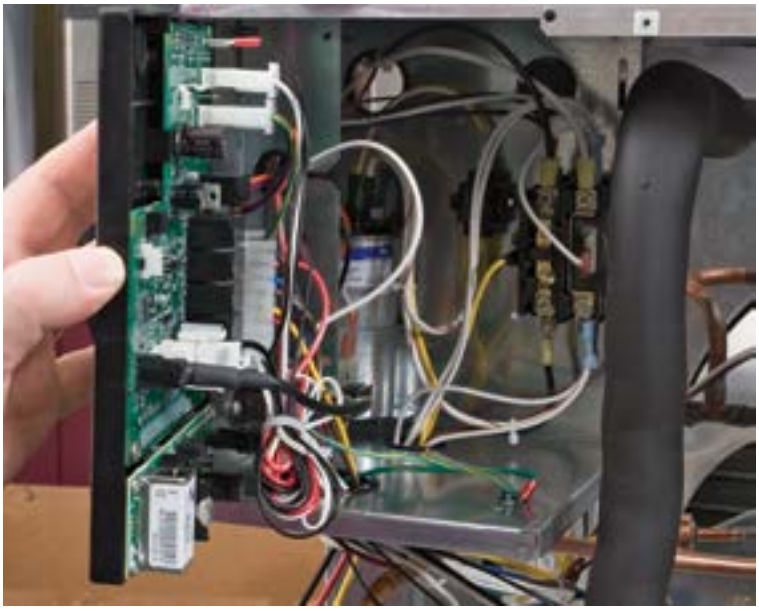

Controller

1. Disconnect electrical power.

**⚠WARNING**

Electrical Shock Hazard

Disconnect electrical power before beginning

2. Remove front panel.
3. Open control box door.
4. Unplug all wires from controller.
5. Remove screws holding controller to door
6. Push controller snaps down and pull controller from
7. Before touching new controller, discharge any stati machine cabinet.
8. Rotate selector switch to the proper model number
9. Install new controller on mounting bracket, secure with original screws.
10. Attach all wires removed.
11. Shut control box cover.
12. Switch on the electrical power.

Controller's Model Selector Switch (service controller)

### Curtain

- Push and hold the Off button to shut the machine off.
- Remove front panel.
- Remove evaporator cover.
- Push inside tab in to release front curtain pin from holder.
- Pull curtain from machine.
- Reverse to reassemble.

**Note: Two plate machines must place curtain on correct evaporator. Exception is the articulated curtain, which has magnets on both ends.**

- Push and release the ON button to restart the machine.

### Curtain switch

1. Push and hold the Off button to shut the machine off.
2. Disconnect electrical power

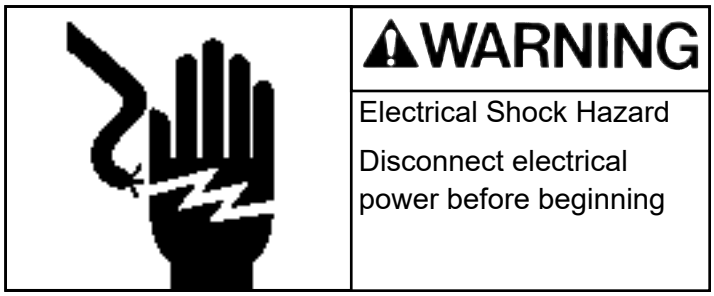


3. Remove front panel.
4. Remove evaporator cover.
5. Open control box.
6. Locate curtain switch on evaporator mounting bracket. Pull switch from its snaps or remove 2 screws.
7. Dismount wires from sump cover and remove from J7 or J8 connector on control board.
8. Reverse to reassemble. Be sure wires are re-mounted to sump cover edge.

### Purge valve

1. Push and hold the Off button to shut the machine off.
2. Disconnect electrical power.

**⚠WARNING**

Electrical Shock Hazard

Disconnect electrical power before beginning

3. Remove front panel.
4. Remove left side panel.
5. Unplug wires from valve coil.

Note: The coil can be removed from the valve body by rotating it 1/8 turn CW. After removal of the coil the spring and plunger can be taken out.

6. Remove screws holding valve to mounting bracket.
7. Remove inlet and outlet hoses
8. Remove valve from cabinet.
9. Reverse to reassemble
10. Push and release the On button to restart the machine

### Water level sensor

1. Push and hold the Off button until the machine shuts off.
2. Remove the front panel.
3. Locate water level sensor.
4. Squeeze the locking tabs together and pull the sensor up and out of the sump.
5. Unplug the electrical connection from the sensor.
6. Reverse to reassemble

### Water pump

1. Push and hold the Off button until the machine shuts off.

**⚠WARNING**

Electrical Shock Hazard

Disconnect electrical power before beginning

2. Remove the front panel.
3. Unplug the water pump
4. Rotate the pump CCW about 1/8 turn to release it.
5. Lift pump up and remove hose
6. Attach hose to new pump
7. Install in pump bracket.
8. Rotate CW about 1/8 turn to lock it in place.
9. Plug pump into harness
10. Return panels to their original positions and secure with the original screws.
11. Push and release the ON button to restart the machine.

## Refrigeration Removal and Replacement

### Evaporator

1. Remove panels as needed for evaporator access.
2. Remove evaporator cover.
3. If the machine was in operation, push and release the Harvest button to warm up the evaporator.
4. Disconnect electrical power.

**⚠WARNING**

Electrical Shock Hazard

Disconnect electrical power before beginning

5. Remove harvest assist
6. Recover refrigerant.
7. Remove curtain
8. Remove water distributor
9. Release ice thickness sensor
10. Remove water distributor bracket from the top of the evaporator
11. Connect nitrogen bottle to discharge access port. Open both access valves.
12. Open nitrogen valve
13. Unsweat the inlet and outlet refrigerant tubes. Use caution when heating the tubing, do not damage the freezing compartment walls.
14. Shut nitrogen valve.
15. Gain access to the right side of the unit. Remove mounting screws holding the evaporator to the freezing compartment wall. Note: fastener size is 5/16” hex.
16. Remove the evaporator from the ice machine.
17. Attach new evaporator to freezing compartment wall, but do not secure tightly at this time.
18. Install the harvest assist. Be sure pin moves freely thru ejection hole.
19. Open nitrogen valve
20. Reconnect inlet and outlet tubes by brazing the copper tubes together.
21. Replace filter drier.
22. Shut access valves, remove nitrogen bottle.
23. Evacuate to at least 300 microns.
24. Weigh in the nameplate charge. Check for leaks.
25. Return ice thickness sensor bracket, ice thickness sensor, water distributor, curtain and evaporator cover to their original positions.
26. Reconnect electrical power.
27. Return panels to their original positions.

**Compressor**

1. Remove front panel.
2. If the machine was in operation, push and release the Harvest button to shut it down. Wait until the harvest cycle has ended so the evaporator has no ice on it.
3. Open the replacement compressor box. Check the compressor nameplate, be SURE that the replacement compressor is the correct one for the unit.
4. Disconnect electrical power.

**⚠WARNING**

Electrical Shock Hazard

Disconnect electrical power before beginning

5. Recover refrigerant.
6. Remove compressor terminal cover and disconnect electrical leads.
7. Remove all the mounting bolts.
8. Open both discharge and suction access valves
9. Connect nitrogen to discharge access valve.
10. Open nitrogen valve.
11. Unsweat the suction, discharge and process tubes.
12. Unsweat the drier from the liquid line. Remove it.
13. Shut the nitrogen valve.
14. Remove the compressor from the ice machine. Note: Some models may require the control box to be moved slightly to allow compressor replacement.
15. Immediately place new compressor in ice machine.
16. Open nitrogen bottle and braze compressor suction, discharge and process joints together. Braze new drier into system.
17. Shut off nitrogen, shut access valves.
18. Evacuate to at least 300 microns.
19. Replace PTCR and run capacitor.
20. Weigh in the nameplate charge. Check for leaks.
21. Reconnect electrical leads.
22. Attach compressor terminal cover.
23. Reconnect electrical power.
24. Return front panel to their original positions.

**Note: If the compressor is being returned for warranty, braze the stubs shut and tag the compressor with the required information.**

### Thermostatic Expansion Valve

1. Remove front panel.
2. If the machine was in operation, push and release the Harvest button to shut it down. Wait until the harvest cycle has ended so the evaporator has no ice on it.
3. Disconnect electrical power.
4. Recover refrigerant.

**⚠WARNING**

Electrical Shock Hazard

Disconnect electrical power before beginning

5. Remove insulation covering expansion valve and bulb.
6. Remove strap securing bulb to suction line.
7. Open both discharge and suction access valves
8. Unsweat the expansion valve from the liquid line. Remove it.
9. Unsweat the drier from the liquid line. Remove it.
10. Connect nitrogen to discharge access valve.
11. Immediately place new valve in ice machine.
12. Open nitrogen bottle and braze expansion valve inlet and outlet joints together. Braze new drier into system.
13. Shut off nitrogen, shut access valves.
14. Evacuate to at least 300 microns.
15. Weigh in the nameplate charge. Check for leaks.
16. Attach bulb to suction line. Position at 4 or 8 o'clock on the tube. Secure tightly but do not crush the bulb with the strap.
17. Attach valve and bulb insulation.
18. Reconnect electrical power.
19. Return front panel to it’s original position.

### Vari-Smart™ or KVS Adjustable ice level option

The adjustable ice level control is an optional add-on system consisting of an control board, label and sensor.

The control board fits above the standard control and connects to it using connector J4. The sensor mounts to the base of the ice machine through a hole in the base.

The control has an adjustment knob. Rotating the knob CW lowers the maximum ice level that the ice machine will maintain in the bin or dispenser. When the ice level is at or above maximum for the setting, the bin full light on the ultrasonic board will be ON.

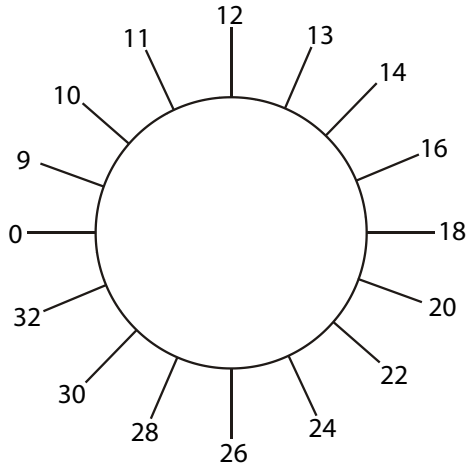

### Vari-Smart Check Out

If the machine's sump water is below 40 degrees or so, the Vari-Smart will only signal Bin Full at the end of a harvest cycle. If above 40, it should do so at the beginning of freeze. The easiest way to check it is as follows:

1. Install the Vari Smart on the Prodigy.
2. Set the Vari-Smart on 32" (Min in photo above).
3. Connect power to the unit.
4. Put the unit into a Manual Harvest
5. Position something about 12" from the sensor. The object should be a solid, flat item like a panel or manual.
6. Cycle the curtain switch to terminate harvest (open and close the curtain – both on a two plate model).
7. The unit should shut off on bin full at the end of the harvest cycle. The Bin Full light will be on and a b will show in the code display of the controller.
8. Rotate the selector to the correct position and restart the ice machine.

**Note: If a Smart-Board is on the machine, and it is controlling the Vari-Smart, rotating the Vari-Smart's knob will have no affect. The Smart-Board's control will have to be disengaged to perform this check out.**

# Click here to navigate to performance data

# Wiring Diagram

## MC0322, MC0722, MC0330, MC0530, MC0630 A/W Single Phase

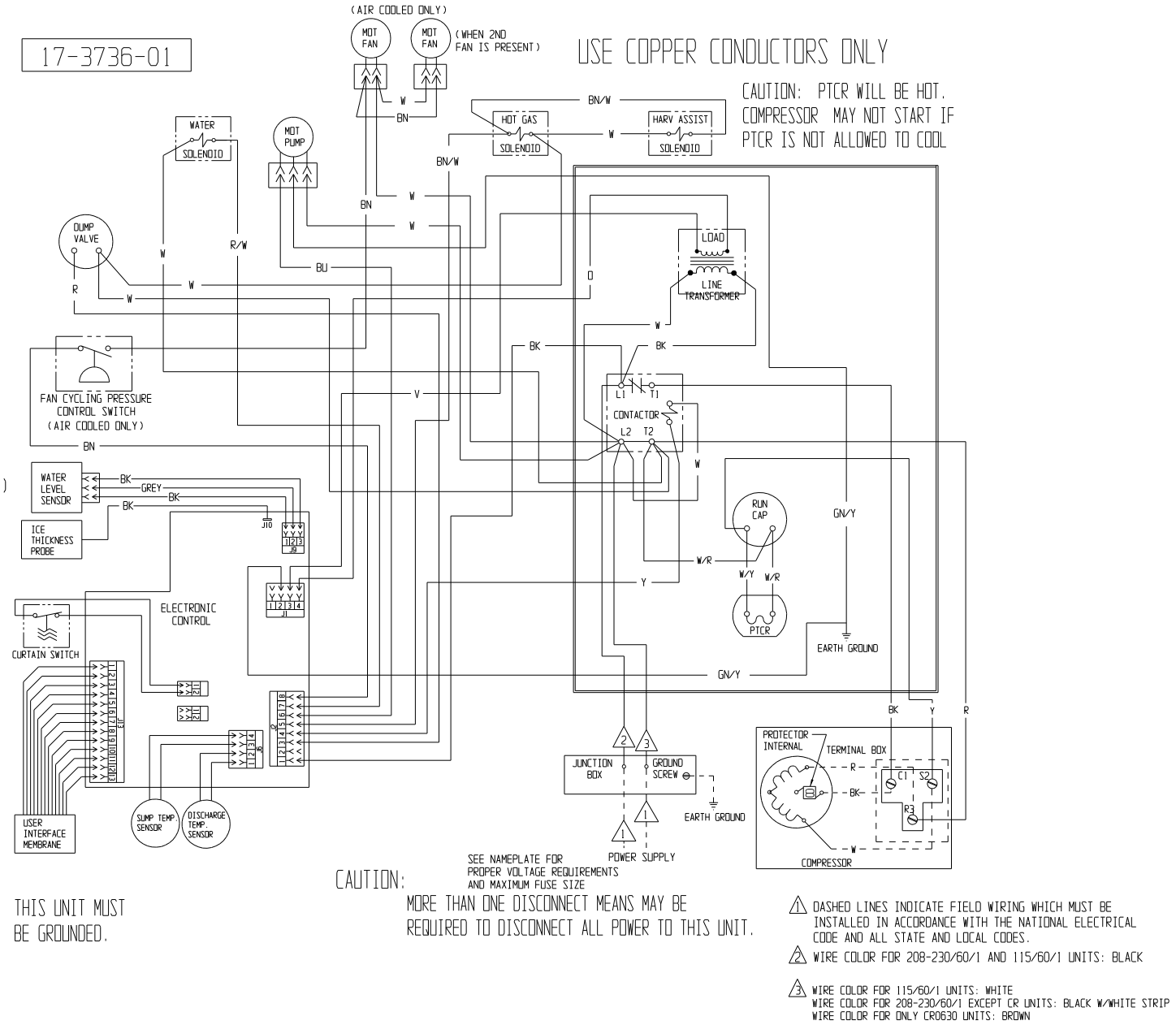

# Schematic Diagram

## MC0322, MC0722, MC0330, MC0530, MC0630 A/W Single Phase

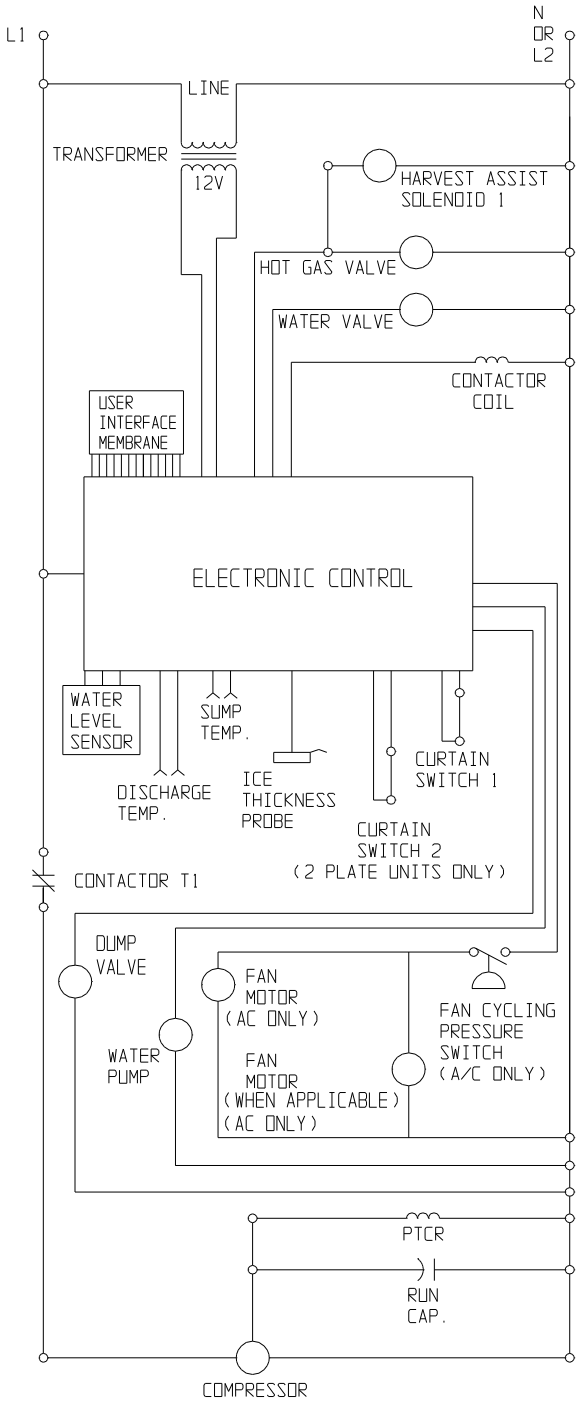

# Wiring Diagram

## MC0522, MC0830, MC1030 A/W Single Phase

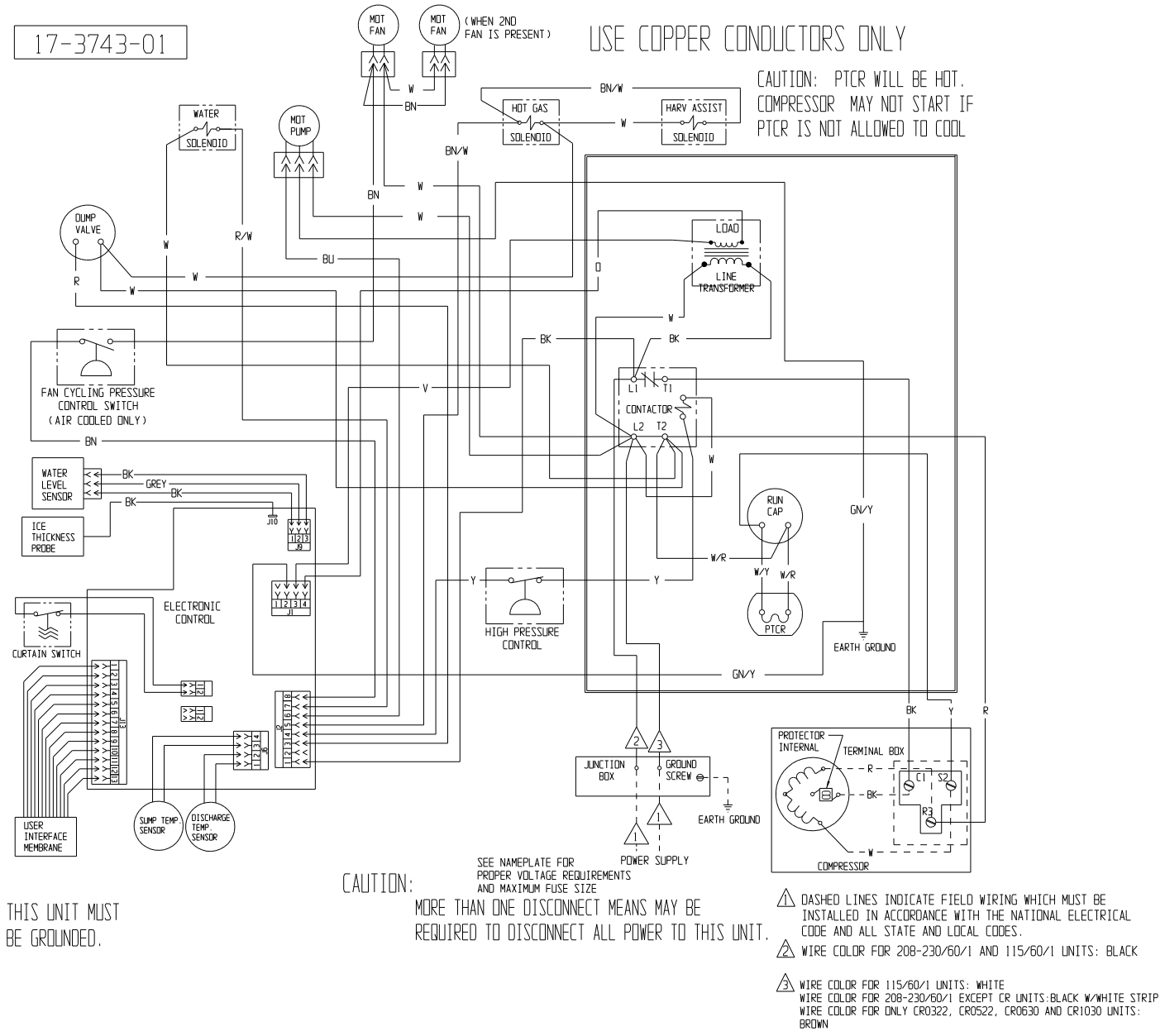

# Schematic Diagram

## MC0522, MC0830, MC1030 A/W Single Phase

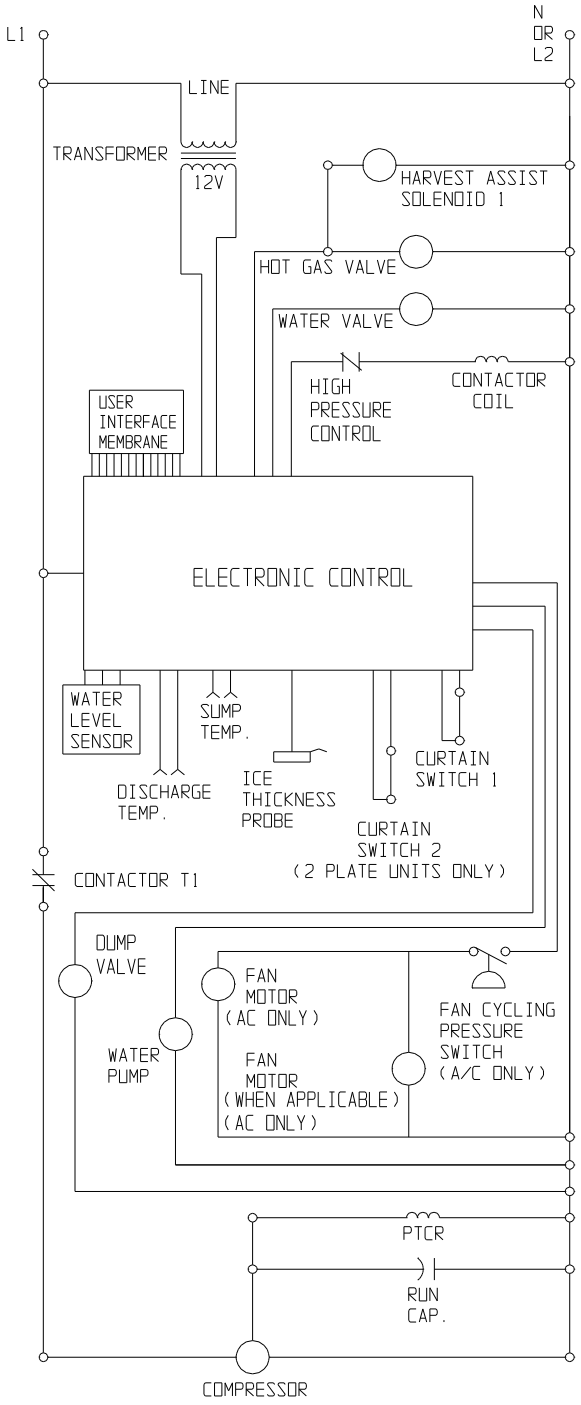

# Wiring Diagram MC0530, MC0630 Remote Single Phase

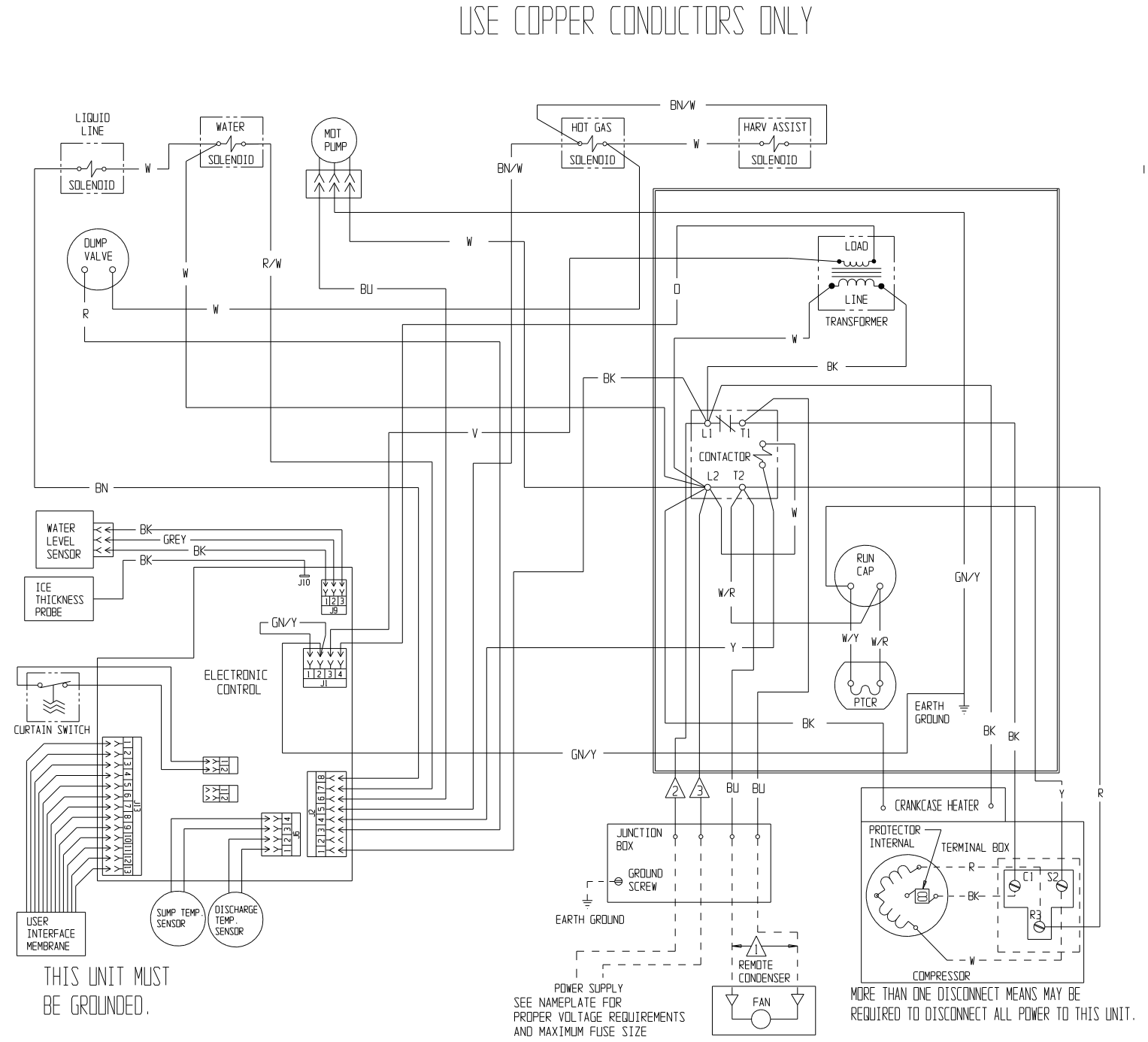


3 WIRE COLOR FOR 115/60/1 UNITS: WHITE
WIRE COLOR FOR 208-230/60/1 EXCEPT CR UNITS: BLACK W/WHITE STRIP
WIRE COLOR FOR ONLY CR0630 UNITS: BROWN

1 DASHED LINES INDICATE FIELD WIRING WHICH MUST BE INSTALLED IN ACCORDANCE WITH THE NATIONAL ELECTRICAL CODE AND ALL STATE AND LOCAL CODES.

2 WIRE COLOR FOR 208-230/60/1 AND 115/60/1 UNITS: BLACK

# Schematic Diagram MC0530, MC0630 Remote Single Phase

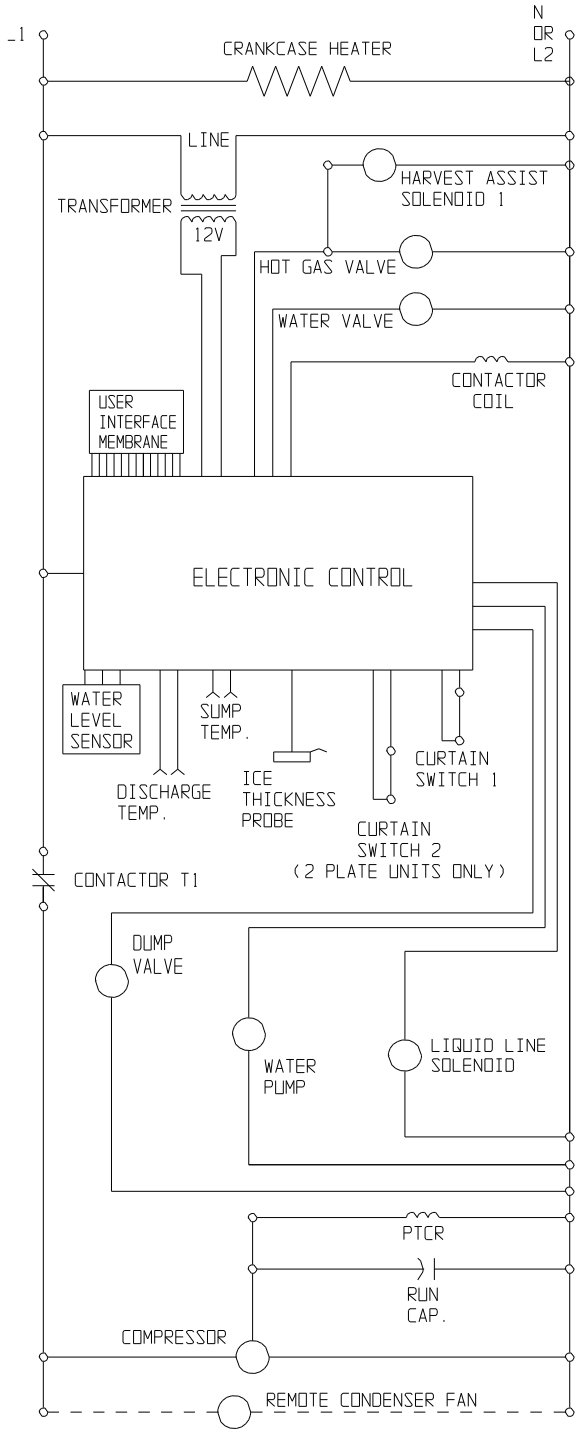

# Wiring Diagram MC0830 Air Three Phase

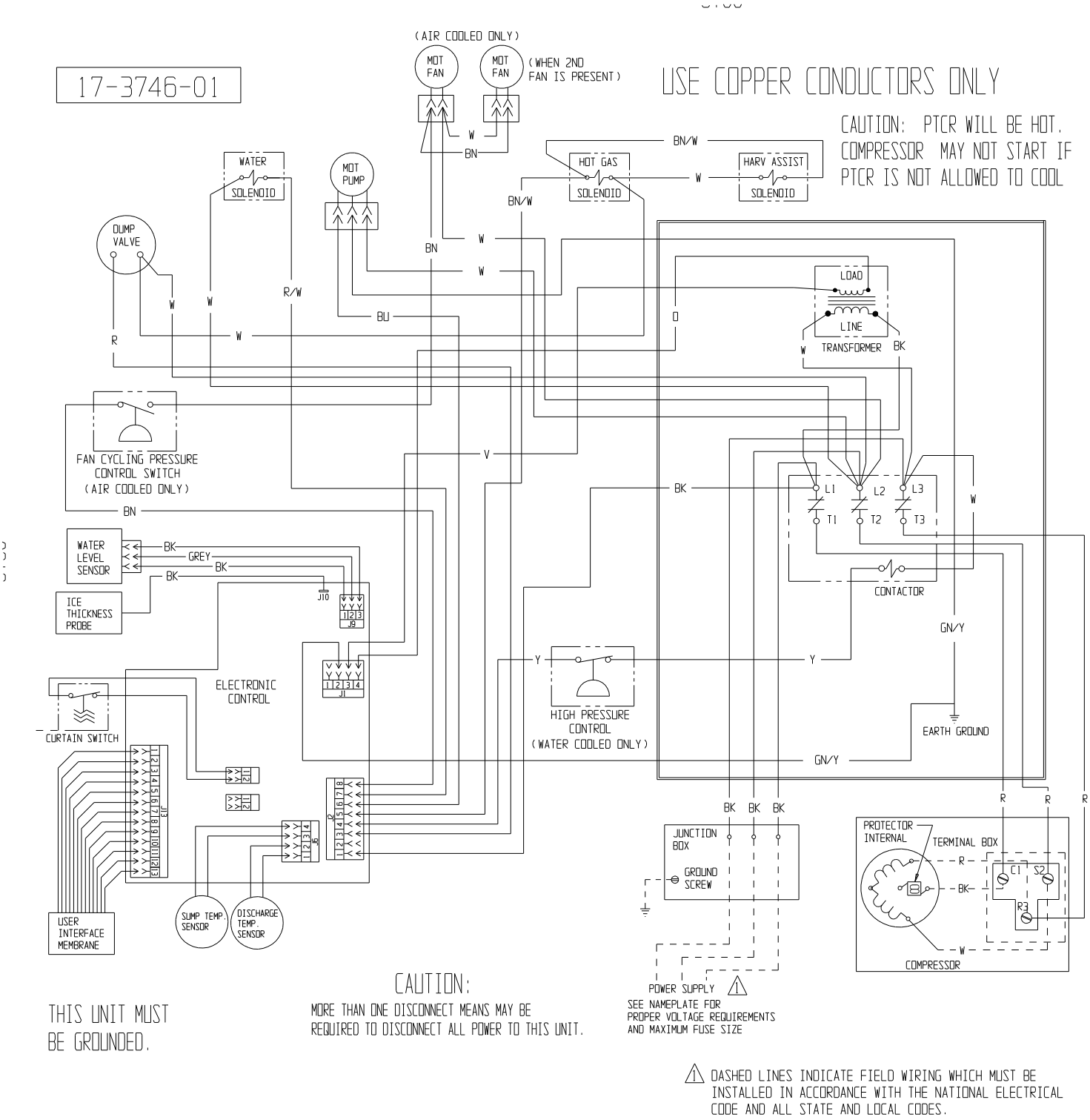

# Wiring Diagram MC0830 Air Three Phase

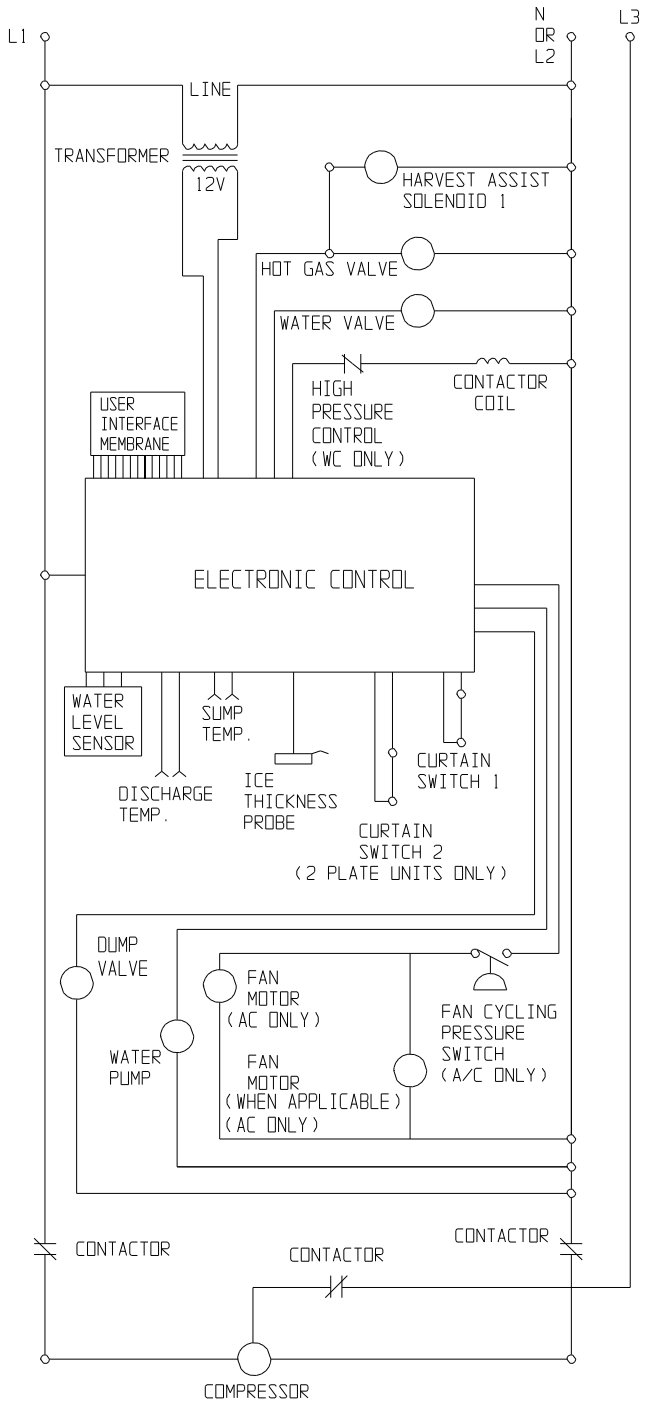

# Wiring Diagram MC1030 Remote Three Phase

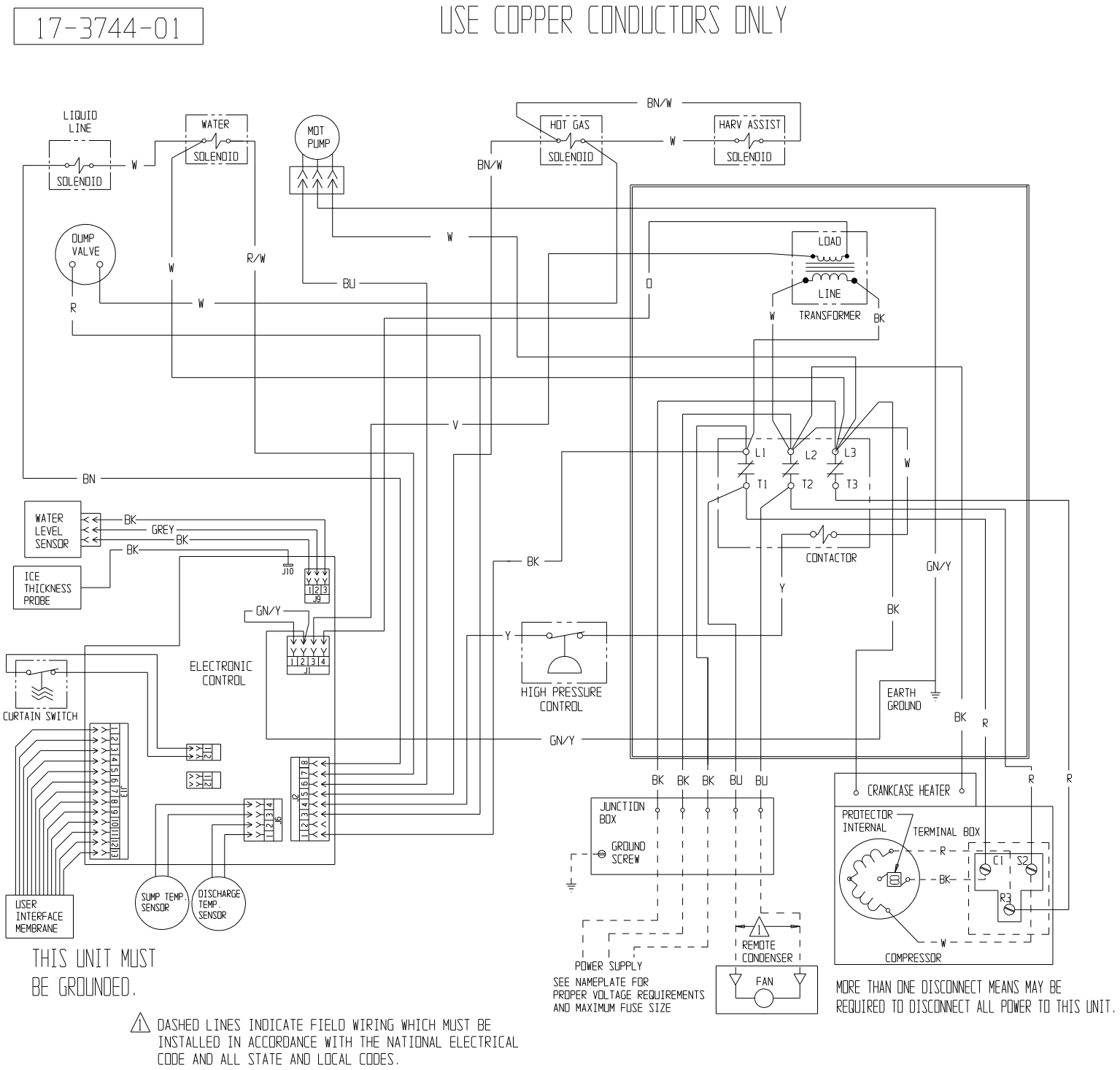

# Schematic Diagram MC1030 Remote Three Phase

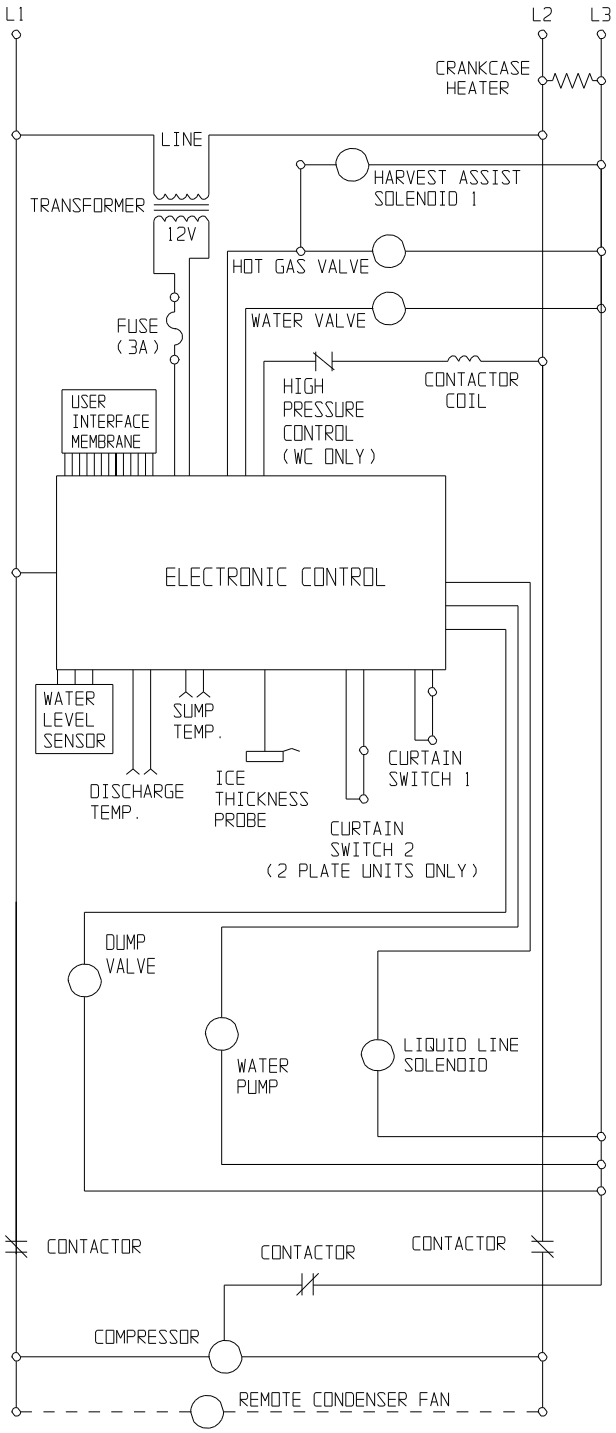

# Wiring Diagram MC0830, MC1030 Remote Single Phase

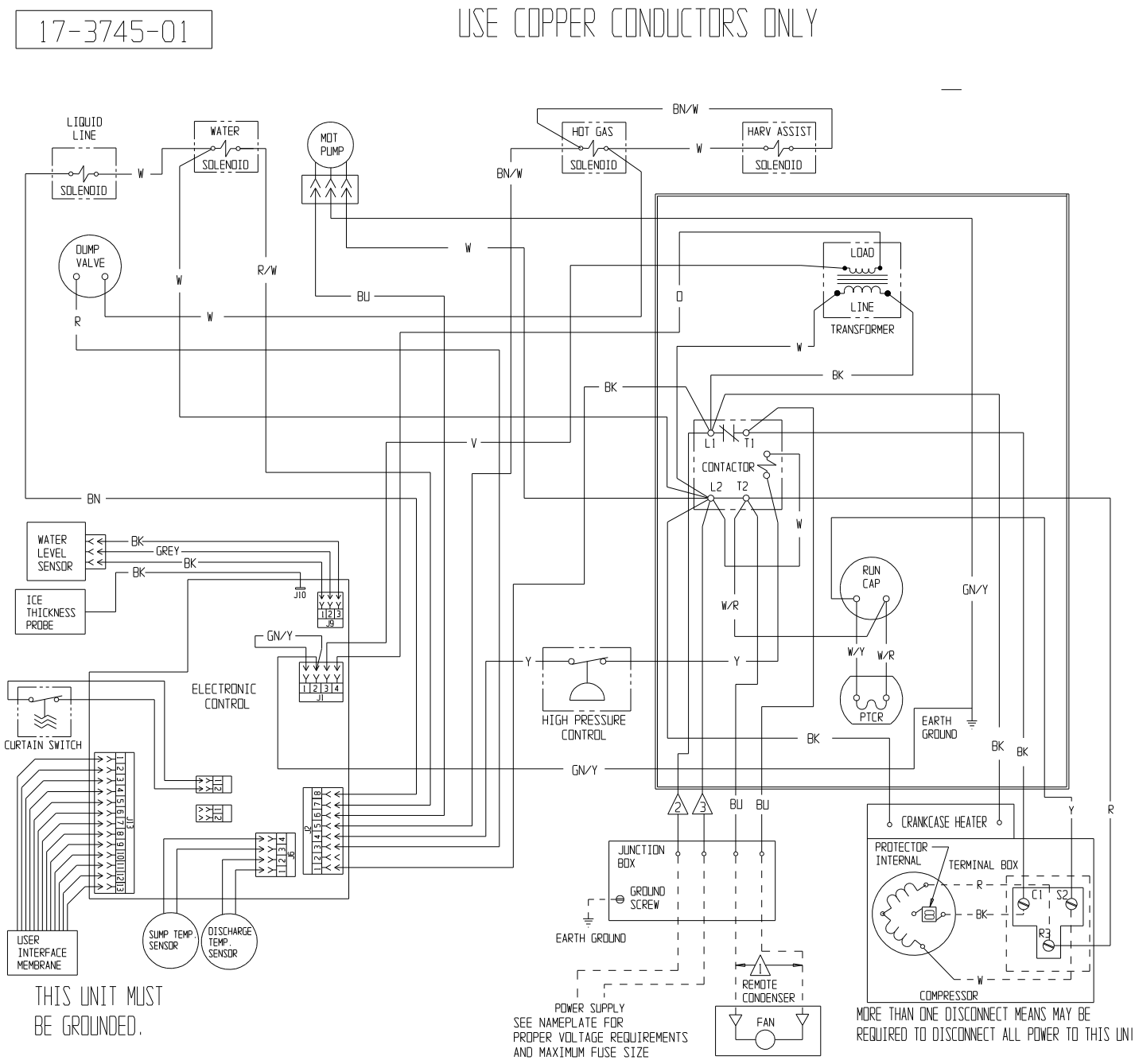

# Schematic Diagram MC0830, MC1030 Remote Single Phase

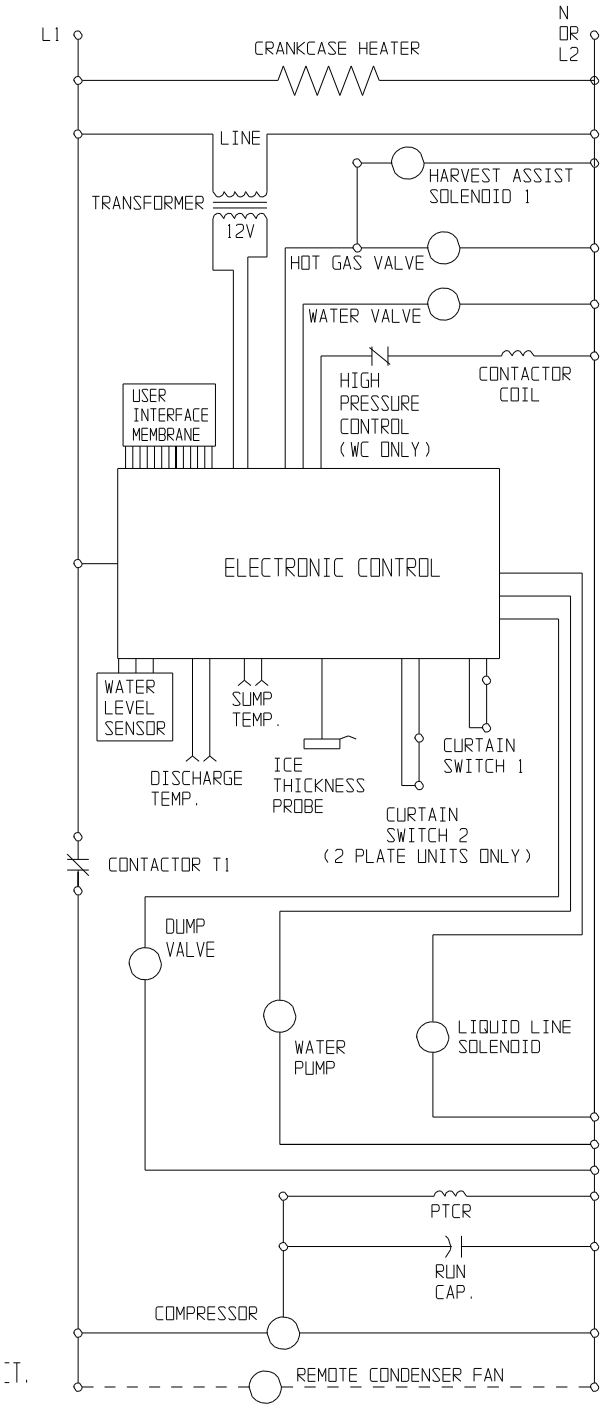

# Wiring Diagram MC2148 Remote Single Phase

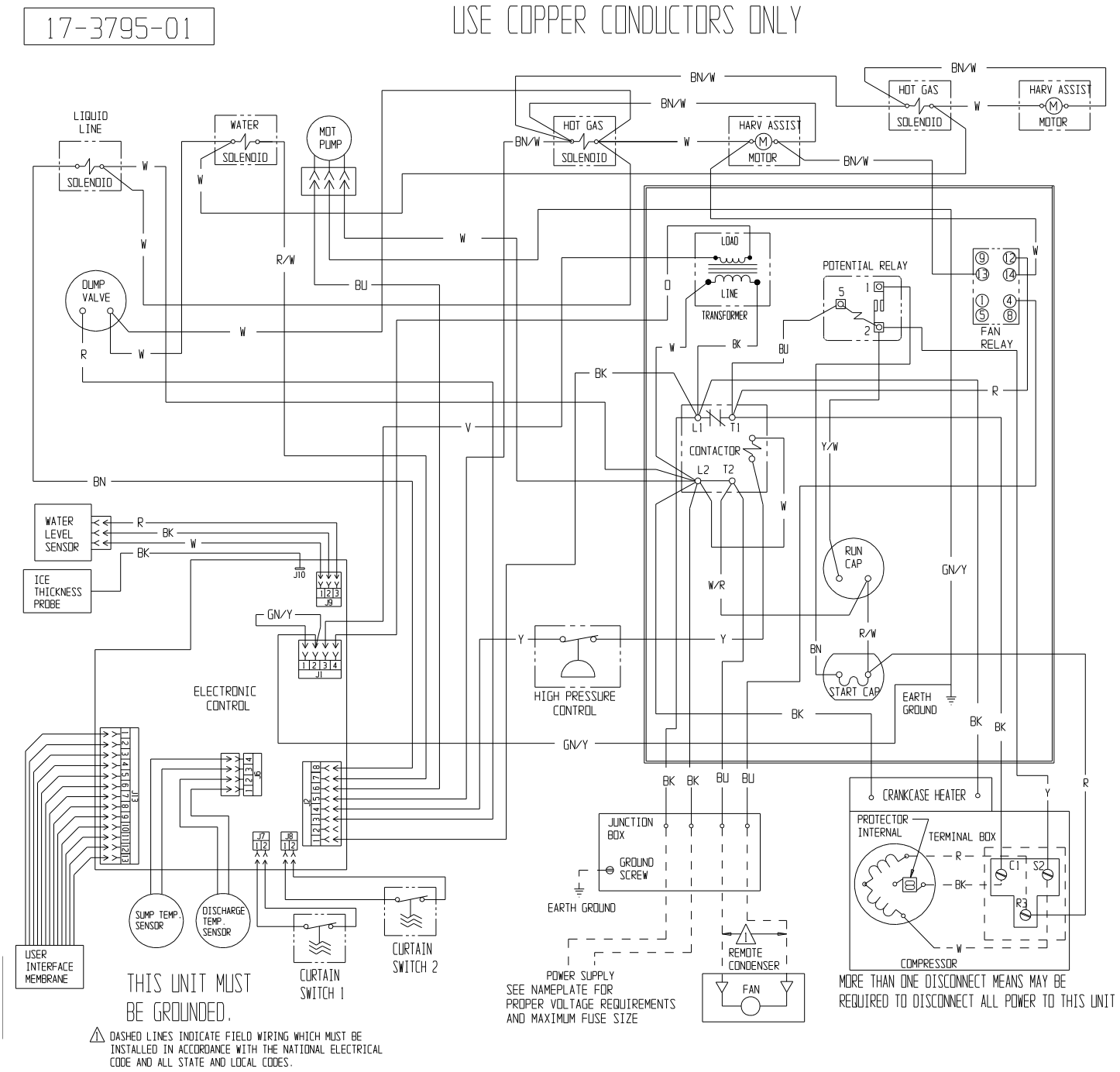

# Schematic Diagram MC2148 Remote Single Phase

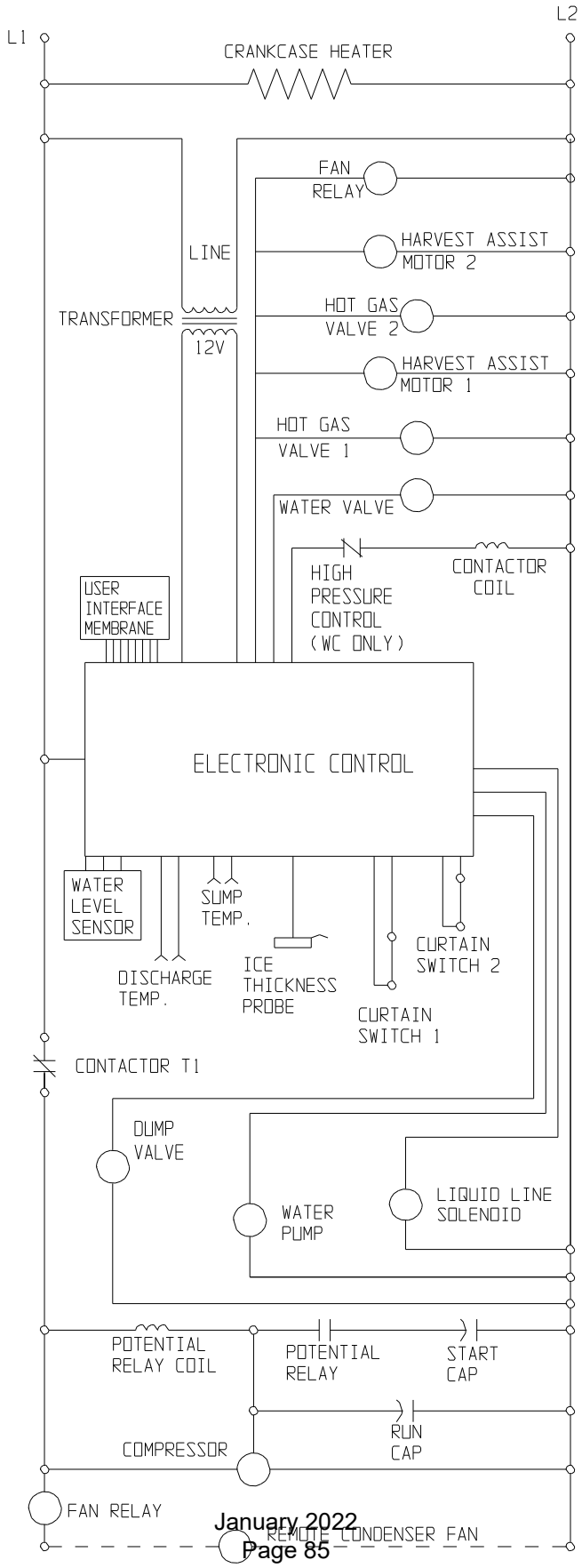

# Wiring Diagram, MC1448 Air Water Single Phase

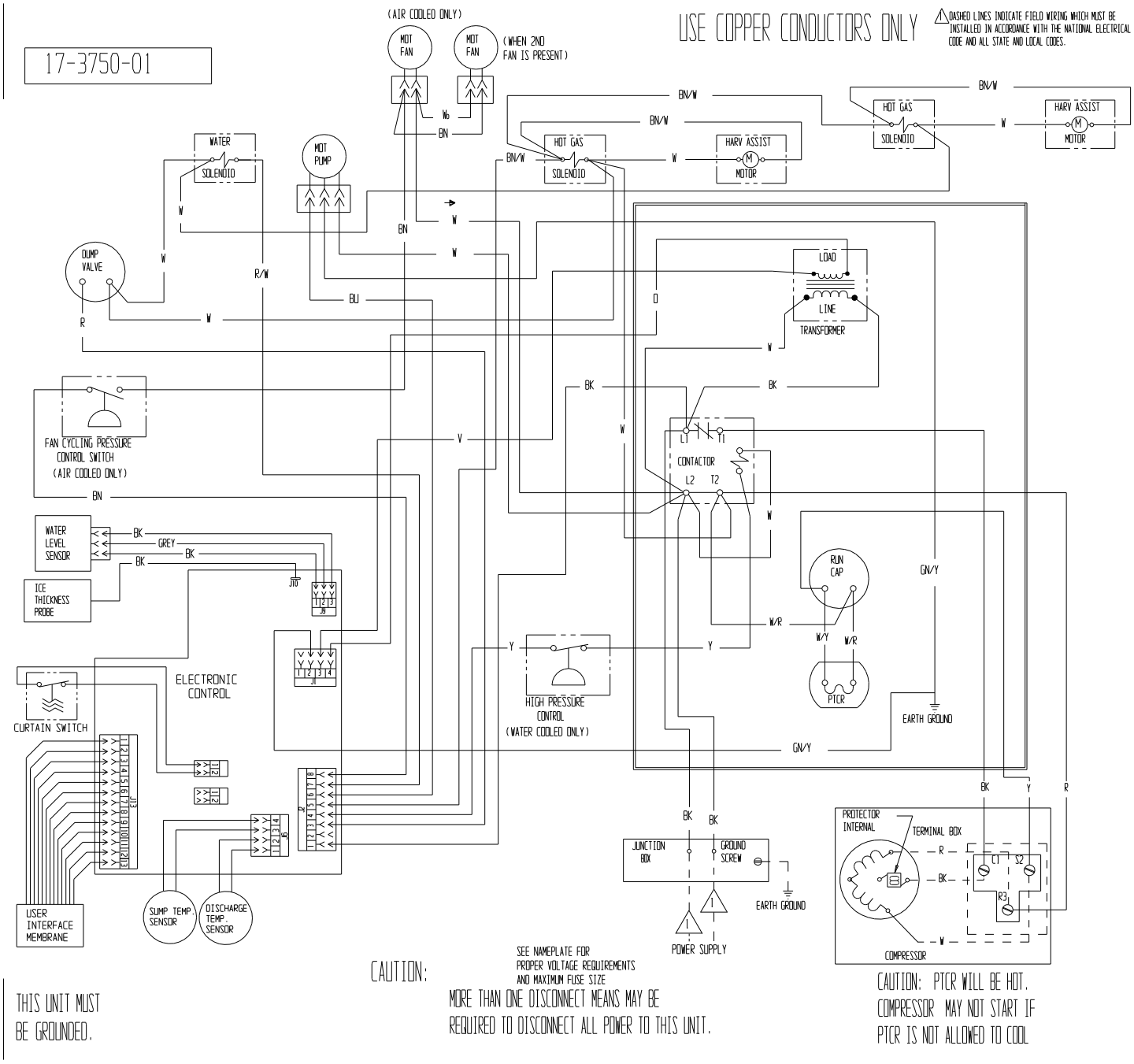

# Schematic Diagram, MC1448 Air Water Single Phase

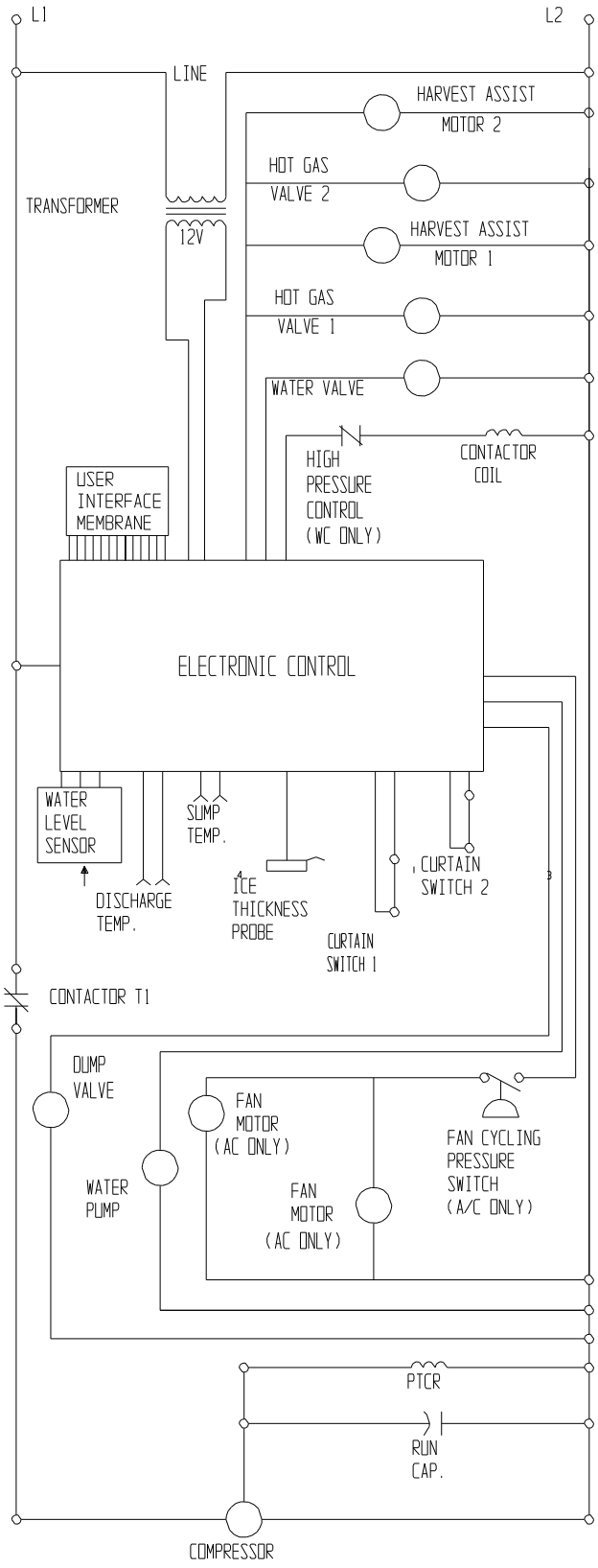

# Wiring Diagram MC1448 Remote Single Phase

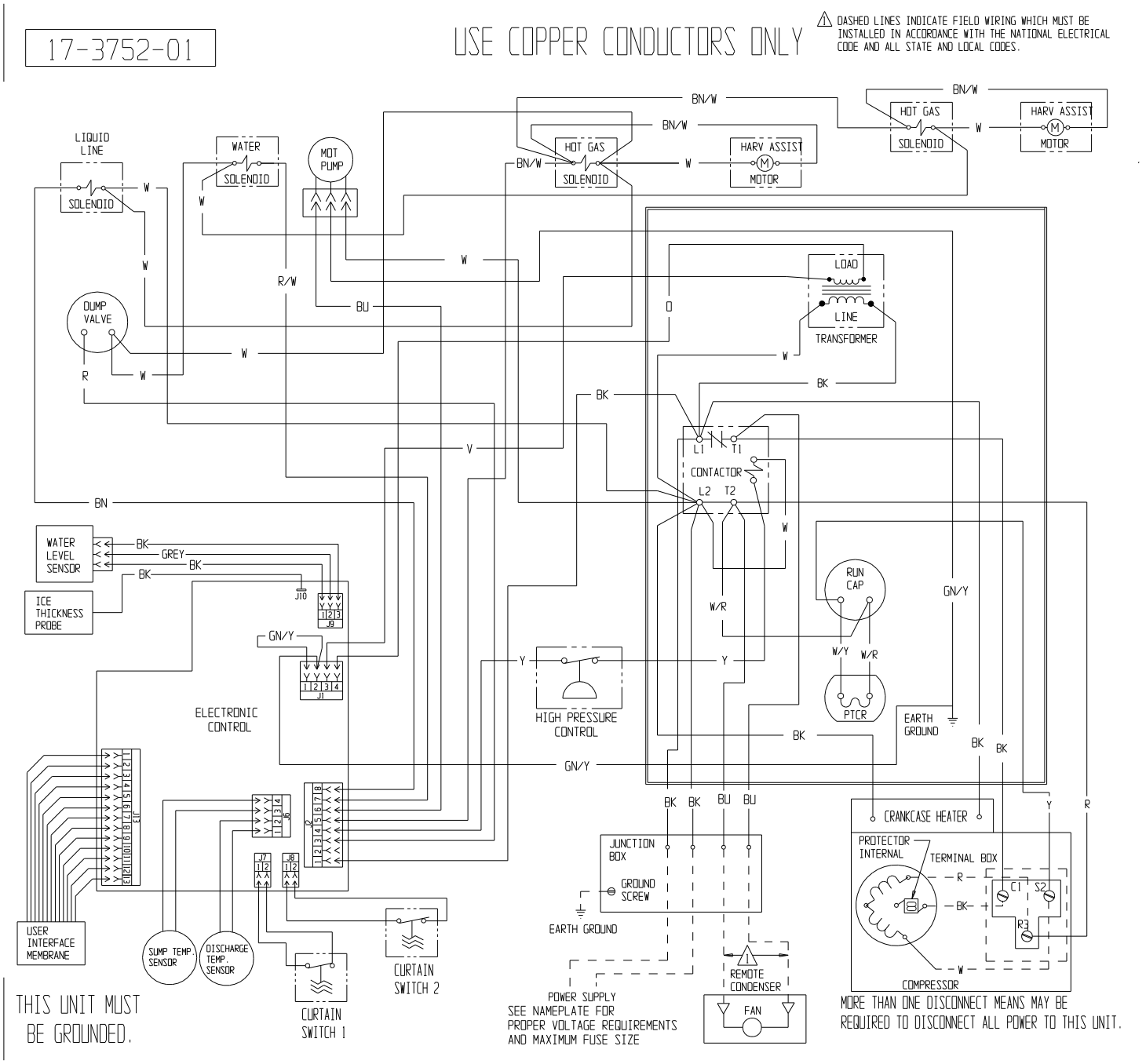

# Schematic Diagram, MC1448 Remote Single Phase

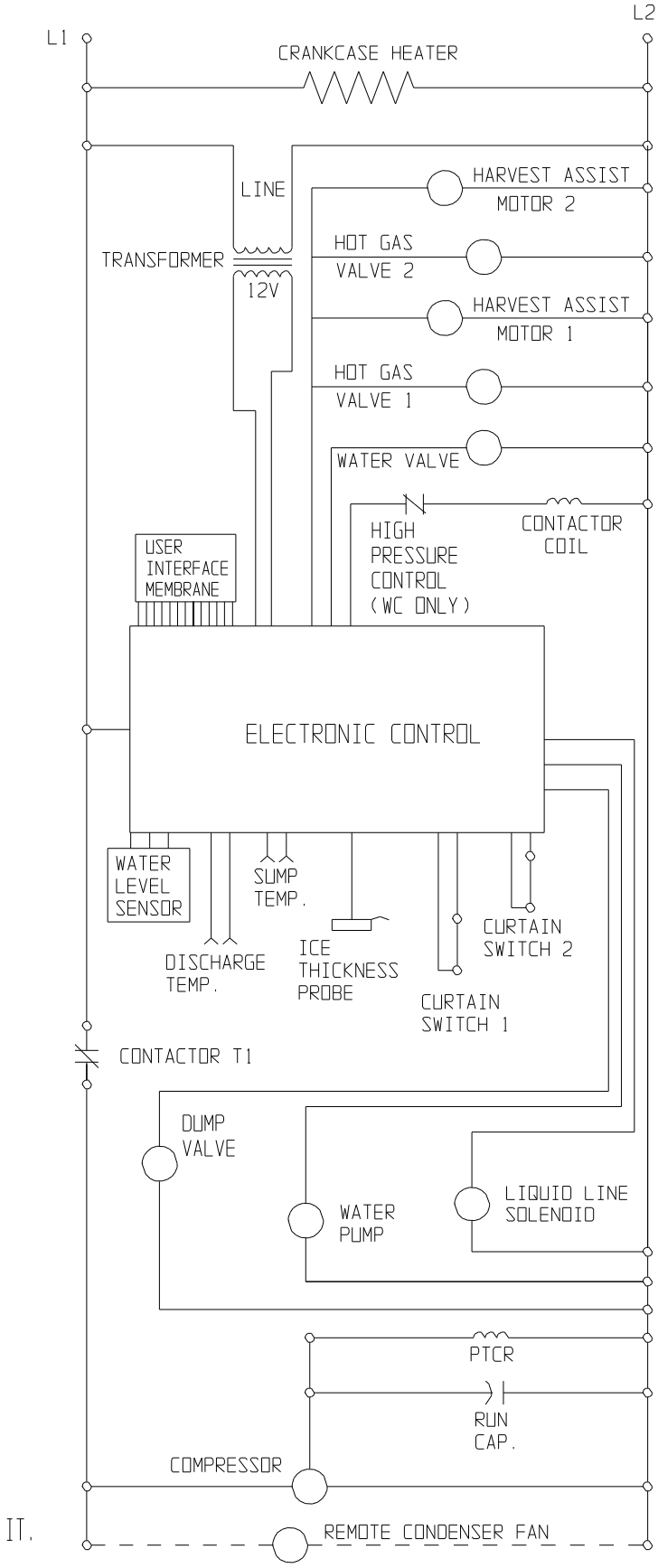

# Wiring Diagram MC1448 Air Water Three Phase

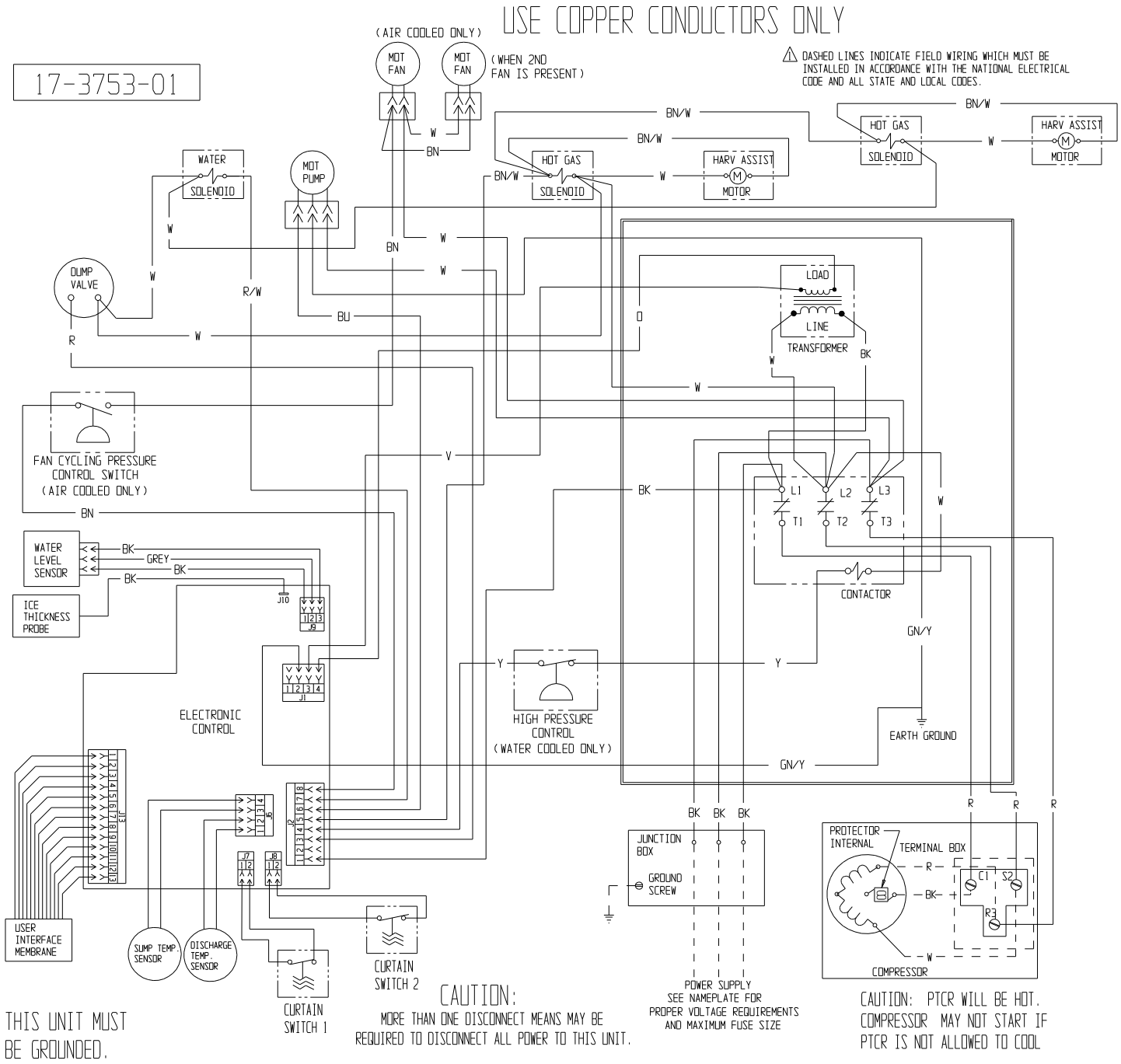

# Schematic Diagram, MC1448 Air Water Three Phase

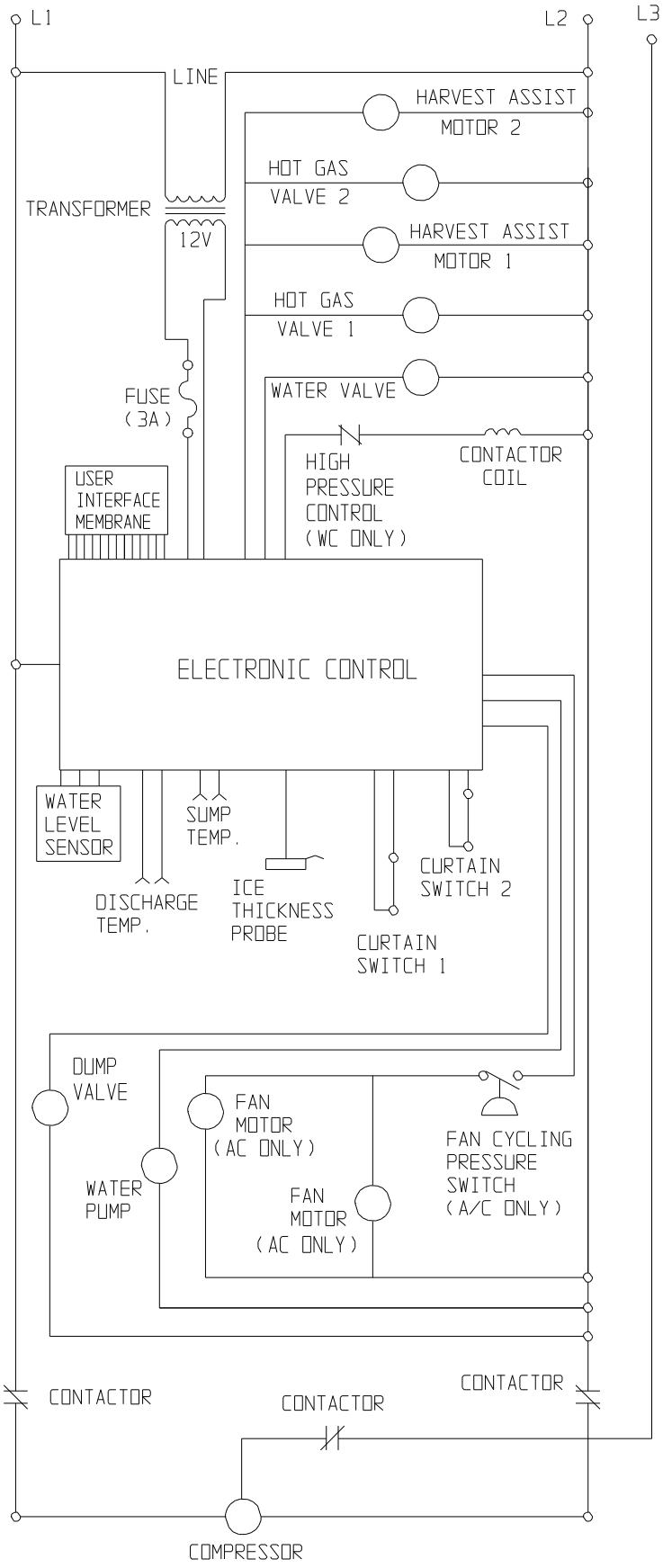

# Wiring Diagram MC1448 Remote Three Phase

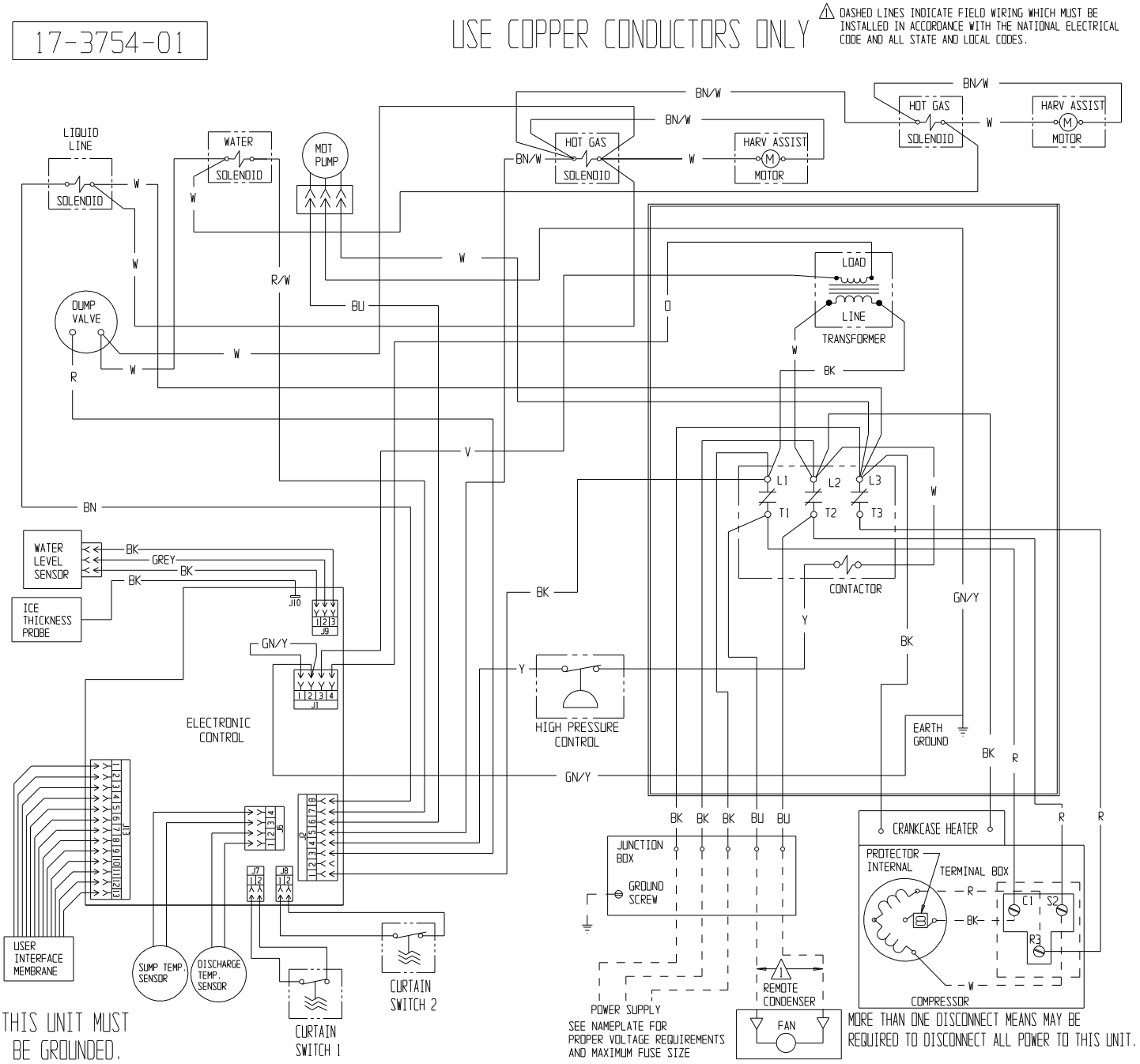

# Schematic Diagram MC1448 Remote Three Phase

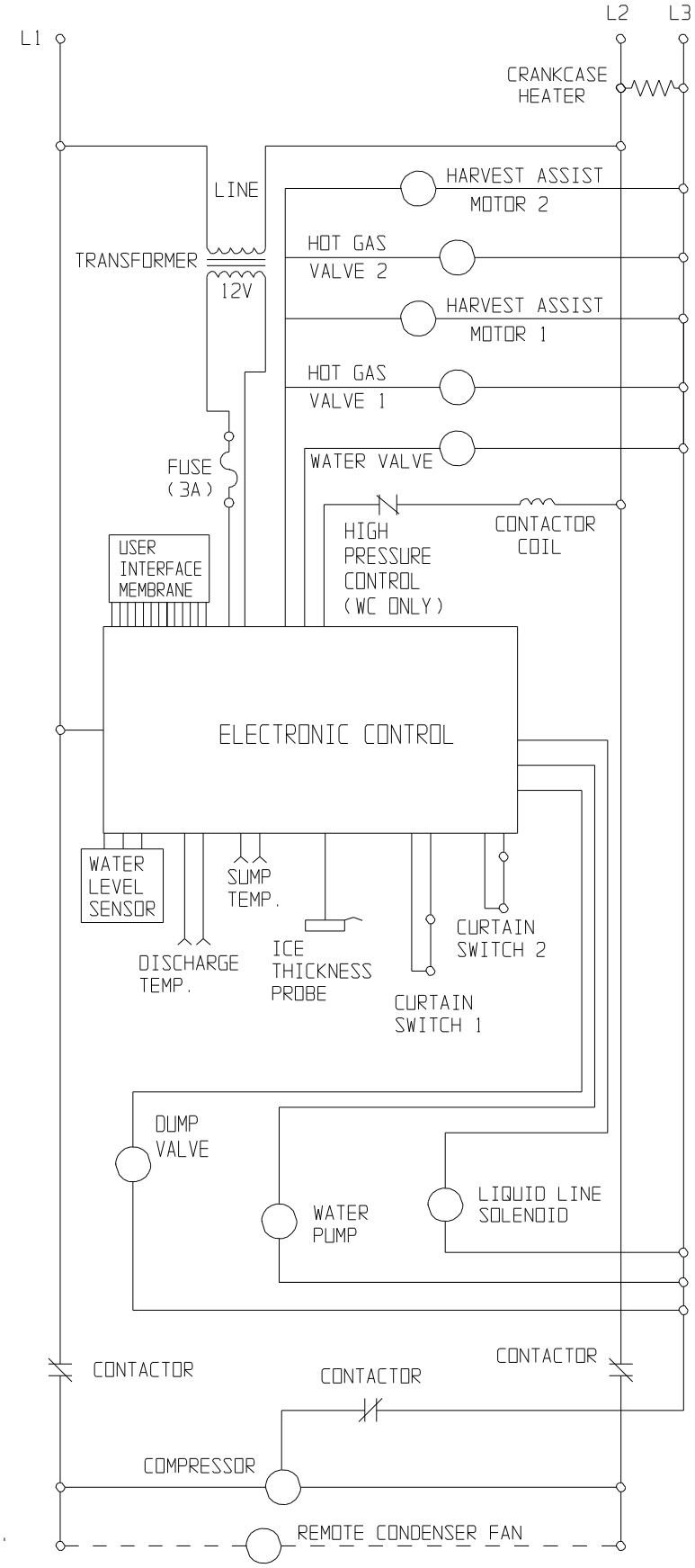

# Wiring Diagram MC330L, MC430L Single Phase

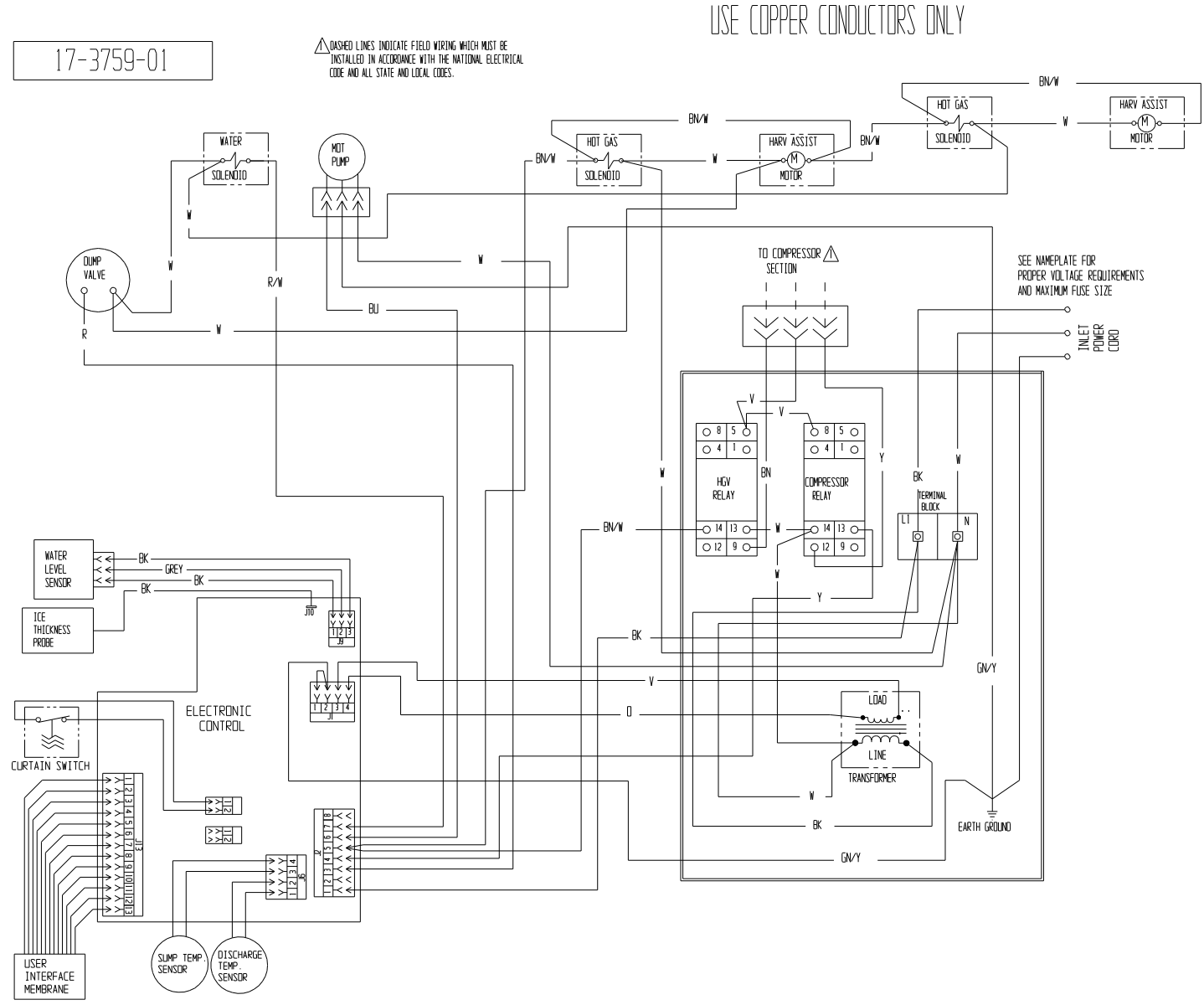


CAUTION:

THIS UNIT MUST BE GROUNDED.

MORE THAN ONE DISCONNECT MEANS MAY BE REQUIRED TO DISCONNECT ALL POWER TO THIS UNIT.

# Schematic Diagram MC330L, MC430L Single Phase

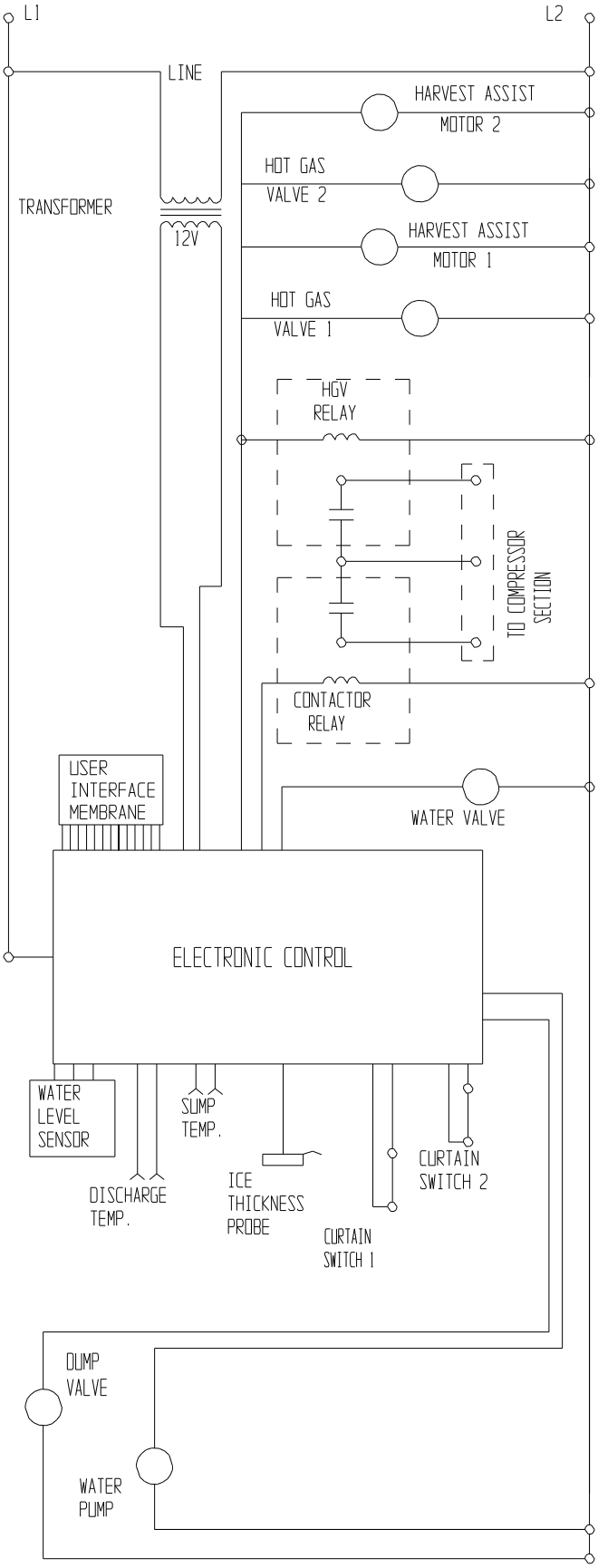

# Wiring Diagram MC222L Single Phase

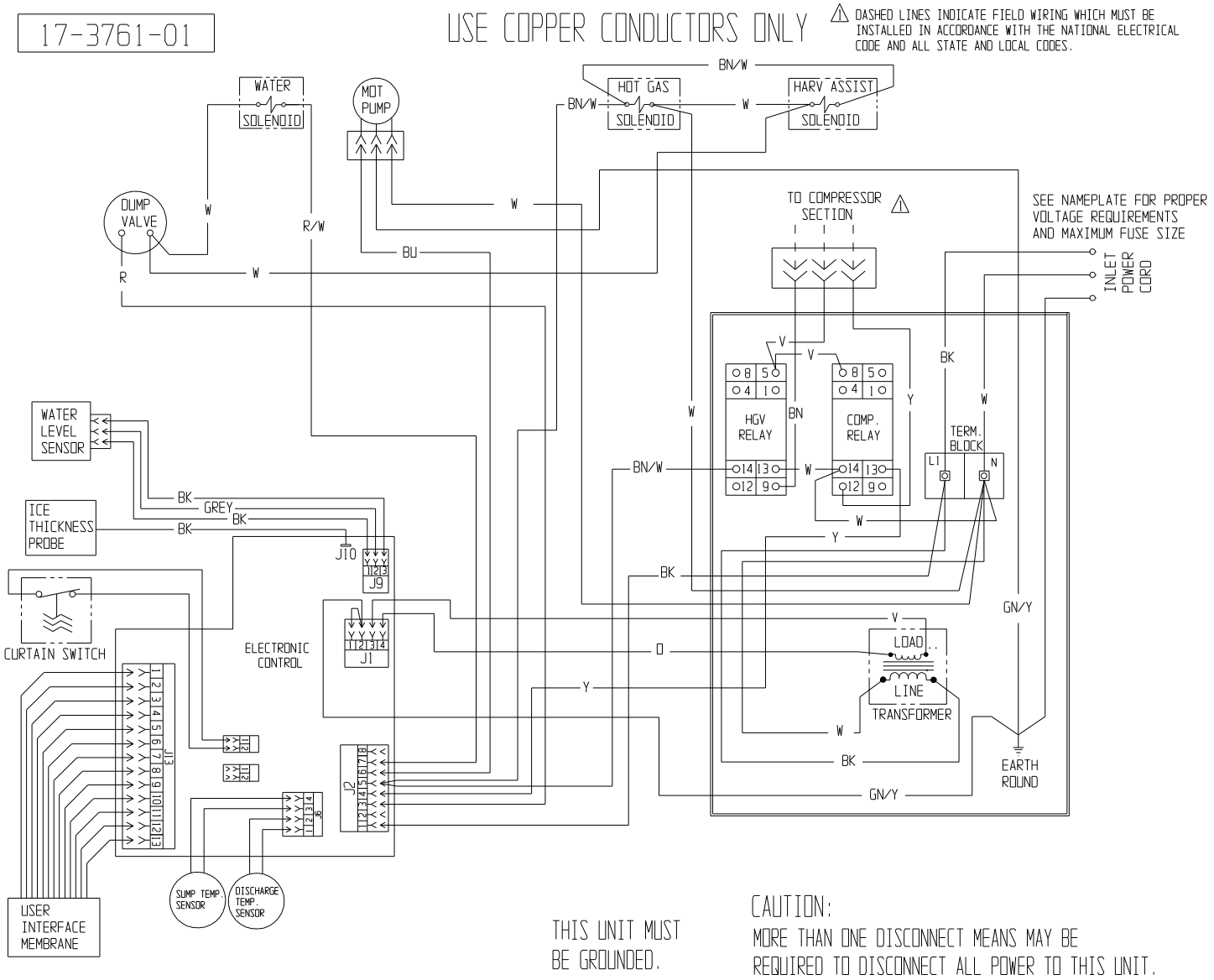

## Schematic Diagram MC222L Single Phase

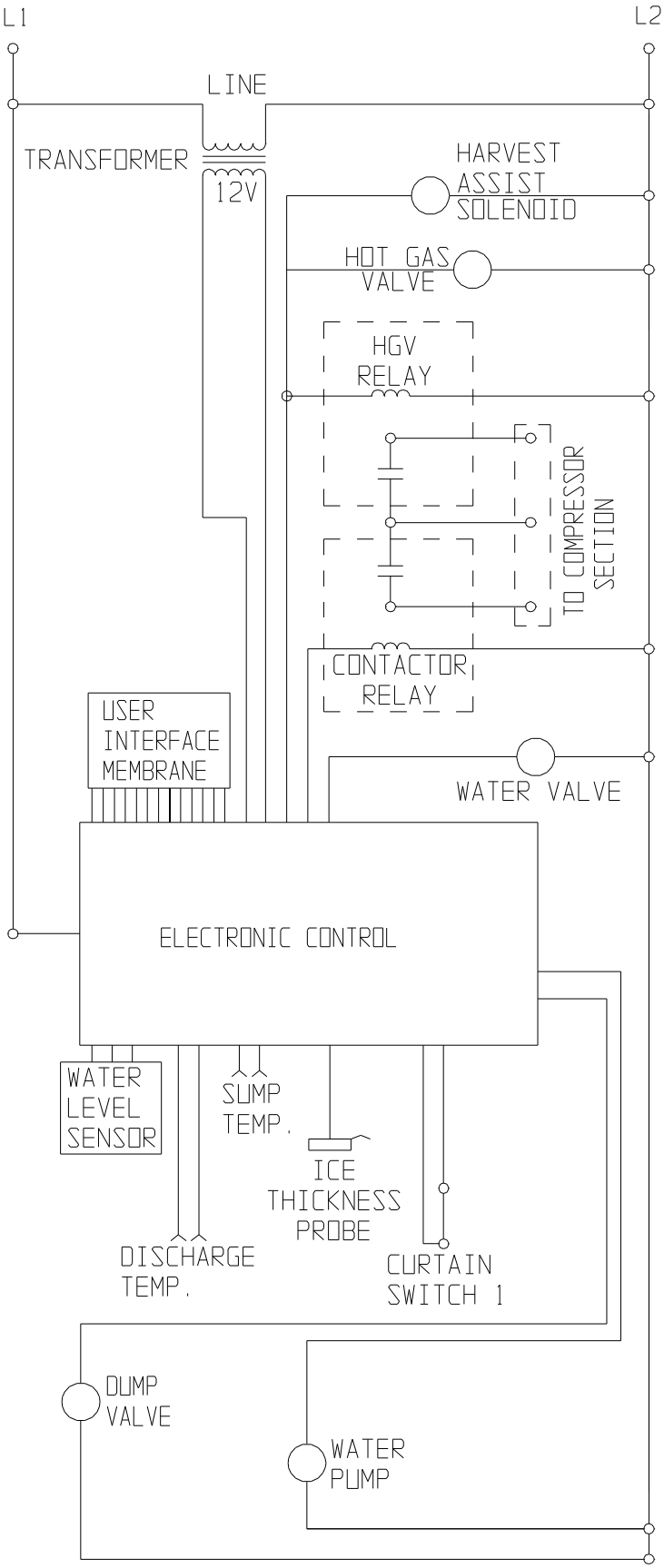

# Wiring Diagram MC2148 Remote Three Phase

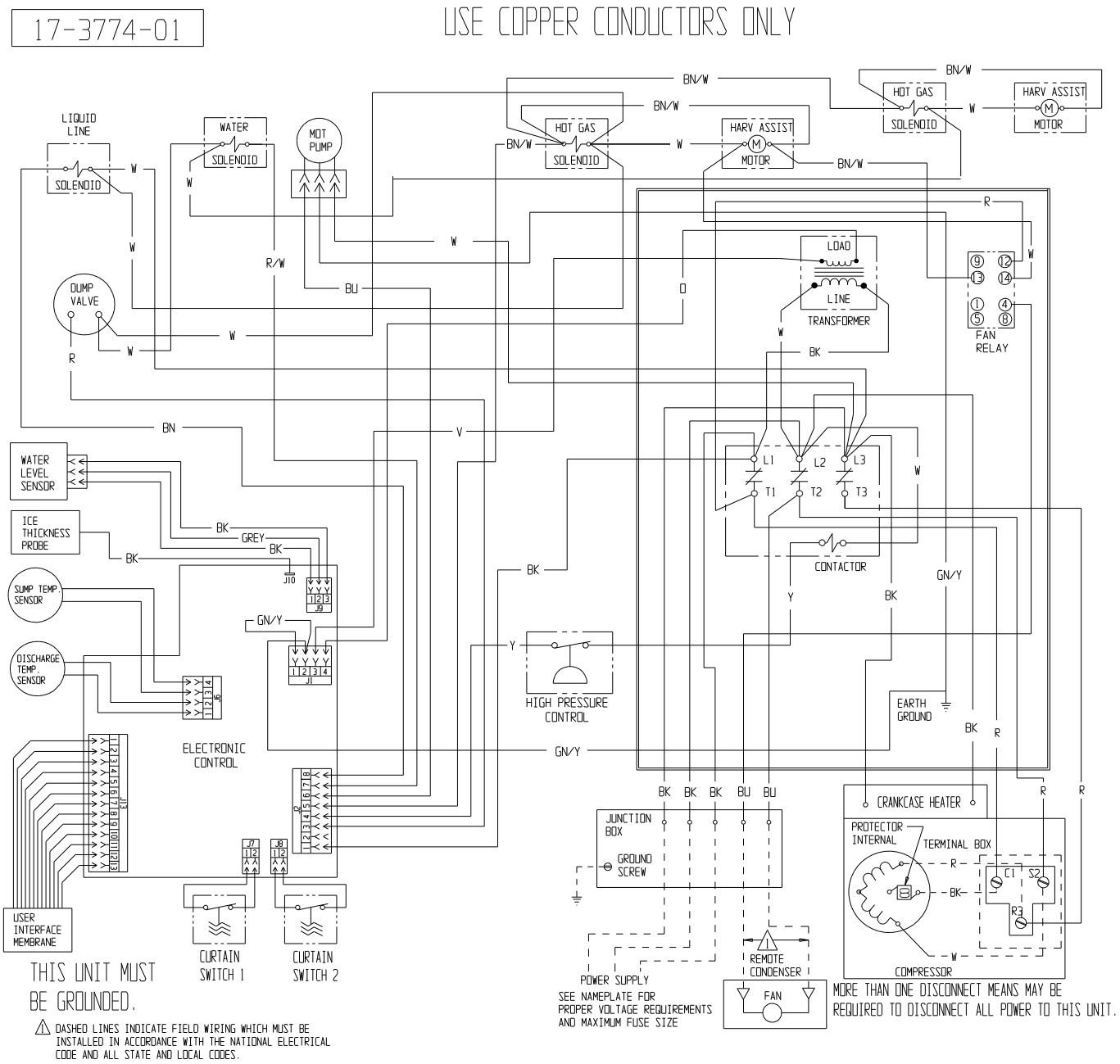

# Schematic Diagram MC2148 Remote Three Phase

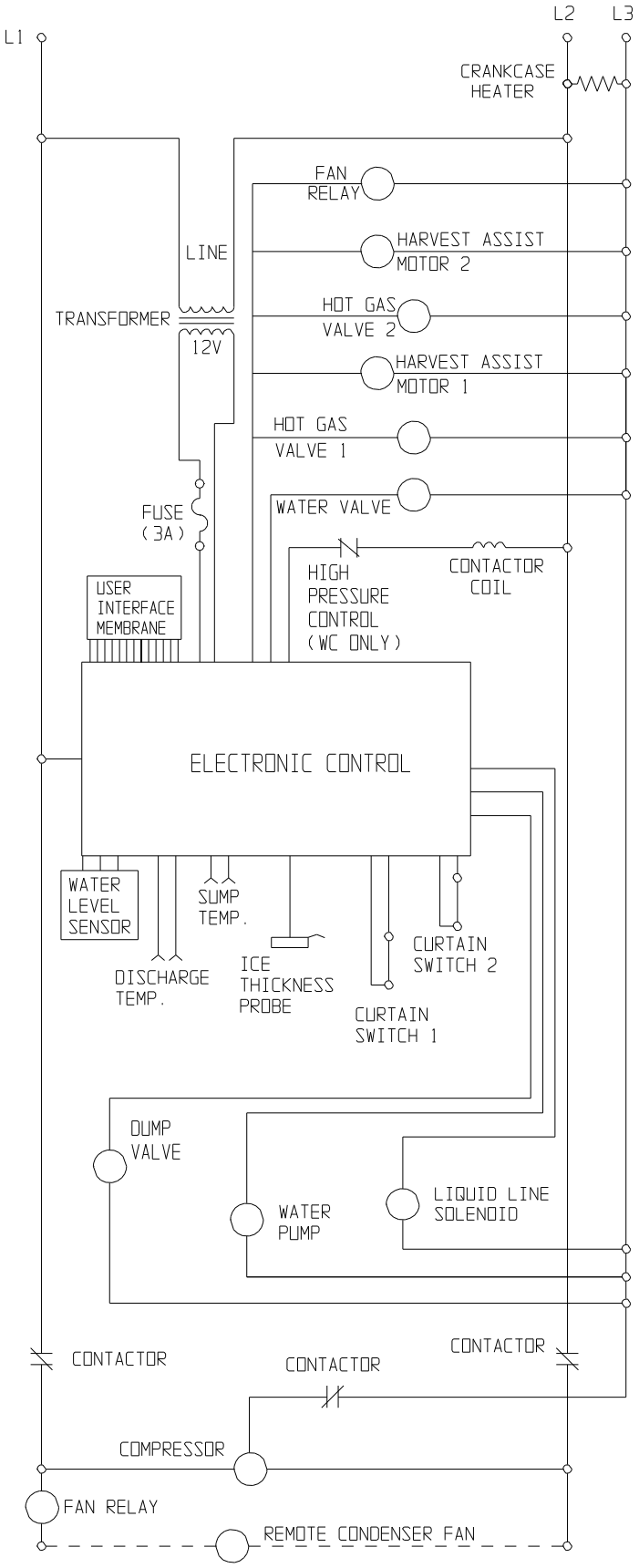

# Wiring Diagram MC2148 Remote Single Phase

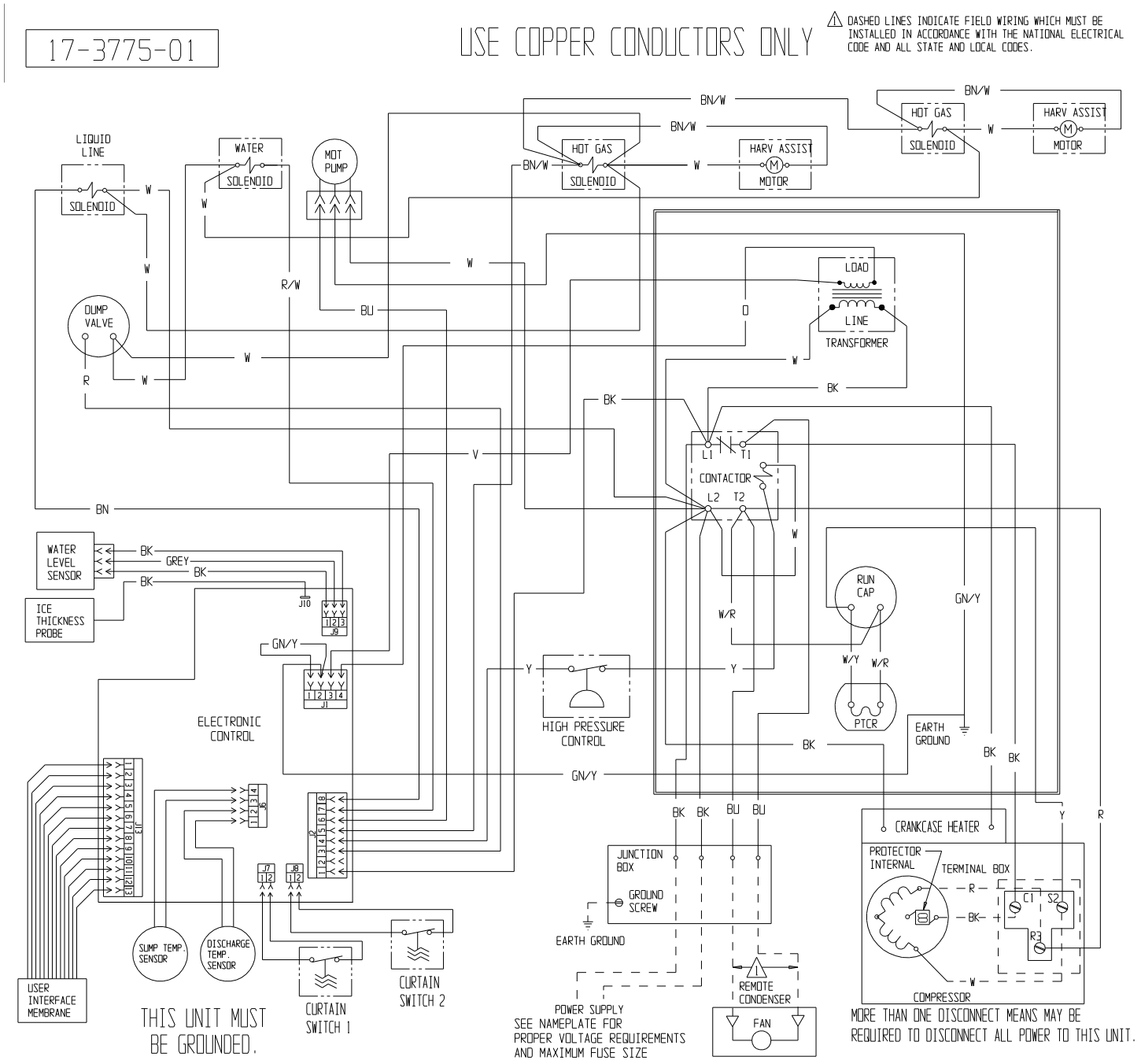

# Schematic Diagram MC2148 Remote Single Phase

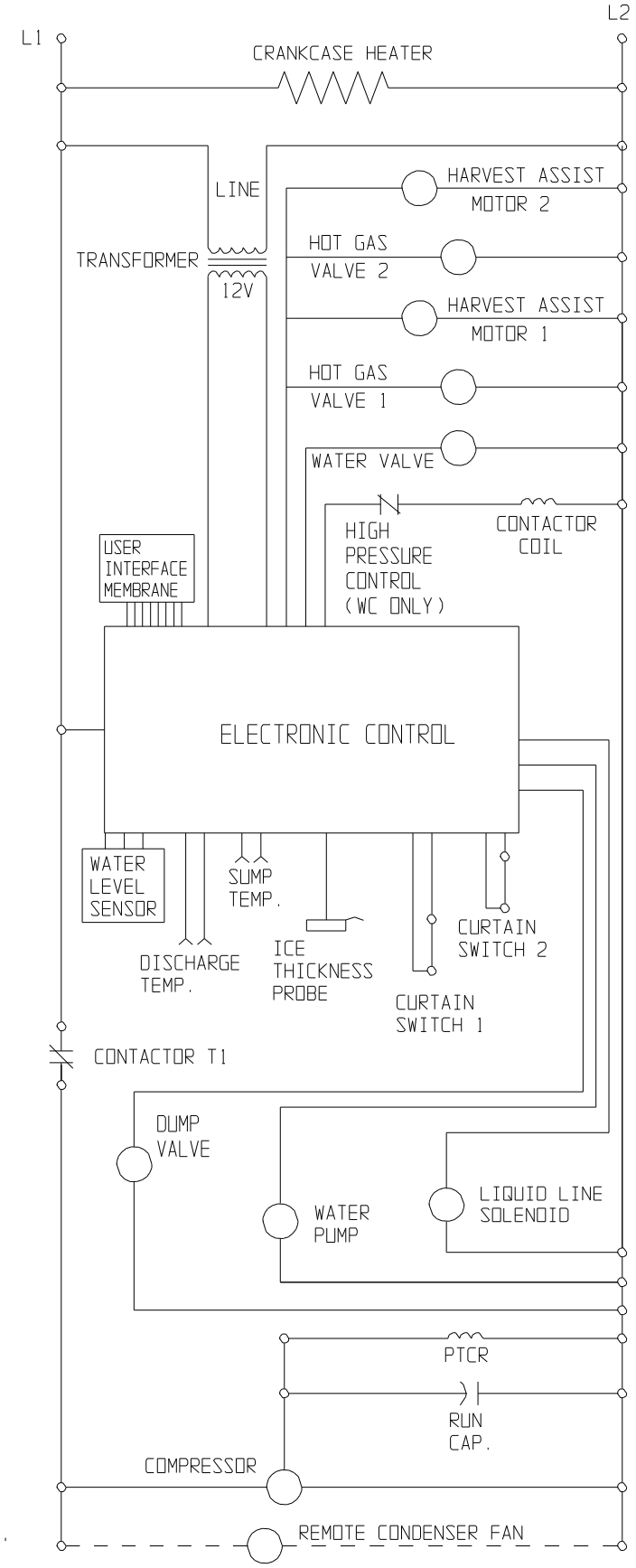

# Wiring Diagram, MC2648 Remote Single Phase

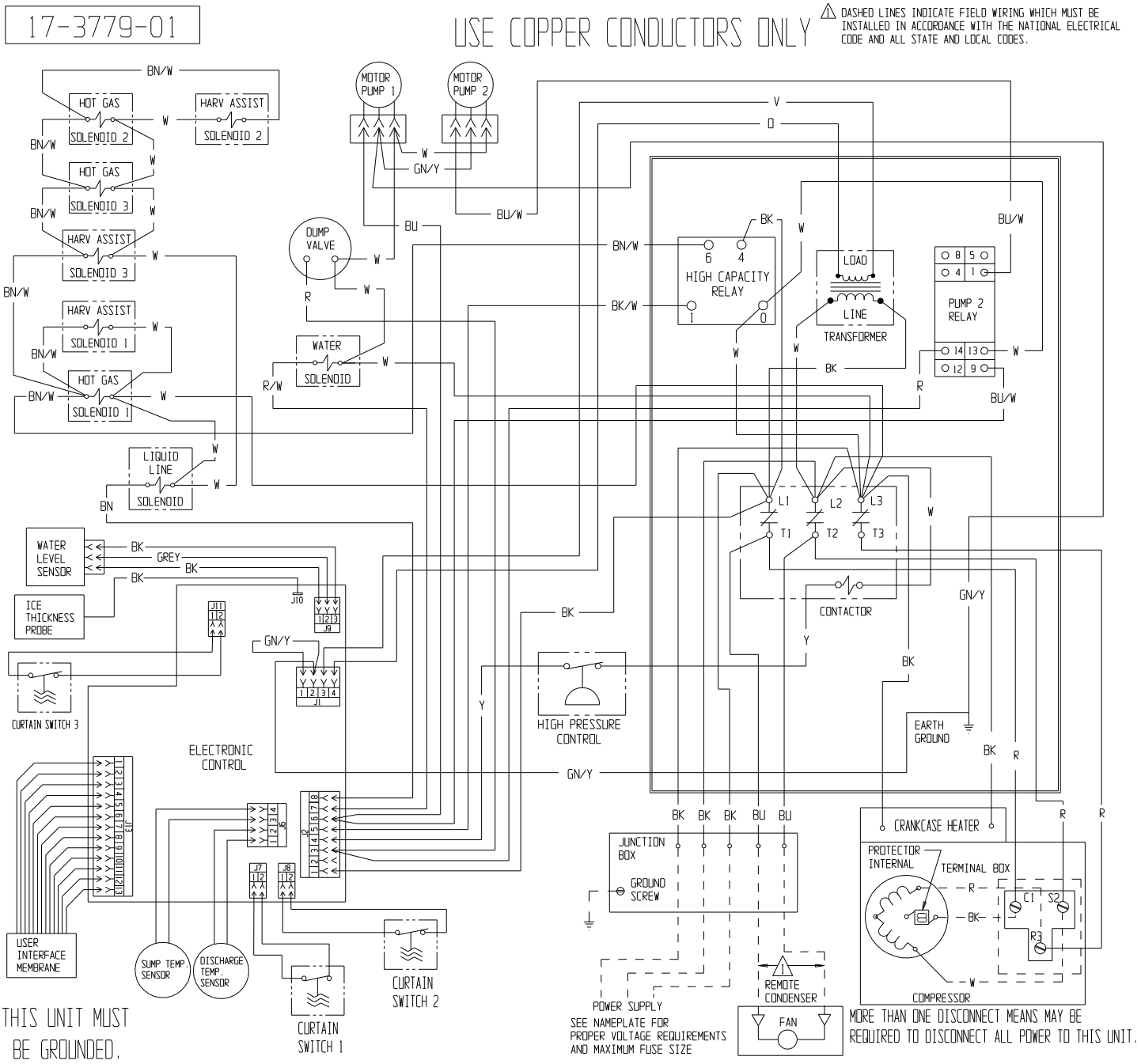

# Schematic Diagram, MC2648 Remote Single Phase

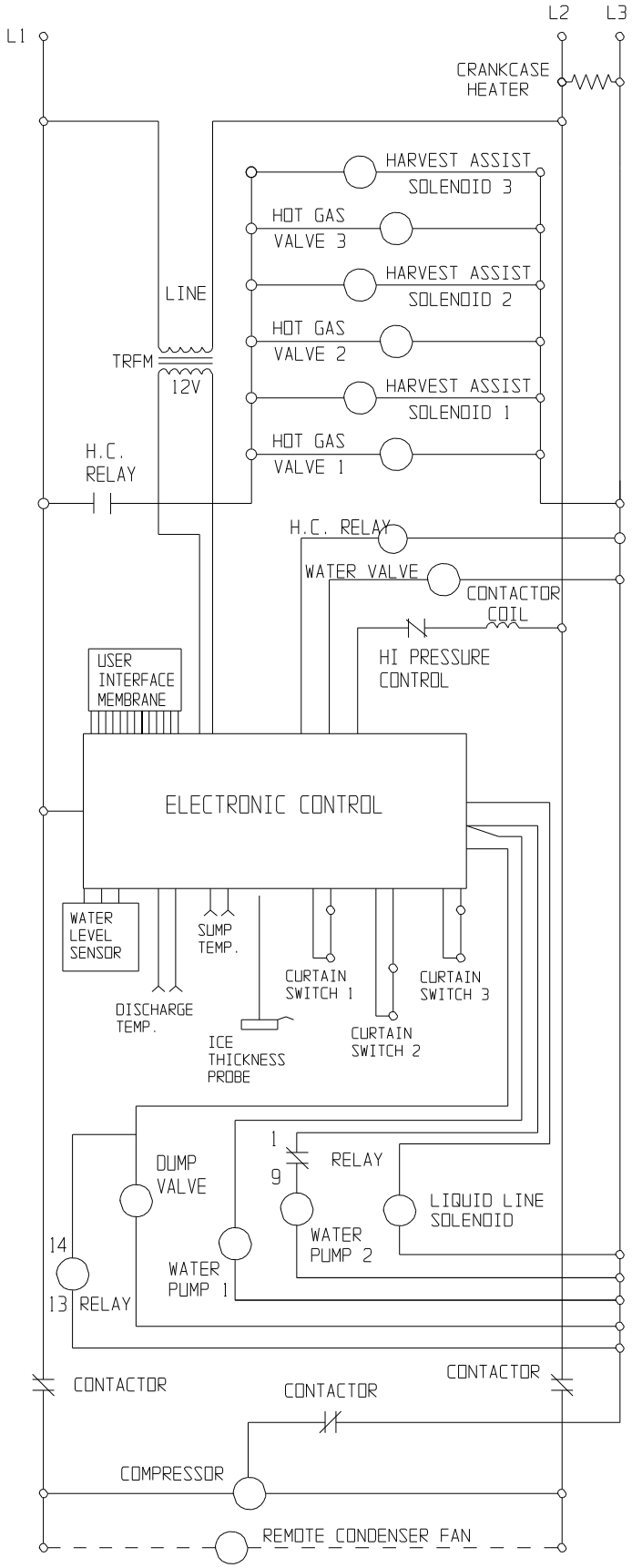

**SCOTSMAN ICE SYSTEMS**
101 Corporate Woods Parkway
Vernon Hills, IL 60061
800-726-8762
www.scotsman-ice.com