www.BakeMax.com

BakeMax BMCB001 Conveyor Baker 14” Pizza Oven Operations Manual

Questions? Parts? Contact Us:

Toll Free: 1-800-565-2253
Email: Info@BakeMax.com
www.BakeMax.com

BakeMax®
www.BakeMax.com

Warning & Safety

PLEASE READ AND FOLLOW INSTRUCTIONS BELOW TO PREVENT INJURY OR DAMAGE TO THE PRODUCT

BakeMax® (a registered trademark of Titan Ventures International Inc or TVI) is not responsible for any harm or injury caused due to any person's improper or negligent use of this equipment. The product shall only be operated by someone over the age of 18, of sound mind, and not under the influence of any drugs or alcohol, who has been trained in the correct operation of this machine, and is wearing authorized, proper safety clothing. This machine is intended for commercial use only. Any modification or miss use to the machine voids any warranty and may cause harm to individuals using the machine or around the machine while in operation.

- When using the machine, please ensure that you have read all the instructions within this manual.
- Be aware of your surroundings when using this machine, ensure there are no children or any other persons who are near the machine before operating.
- Do not put hand near moving parts.
- Remove all obstacles, which may interfere with machine functions.
- Keep work area clean and clear of clutter.
- Do not sit or stand on machine.
- Do not wear loose clothing or jewellery when operating machine as it may get caught in moving parts and cause injury.
- Stop using the machine and have it checked by an authorized service personal if it is not working properly.
- Disconnect from power source before performing and maintenance or cleaning on the machine.
- When the machine is not in use, please clean and store properly,
- Do not place any electrical parts or plug / cord in water or liquid.
- If the supply cord is damaged it must be replaced by an authorized service agent to avoid any electrical hazards.
- Keep power cord away from heat.
- Always ensure to follow local laws when operating your machine.
- Warning: This Item has been coated for shipping purposes, please clean prior to using.

Cleaning

- This unit has been coated for shipping purposes, please clean before use.
- Do not use any liquid pressurised cleaning equipment on this machine.
- Disconnect power supply before cleaning.
- Only use food grade non-abrasive cleaning agents.
- Follow any additional cleaning / maintenance listed below.

Features

The BakeMax Conveyor Baker is great for baking all types of bread, pizza, bagels, cookies and more. Designed to provide consistent heat with top and bottom infrared heaters and variable speed controls. Ideal for restaurants, convenience stores, cafes, and grocery stores.

- Bakes up to sixteen 12” or twelve 14” parbaked pizzas per hour
- Product Entry and Exit Openings are adjustable from 1.5” to 3.25” High.
- Requires only 14.5” of Counter Space and the unit can be placed directly against a wall.
- Body Constructed Completely of Stainless Steel
- Easy-To-Use Control Panel takes the Guess Work out of Temperature and Speed Control Settings
- Fast Start-Up due to its Powerful 3,600-Watt Heat Source
- Quartz Sheathed Infrared Heating Elements provide faster, more consistent heating then traditional heating elements
- Separate Adjustable Top and Bottom Heat Control to adjust for perfect color and texture of Bread, Bagels, English Muffins and more
- Adjustable heat 158˚F – 500˚F (70˚C – 260˚C)
- Touch Safe™: with its burn proof design prevents accidental burns during operation
- Different Menu items can be cooked in the same oven to offer superior flexibility
- Smart Crumb Trays Keeps the Breadcrumbs from Falling Under the Toaster
- 1-Year Limited Warranty

Technical Specifications:

- Electrical: 240V / 15.7A / 3600W / 60Hz / Nema 6-20P*.
- Dimensions (No catch tray: WDH): 18.75” x 30” x 15.5”.
- Dimensions (One catch tray: WDH): 18.75” x 40.5” x 15.5”.
- Dimensions (Both catch tray’s: WDH): 18.75” x 47” x 15.5”.
- Net weight: 60 lbs.

Shipping Specifications:

- Packaging Dimensions (WDH): 38” x 28” x 20”
- Weight: 66 lbs.

www.BakeMax.com

Operating Instructions:

- Turn the power to FULL POWER and turn conveyor speed control to maximum setting.
- Allow preheat time 8-10 min. for unit to heat up.
- Place a sample product on the conveyor belt to test the settings.
- If toasting is too light, turn conveyor speed control counterclockwise to a slower speed.
- If toasting is too dark, turn conveyor control clockwise to a faster speed.

Temperature Settings

Dial Setting	Temperature
1	158-194˚F (70-90˚C)
2	194-230˚F (90-110˚C)
3	266-284˚F (130-140˚C)
4	284-311˚F (140-155˚C)
5	311-356˚F (155-180˚C)
6	365-401˚F (185-205˚C)
7	401-428˚F (205-220˚C)
8	464-500˚F (240-260˚C)
9	482-500˚F (250-260˚C)
10	482-500˚F (250-260˚C)

Baking Settings

Product	Top Heat	Bottom Heat
Pizza 12” Parbaked	300F	400F
Meat & Cheese Sandwich	450F	300F
Meatball	500F	350F
Bagel (open)	500F	400F
1 oz Cookies	200F	250F
Garlic Bread (Lightly Seasoned)	500F	500F
Fish Sizzle Platter	400F	500F

**Above settings are guidelines only; product portions and temperatures can cause variations

www.BakeMax.com

General Maintenance & Cleaning

1. Daily maintenance should be carried out with all power to the unit in the off position, and the electrical cord unplugged. Cleaning should be carried out by means of food grade cleaning solutions via a soft or damp cloth. Do not utilize any type of pressurized water equipment.

2. Do not use any acidic agents and make sure that no water enters the device.

3. Clean the water pan regularly. Calcification in the water pan may be removed with common cleaning agents or liquids. (Ensure pan is removed from unit before cleaning)

4. After the cleaning procedure, you should use a soft and dry cloth to dry and polish the surface.

5. Make sure the device has been cleaned properly before storing it in a dry place.

6. Regular inspection on the outside and internal cabinet along with the power cord should be observed and carried out on a regular basis to isolate and or observe any unforeseen failure or safety concern.

Daily Cleaning

1. Turn main power switch to the OFF position, disconnect unit from power source and allow unit to cool.

Note: **DO NOT ATTEMPT TO CLEAN THE GLASS TUBE HEATING ELEMENTS**

2. Using a mild detergent and warm water, wipe exterior surfaces, clean with a damp cloth.
   - For lightly soiled build-up, clean with a damp cloth.
   - For heavily soiled build-up, use a soft damp cloth and mild detergent. **DO NOT USE CORROSIVE CLEANERS.**
   - Rinse thoroughly and allow to dry.

3. Remove the load and unload tray by lifting it out of position. Clean using mild detergent and warm water. Rinse thoroughly and allow to dry.

4. Remove each crumb tray by sliding each of them out from under the conveyor belt. Clean crumb tray by wiping with a damp cloth and mild detergent, then rinse thoroughly and dry. **DO NOT** use corrosive cleaners. Place trays in place prior to putting unit back into operating.

5. Reconnect power.

Warning: When placing the tray back into position; be sure that the message "**CAUTION HOT SURFACE"** is the right side up.

www.BakeMax.com

Weekly Cleaning of the Conveyor Belt

1. Turn power switch to the OFF position. Disconnection unit from power source and allow the unit to fully cool down before continuing.

2. Perform daily cleaning procedures.

3. Use a damp cloth to wipe the fan guard located on the box cover under the unit. Ensure the unit is fully dry before you reconnect power or turn power back on.

4. Switch the ON/OFF switch to the ON position and turn conveyor to its fastest setting (Make sure the heater is off).

5. With the conveyor turned on and the crumb tray in place, take a wire grill brush or dry abrasive pad, clean the exposed surface of conveyor belt by passing the brush or pad, back and forth across the surface of the conveyor belt as the belt moves past (See Figure **A** below). Continue until the entire belt is clean. Make sure the crumb tray is installed; this will minimize the number of particles that fall into the oven.

6. When the conveyor belt is clean, take a damp cloth and wipe the conveyor, removing any loose particles on the belt surface.

7. Remove the crumb tray by sliding it out from beneath the conveyor belt. Clean the crumb tray by wiping with a damp cloth and mild detergent. • **Do not use corrosive cleaners**. • **Do not run conveyor oven without crumb trays installed**. • **Overheating to electrical components and premature failure can occur. • Do not immerse or let the unit stand in water. • Do not hose down the unit or the table/counter if the unit is on the table/counter. • Keep away from running water.**

Figure "A"

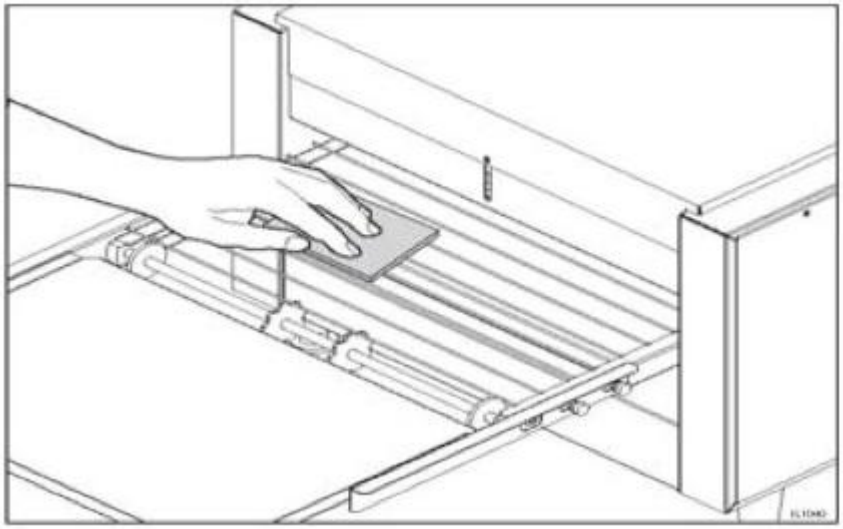

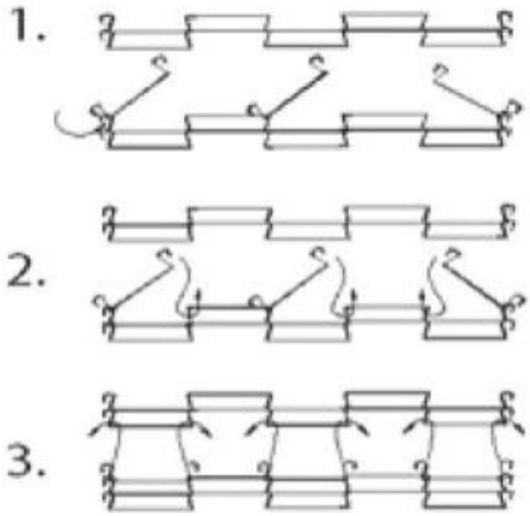

Figure "B" Master Links Removal & Installation

Monthly Cleaning & Removal of Belt

1. Turn main power switch to the OFF position. Disconnect unit from its power source and allow unit to fully cool.

2. Perform daily and weekly cleaning procedures. Follow the step 1 in Figure “B”, to remove all the master links. To remove, unhook each end of one link and bring the two ends together, and un-thread. Once detached, re-hook onto itself so not to get damaged.

3. Now that the links have been unhooked, the conveyor can now be carefully removed from the oven. Standing at one end of the oven, starting with the end on the bottom, roll the conveyor belt until it has been totally removed. Take careful notice being sure not to damage the heater tubes, and working it over the drive sprockets, (see Figure “C” Below).

4. Clean conveyor belt in deep sink, caustic cleaners may be used. For a heavy soiled conveyor belt, soak overnight in hot soapy water.

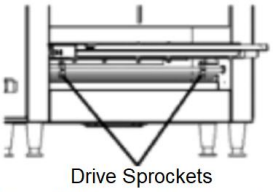

Figure "C" Conveyor Drive Sprockets

Warning: Do NOT attempt to clean the heater tubes.

5. Take this opportunity to clean and remove any loose materials inside the unit. Using a mild cleaner and damp cloth, carefully wipe the inside surfaces being sure NOT to clean the heater tubes. **WARNING: DAMAGE CAN OCCUR TO THE HEATER TUBES FROM IMPROPER CLEANING. DO NOT SPRAY CLEANING SOLUTIONS INTO OVEN CAVITY.**

6. Reinstall conveyor belt by first laying the belt along the bottom of the oven cavity making sure the hooks on the sides are facing the inside and ends of the hooks will be pointing away from the direction of the belt so not to catch on any internal components once put back into operating. Also, being sure to properly align the belt over the conveyor drive sprockets shown in Figure “C” Above. PLEASE NOTE: The direction of the belt.

7. Next, pull one end of the conveyor belt over the top of the sprockets, (being sure to line the links up properly with the sprockets) bring the two ends together.

8. Reinstall the previously removed master links as shown in step 2 & 3 in Figure “B” (Above) Unhook the last link of the conveyor, farthest away from you, and re-thread through the other end, and reconnect back onto itself.

9. Examine the oven to assure proper installation, once satisfied, install crumb trays if you have not done so.

*****DO NOT OPERATE UNIT WITHOUT CRUMB TRAYS INSTALLED.*****

10. Reconnect oven to power supply and check for proper operation.

Replacing the Glass Tube Elements

Step 1. DISCONNECT POWER SOURCE.

Step 2. Remove the top cover panel. By removing the truss head screws. Pull the top cover panel out slightly.

Step 3. Remove each heater tube wires which are requiring replacement from its terminal block connection. One
tube at a time.

Step 4. Remove heater tube retainer by removing retainer screws with washer.

Step 5. Gently, pull defective heater tube out of unit.

Step 6. Gently, put new heater tube into unit.

Step 7. Replace heater tube retainers.

Step 8. Reconnect the heater tube wires to the terminal block.

Step 9. Install top cover panel.

Step 10. Connect unit to power source and test unit for proper operation.

Replacing the Fan Motor

Step 1. DISCONNECT POWER SOURCE.

Step 2. After unit has cooled, remove the crumb tray, and turn unit over so this bottom is facing upward. Never place unit on its side.

Step 3. Unplug power supply cord from fan motor.

Step 4. Remove screws which hold fan motor and grill to the control box cover and remove fan.

Step 5. Once removed, clean fan grill and control box cover using warm soapy water.

Step 6. Put replacement motor and grill in place and secure to control box cover with screws previously removed.

Step 7. Reconnect power supply cord to fan motor.

Step 8. Replace back panel and enclosure.

Step 9. Connect unit to power source, reinstall the crumb tray and test unit for proper operation.

www.BakeMax.com

Replacing Belt Drive Motor

Step 1. DISCONNECT POWER SOURCE.

Step 2. After unit has cooled, remove the crumb tray, and turn unit over so the bottom is facing upward. Never place unit on its side.

Step 3**.** Remove the control box cover which contains the fan motor.

Step 4. Remove the cover that will expose the drive chain and sprockets.

Step 5. Remove the sprockets from motor shaft, using an Allen wrench and loosening the setscrew.

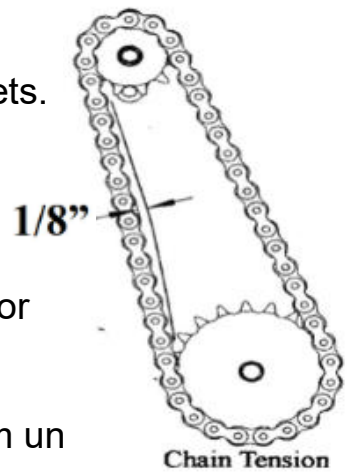

Step 6. Remove the wire from terminal block connecting the drive motor to the internal wiring.

Step 7. Remove screws holding motor in place and remove motor from un

Step 8. Put new motor in place and attach loosely with mounting screws.

Step 9. Replace sprocket on motor shaft. PEASE NOTE: The two sprockets must line up flush with each other, so the chain does not twist any during operating. Also, the hub gets installed closest to the motor.

Step 10. Slide motor unit the drive chain has about 1/4” slack when lightly pushed at the center of its top open run. (See chain tensioning illustration below.)

Step 11. Tighten screw to secure motor.

Step 12. Rewire leads.

Step 13. At this time, you may plug unit in and test for proper operation prior to reinstalling panel and turning unit back over onto its feet.

Step 14. If unit is working correctly, turn unit off and unplug unit completed.

Step 15. Reinstall side panels and control box cover. Place unit back into its upright position. Reinstall the crumb tray.

Step 16. Connect unit to power source and test unit for proper operation.

www.BakeMax.com

Cleaning Air Intake – Weekly

Step 1. DISCONNECT POWER SOURCE.

Step 2. Place unit upside down. NOTE: you may damage the heater tubes by placing unit on its side.

Step 3. Use a vacuum cleaner and or a damp cloth to clean the air intake. The procedure should be done at least once a week.

Lubricate the Sprockets & Chains – Monthly

Step 1. DISCONNECT POWER SOURCE.

Step 2. Remove the panel which exposes chain drive.

Step 3. Using an extreme pressure, synthetic chain lubricant with a temperature range up to 400°F. Apply liberally onto chain and sprockets.

Step 4. Replace panel, reconnect power source and test unit.

BakeMax
www.BakeMax.com

Wiring Diagram

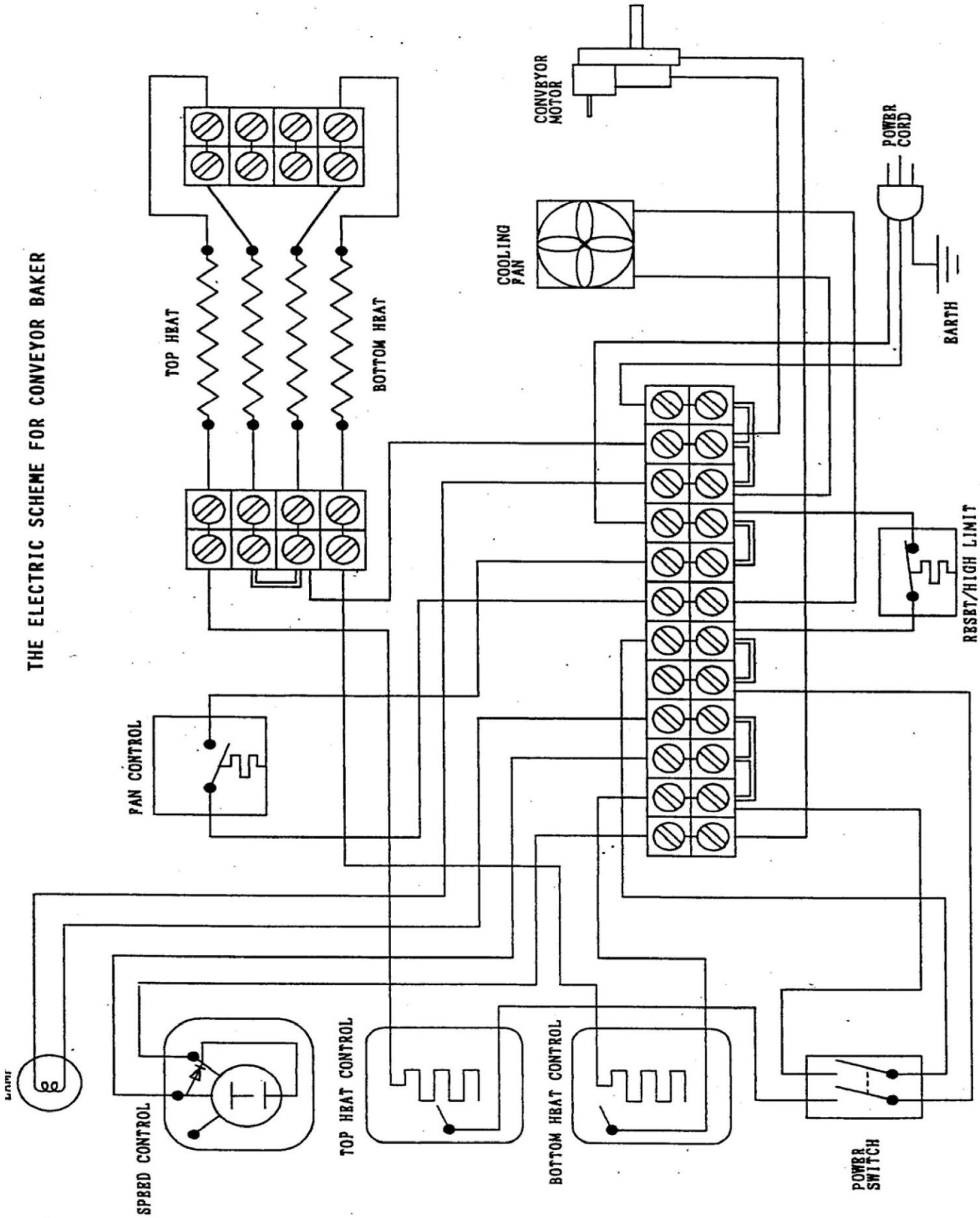

www.BakeMax.com

Parts Breakdown & Parts List

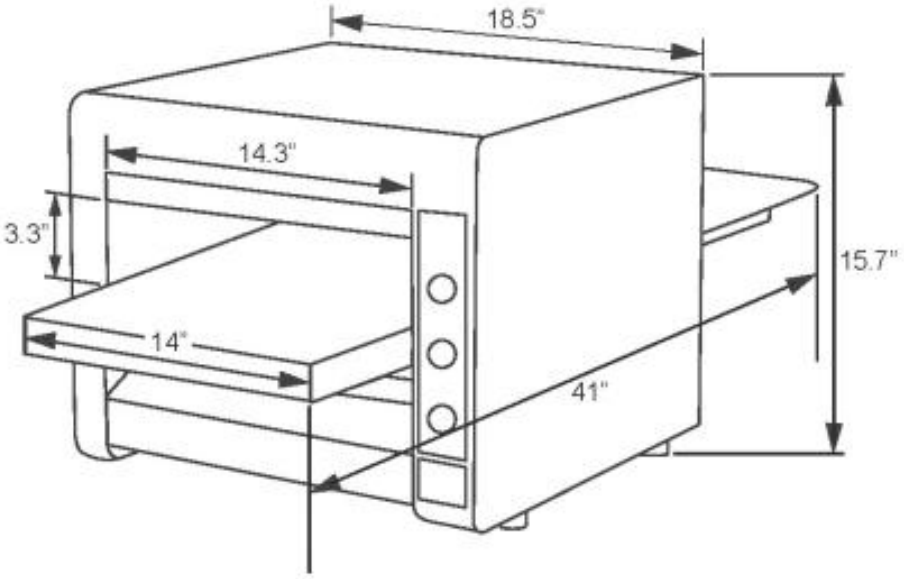

BakeMax®
www.BakeMa

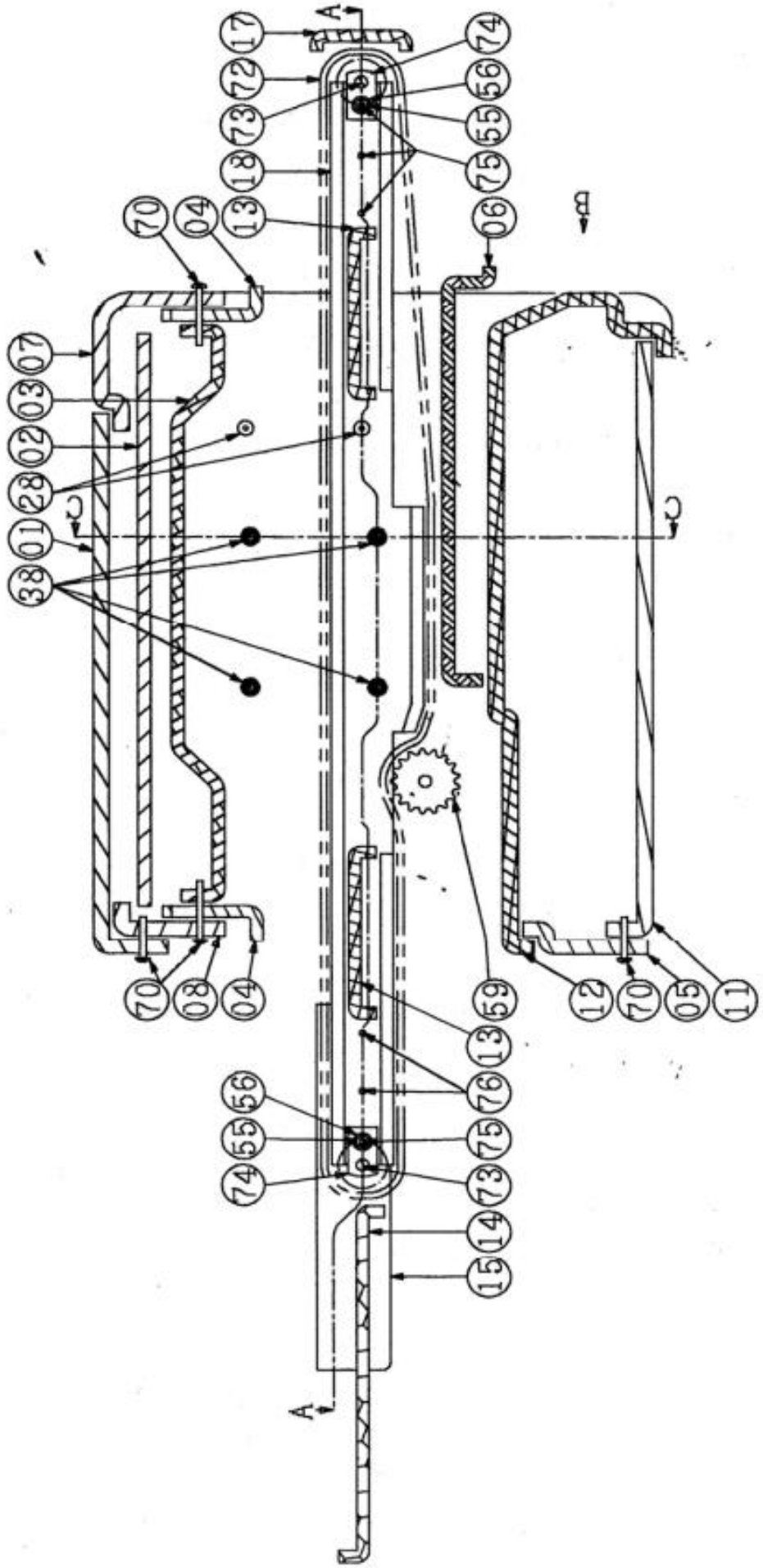

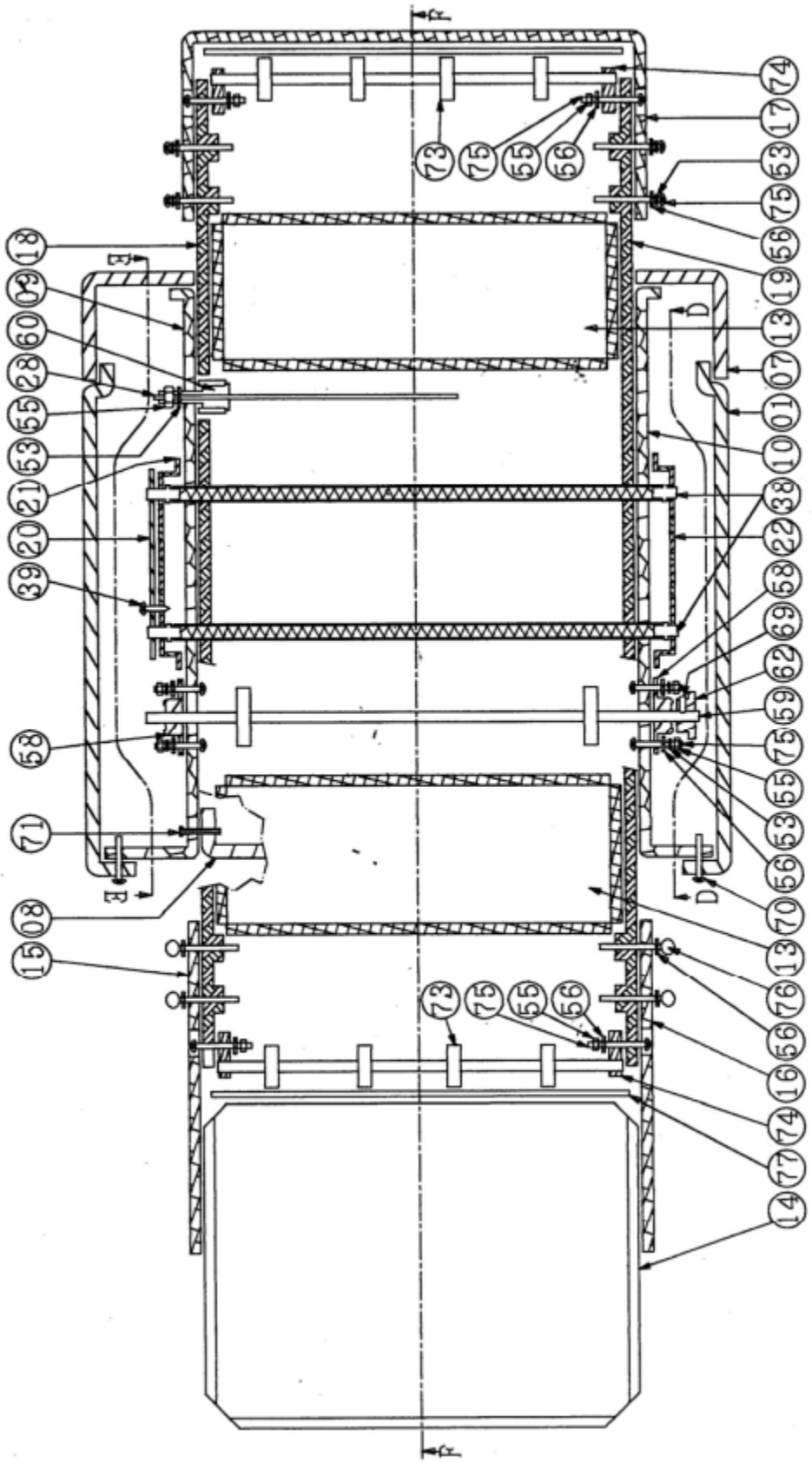
F
73
75
55
56
74
17
53
75
56
19
13
07
01
10
38
22
58
69
62
59
75
55
53
56
70
13
76
56
16
74
77
14
18
E
09
60
28
55
53
21
20
39
58
71
08
15
D

BakeMax®
www.BakeMax.com

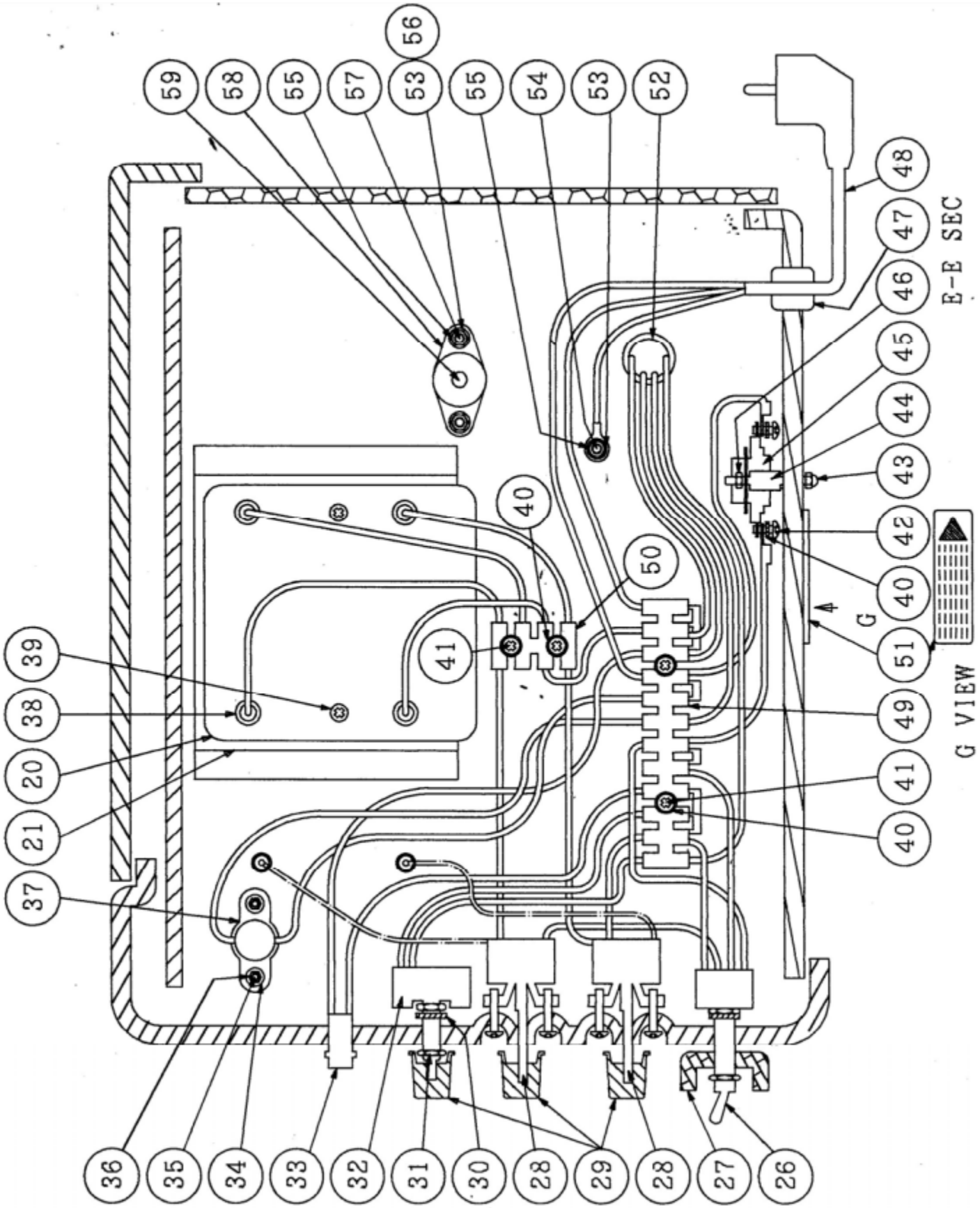

BakeMax®
www.BakeMax.com

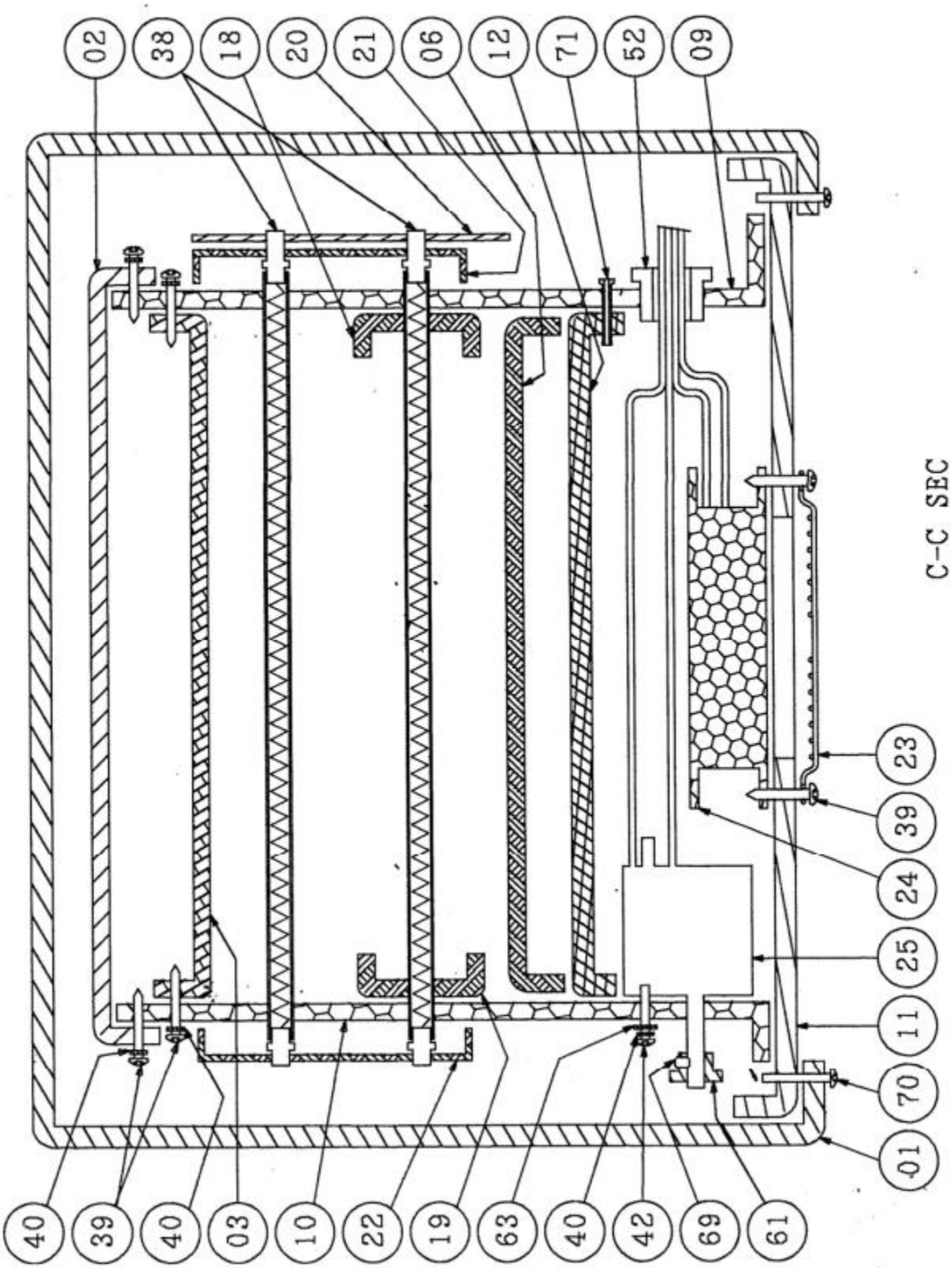

C-C SEC

www.BakeMax.com

Parts List

#1 – CB001/001 – Stainless Steel Cover	#2 – CB001/002 – Fan Terminal	#3 – CB001/003 – Insulation Plate
#4 – CB001/004 – Plate Front	#5 – CB001/005 – Cover Rear	#6 – CB001/006 – Crumb Tray
#7 – CB001/007 – Front Plate	#8 – CB001/008 – Rear Plate	#9 – CB001/009 – Left Plate
#10 – CB001/010 – Right Plate	#11 – CB001/011 – Base Plate	#12 – CB001/012 – Insulation Plate Middle
#13 – CB001/013 – Conveyor Frame	#14-16 – CB001/014 – Stainless Steel Complete In & Out Tray	#17-19 – CB001/017 – Stainless Steel Conveyor Guard
#23-24 – CB001/024 – Fan with Protection	#25 – CB001/025 – Drive Motor Complete	#26 – CB001/026 – On/Off Switch 4P
#27 – CB001/027 – Switch Guard	#28-1 – CB001/028T – Top Thermostat 250C	#28-2 – CB001/028B – Bottom Thermostat 320C
#29 – CB001/029 – Knob	#30 – CB001/030 – Washer	#31 – CB001/031 – Thin Nut
#32 – CB001/032 – Speed Regulator (230V 1000Ohm)	#33 – CB001/033 – Power Indicator Light	#34 – CB001/034 – Nut
#35 – CB001/035 – Washer	#36 – CB001/036 – Screw	#37 – CB001/037 – High Limit T.O.D.36TH F65
#38 – CB001/038 – Heating Element	#39 – CB001/039 – Self-Tapping Screw	#40 – CB001/040 – Toothed Washer
#41 – CB001/041 – Screw	#42 – CB001/042 – Screw	#43 – CB001/043 – Cap Nut for High Limit
#44 – CB001/044 – Screw Spacer	#45 – CB001/045 – High Limit with Reset (CR-1)	#46 – CB001/046 – Nut for High Limit
#48 – CB001/048 – Power Cord Nema 5-20P	#49 – CB001/049 – Terminal Block PA-12 (12P)	#50 – CB001/050 – Terminal Block PA-8 (8P)
#51 – CB001/051 – Reset Sticker	#52 – CB001/052 – Wire Grommet	#53 – CB001/053 – Lock Washer
#54 – CB001/054 – Screw	#55 – CB001/055 – Nut	#56 – CB001/056 – Washer
#57 – CB001/057 – Screw	#58 – CB001/058 – Teflon Guide	#59 – CB001/059 – Drive Shaft
#60 – CB001/060 – Temperature Probe Holder	#61 – CB001/061 – Gear 11T	#62 – CB001/062 – Gear 17T
#63 – CB001/063 – Washer	#64 – CB001/064 – Chain (#25x56 Mesh)	#65 – CB001/065 – Nut for Foot
#66 – CB001/066 – Foot	#67 – CB001/067 – Lock Washer	#68 – CB001/068 – Control Sticker
#70 – CB001/070 – Screw	#71 – CB001/071 – Rivet	#72 – CB001/072 – Stainless Steel Conveyor Belt (Width 35.5cm)
#73 – CB001/073 – Drive Shaft	#74 – CB001/074 – Teflon Holder	

Warranty & Service

BakeMax provides a 1-Year Limited Parts and Labor warranty on most items, there are select items which carry a Limited 2-Year Warranty. Extended Warranty is available on some products. Please contact us for details. The Warranty is not transferable and is limited to original installation of equipment sold by BakeMax for the original user.

For all Warranty Claims, Proof of Purchase and/or Serial Number is required. Once the machine is approved, BakeMax will provide our customers with on-site Warranty Coverage on all equipment more than 100lbs. BakeMax assumes no responsibility for down time or loss of product. Repairs must be Pre-Authorized by BakeMax and have a Service Authorization Number issued prior to commencing Warranty Service.

Warranty begins 10-Days after shipping from warehouse; delays in installation which would extend the Warranty must be Approved. All equipment must be installed and connected by Qualified Professionals in accordance with the Manual Specification. Products shipped are to be inspected at time of delivery, the receiver is responsible for inspection.

Any abuse or improper use of the equipment will void the warranty. This includes failure to follow all cleaning instructions, improper installation, improper maintenance, failure to follow capacity charts, improperly wired electrical connections. The Warranty does not apply to abuse, willful or accidental damage, or to products used for other than their intended purpose. Normal wear parts such as Accessories, Attachments, or Electrical Components such as Fuses, Bulbs, Elements, and Switches carry a 90-Day Warranty only.

Bench Warranty (Machines Weighing 100 lb. or less)

Once the machine is Approved for Warranty Service, if the machine requires Warranty work in less than 30 days of purchase date, BakeMax will pay all shipping charges. Once the machine is received and repaired it will be returned to the user at BakeMax expense. Freight Damages during return shipping is the responsibility of the owner of the machine.

The following is not covered under the BakeMax Warranty:

1. Overtime Labor Rates are not covered by BakeMax.
2. All parts will be shipped via Ground Courier only; If Express Shipping is required, it will be the responsibility of the Customer or Dealer.
3. Travel for Warranty Service is covered up to 100 Miles /160 Km Roundtrip, any further milage will be the responsibility of the Customer or Dealer.
4. There is no on-site Warranty Service for Residential Addresses or addresses outside of the contiguous United States (*Lower 48)* or Canada.

***BakeMax machines sold outside of the contiguous United States* (*Lower 48), or Canada will carry 1-Year Parts Warranty only.*

Questions? OEM Parts?
Toll Free: 1-800-565-2253
Email: Info@BakeMax.com
www.BakeMax.com

BakeMax®
www.BakeMax.com