JET-TECH

Project name:	
Location:	
Item:	Qty:
Model:	

EV22

HIGH-TEMP DOOR TYPE DISHWASHER

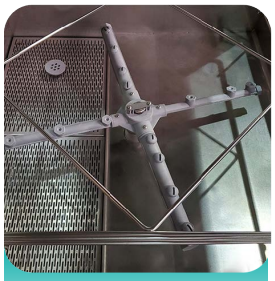

INNER STAINLESS STEEL WASH TANK

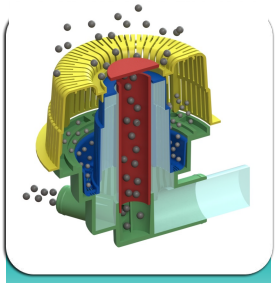

dFILTER® SYSTEM

OPTIONS:

- Pressure reducing valve (PRV)
- Drain water tempering kit

ENERGY STAR

Intertek

Intertek

CONSTRUCTION FEATURES

- Body, external housing, wash tank and all chassis component in brushed stainless steel - type AISI 304 16 gauge
- Upper and lower wash and rinse jets on revolving arms constructed of reinforced fiberglass; easy to remove and clean without the need for tools
- Adjustable bullet-style feet
- Safety two-way automatic micro-switch on the door controlling the operation of the wash motor-pumps
- Independently-operated heating elements alternating between booster and wash tank
- Alternating heating resistors reducing maximum absorption thereby reducing energy costs
- Door opening with overall clearance of 16.75 in. (425 mm) with ergonomic door handle
- New dFilter system®
- Automatic fill and water level regulation of the wash tank
- Wash pumps protected with double scrap filters easy to remove for quick cleaning and proper maintenance
- Machine can be installed either as an in-line or corner application with simple field modification
- Front mounted control panel with digital temperature displays
- Standard equipment includes : One open combination rack and one peg dish rack 19.75” x 19.75” (500 mm x 500 mm)

TECHNICAL FEATURES

- Rack capacity: 19.75” x 19.75” (500 mm x 500 mm)
- Total cycle: Two cycles (2-3 Min) Rinse (12-15 Sec)
- Hourly production: up to 30 racks/hr.
- Wash tank capacity: 5.25 U.S. Gallons (21 Liters)
- Booster capacity: 2.62 U.S. Gallons (10 Liters)
- Wash temperature: 150°F (65°C) minimum / controlled electronically
- Final rinse temperature: 185°-194°F (85°-90°C.) minimum / controlled electronically
- Incoming water temperature: Minimum 122°F. (50°C.)
- Incoming water pressure: 30 p.s.i. (2 bar)
- Water consumption per cycle @ 30 psi: 0.85 U.S. Gallons (2.7 Liters)
- Washing pump power: 1 H.P.
- Power supply: 208-240V/60Hz (Single phase)
- Tank heating element: 4.0 KW
- Booster heating element: 4.0 KW
- Maximum power rating: 4.8 KW - 19.8 to 22.8A
- Power Supply: 208-240V/60Hz (three phase)
- Tank heating element: 4.0KW
- Booster heating element: 6.0KW
- Maximum power rating: 6.8KW-16.2 to 18.7A
- Machine weight: 308 lbs. (140 kg.)
- Ship weight: 340 lbs. (154.5 kg.)

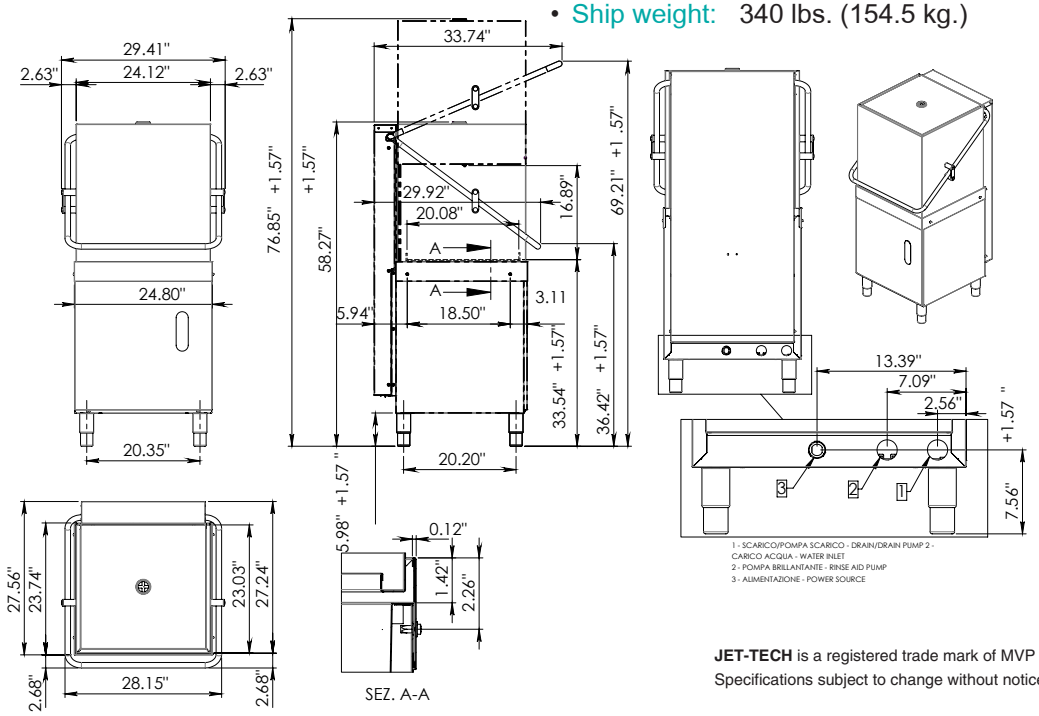

JET-TECH is a registered trade mark of MVP Group.
Specifications subject to change without notice.

5659 Royalmount Ave.
Montreal, QC, Canada H4P 2P9
Telephone: 514.737.9701 / Toll Free: 888.275.4538
Fax: 514.342.3854 / Toll Free: 877.453.8832
sales@mvpgroupcorp.com / mvpgroupcorp.com

12000 Biscayne Blvd., Suite # 108
Miami, FL, United States 33181
Telephone: 786.600.4687 / Toll Free: 844.218.8477
Fax: 786.661.4100