MASTER-BILT®
Refrigeration Solutions

BEL/BEM-CU Series
Installation & Operations Manual

Master-Bilt Products
908 Highway 15 North
New Albany, MS 38652
Phone: (800) 684-8988

TABLE OF CONTENTS

INTRODUCTION **3**
WARNING LABELS AND SAFETY INSTRUCTIONS **4**
PRE-INSTALLATION INSTRUCTIONS **5**
INSTRUCTIONS ON DELIVERY 5
PACKING LIST AND LOCATION OF ITEMS 5
INSPECTION FOR SHIPPING DAMAGE 6
INSTALLATION INSTRUCTIONS **7**
GENERAL INSTRUCTIONS 7
STORE CONDITIONS 7
LOCATION 7
JOINING MULTIPLE SECTIONS 10
DOOR ADJUSTMENT 11
PLUMBING 12
INSTALLING THE KICKPLATE 14
INSTALLING JOINING TRIM 14
REMOVING AND REPLACING THE ENDS, PARTITIONS AND PLEXIGLASS 15
INSTALLING REAR CLOSEOFF AND ENDSKIRTS 16
INSTALLING CONDENSING UNIT AND WIRING 17
INSTALLING SHROUDS 18
INSTALLING SHELVES, CLEANOUT PAN AND WIRE BOTTOM SHELF 19
REFRIGERATION SYSTEM EVACUATING AND CHARGING 20
MASTER-BILT ELECTRONIC REFRIGERATION CONTROL OPERATION **21**
DISPLAY 22
ADDITIONAL INFORMATION 24
LIST OF PARAMETERS 25
INSTALLATION 25
PROBE CONNECTION 25
STARTING PROCEDURE 25
FINAL CHECKLIST **26**
DOOR PLASTIC (GASKET RETAINER) REPLACEMENT **27**
DOOR GASKET REPLACEMENT **27**
LED DRIVER REPLACEMENT **27**
DOOR HEATER REPLACEMENT **27**
SERVICE INSTRUCTIONS (Trouble Shooting Guide) **28**
TECHNICIAN'S CONSIDERATIONS **29**
MASTER-BILT PART NUMBERS **31**
SALE AND DISPOSAL **32**
WIRING DIAGRAMS **34**

 All specifications within this publication subject to change without notice. © 2026 Master-Bilt Products, LLC. All rights reserved.

INTRODUCTION

Thank you for purchasing a Master-Bilt cabinet. This manual contains important instructions for installing, using and servicing a Master-Bilt **BEL/BEM-CU** Bottom Coil Endless Case. A parts list is included with this manual. Read all these documents carefully before installing or servicing your equipment.

NOTICE

Read this manual before installing your cabinet. Keep the manual and refer to it before doing any service on the equipment. Failure to do so could result in personal injury or damage to the cabinet.

DANGER

Improper or faulty hook-up of electrical components of the refrigeration units can result in severe injury or death.

NEVER use an extension cord to power these units. **All electrical wiring hook-ups must be done in accordance with all applicable local, regional or national standards.**

NOTICE

Installation and service of the refrigeration and electrical components of the cabinet must be performed by a refrigeration mechanic and/or a licensed electrician.

The portions of this manual covering refrigeration and electrical components contain technical instructions intended only for persons qualified to perform refrigeration and electrical work.
This manual cannot cover every installation, use or service situation. If you need additional information, call or write us:

Customer Service Department:

Master-Bilt Products
908 Highway 15 North
New Albany, MS 38652
Phone (800) 684-8988
Fax (866) 882-7629

 All specifications within this publication subject to change without notice. © 2026 Master-Bilt Products, LLC. All rights reserved.

WARNING LABELS AND SAFETY INSTRUCTIONS

This symbol is the safety-alert symbol. When you see this symbol on your cabinet or in this manual, be alert to the potential for personal injury or damage to your equipment.

Be sure you understand all safety messages and always follow recommended precautions and safe operating practices.

NOTICE TO EMPLOYERS

You must make sure that everyone who installs, uses or services your cabinet is thoroughly familiar with all safety information and procedures.

Important safety information is presented in this section and throughout this section and throughout the manual. The following signal words are used in the warnings and safety messages:

DANGER: Severe injury or death will occur if you ignore the message.

WARNING: Severe injury or death can occur if you ignore the message.

CAUTION: Minor injury or damage to your cabinet can occur if you ignore the message.

NOTICE: This is important installation, operation or service information. If you ignore the message, you may damage your cabinet.

The warning and safety labels shown throughout this manual are placed on your Master-Bilt Products cabinet at the factory. Follow all warning label instructions. If any warning or safety labels become lost or damaged, call your customer service department at (800) 684-8988 for replacements.

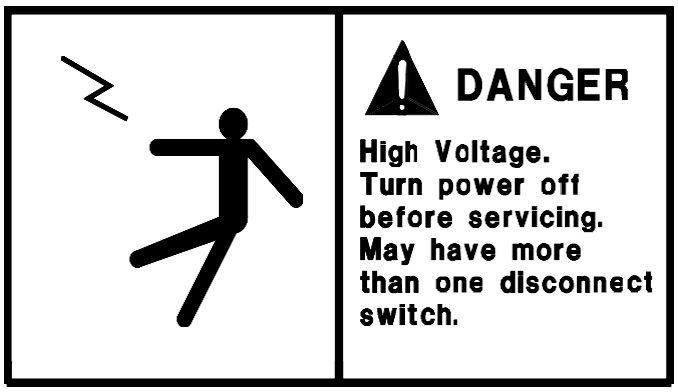

This label is located on top of the electrical control panel and on the wiring channel

 All specifications within this publication subject to change without notice. © 2026 Master-Bilt Products, LLC. All rights reserved.

PRE-INSTALLATION INSTRUCTIONS

INSTRUCTIONS ON DELIVERY

Figure 1 – Initial unloading of case

DELIVERY, UNPACKING, AND MOVEMENT OF CASES

Once the equipment has been delivered, a forklift with a minimum of 60” tines is required to be able to pick up the cases without damaging them. There are hooks attached to the bottom of all cases that allow them to be moved easily with the forklift. All cases and equipment need to be unloaded and moved to their desired location before unpacking or removing any of the protective gear surrounding the cases. If removed before, there is a chance the equipment will be damaged or scratched in the process.

Protective gear can be found on the outer edges and corners of the case as well as the wrapping which surrounds the center of the case. These are only to be removed once installation is ready, and cases are prepped to be bolted together at their final destination.

PACKING LIST AND LOCATION OF ITEMS

Checklist		
1)	Shims	
2)	Butyl	
3)	Manual Bag – Manual, Thermometer, and Hose Clamp	
4)	Legs	
5)	End Skirt and Brackets	
6)	Assembled PVC pipe	
7)	Balloon guard	
8)	Pan screen	
9)	Bag of screws	
10)	Pump bracket	
11)	Price-tag molding (6 per door)	
12)	Kick-plate jointer	
13)	Small and large drain tube	
14)	Condensate pump	
15)	Evaporator pan	
16)	Solenoid – If remote system	
17)	Clean out Trays (1 per door)	
18)	Shroud Braces (put count in box)	
19)	T-Molding and Sex Bolts	
20)	Bumper and Kickplates	

 All specifications within this publication subject to change without notice. © 2026 Master-Bilt Products, LLC. All rights reserved.

On the previous page is a general checklist for what parts can be found in the box located in the rightmost corner of the cabinet. The number of each part varies depending on the type of model ordered. Most parts can be found in the box shown in **Figure 6**. At the top of the box, you can find the end skirt in the center with the tubing to the left and the balloon guard screen in the top right corner. Below that you can find the shroud brackets, legs, moldings, and clean out trays all stacked on one another, as well as the evaporator pan in the bottom left corner and the condensate pump in the bottom right.

NOTE: If the cabinet will not fit through the doorway to the cabinet final location, the Condensing Unit(s) must be removed prior to the installation. See below figures that show quick connections and line set covers. Remove the line set cover and disconnect the quick connects via a suitable wrench. Once the disconnection has begun, finish promptly. Then the electrical can be disconnected. This should be done by removing the top of the condenser and disconnecting the wiring and the seal tight. If the cabinet is equipped with a wire harness, simply unplug the condenser.

Figure 2 – Line Set Cover

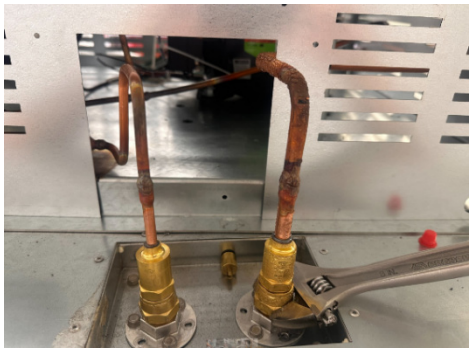

Figure 3 – Quick Connects

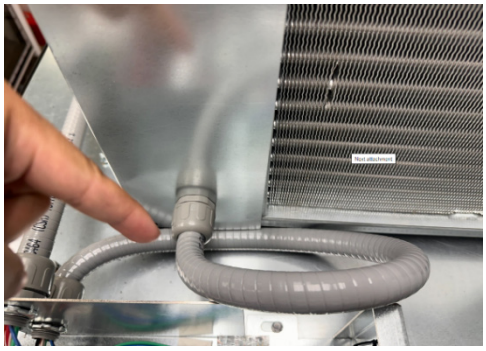

Figure 4 – Line Set Cover

The other set of parts in the cabinet contain the shelf install, door install, and shroud kits. As shown in **Figure 2**, these parts are stacked along the walls of the cabinet and are strapped to keep them in place during delivery.

Figure 5 – Part locations

Figure 6 – Part Box

INSPECTION FOR SHIPPING DAMAGE

You are responsible for filing all freight claims with the delivering truck line. Inspect all cartons and crates for damage as soon as they arrive. If damage is noted to shipping crates or cartons or if a shortage is found, note this on the Bill of Lading (all copies) prior to signing.

 All specifications within this publication subject to change without notice. © 2026 Master-Bilt Products, LLC. All rights reserved.

If damage is discovered when the cabinet is uncrated, immediately call the delivering truck line and follow up the call with a written report indicating concealed damage to your shipment. Ask for an immediate inspection of your concealed damage item. Crating material **must** be retained to show the inspector from the truck line.

INSTALLATION INSTRUCTIONS

GENERAL INSTRUCTIONS

1. Be sure the equipment is properly installed by competent service people.

2. Keep the equipment clean and sanitary so it will meet your local sanitation codes. Wipe up all spills, clean with water and a mild detergent, then rinse with clean water.

3. Rotate your stock so that older stock does not accumulate. This is especially important for ice cream. A "First-In, First-Out" rotation practice will keep the products in good sellable condition. Do not place product in a BEL when it is soft or partially thawed. Also, the product should not be put in the case for at least 6 hours after it is started.

4. Stock cases as quickly as possible, exposing only small quantities to store temperatures for short periods of time.

5. When replacing burned fluorescent bulb/LED light bar, be sure that the electrical power to the lighting circuit is turned off.

To comply with N.S.F. requirements, this cabinet must be sealed to the floor with NSF listed silicone sealant. Before moving the cabinet into place, route cabinet plumbing with P-trap to store drain line or install optional condensate pan.

6. **Disconnect shall be installed by the installer in the field**

STORE CONDITIONS

The Master-Bilt **BEL/BEM-CU** cases are designed to operate in the controlled environment of an air-conditioned store. The store temperature should be at or below 75°F and a relative humidity of 55% or less. At higher temperature or humidity conditions, the performance of these cases may be affected and the capacity diminished. It is not uncommon in a newly constructed store for the temperature and humidity to be above design conditions. These excessive conditions may produce sweating in the case until the store is operational, and the ambient environment is more desirable.

LOCATION

The Master-Bilt **BEL/BEM-CU** should not be positioned where it is directly exposed to rays of the sun or near a direct source of radiant heat or air flow.

Cabinet should not be built into an enclosed area. If this case is to be located against a wall there should be at least a 4” space between the wall and the back of the case, with 4” open space at top and 1” on both ends. This space will allow for the circulation of air behind the case which will prevent condensation on the exterior surfaces.

 All specifications within this publication subject to change without notice. © 2026 Master-Bilt Products, LLC. All rights reserved.

Make sure that the floor that will support this equipment is of adequate strength to prohibit sagging. After confirming the dimensions of the case with the blueprint measure off and mark on the floor the exact location of the cases for the entire lineup. Snap chalk lines where the base skids of the case are to be located as shown in **Figure 7**.

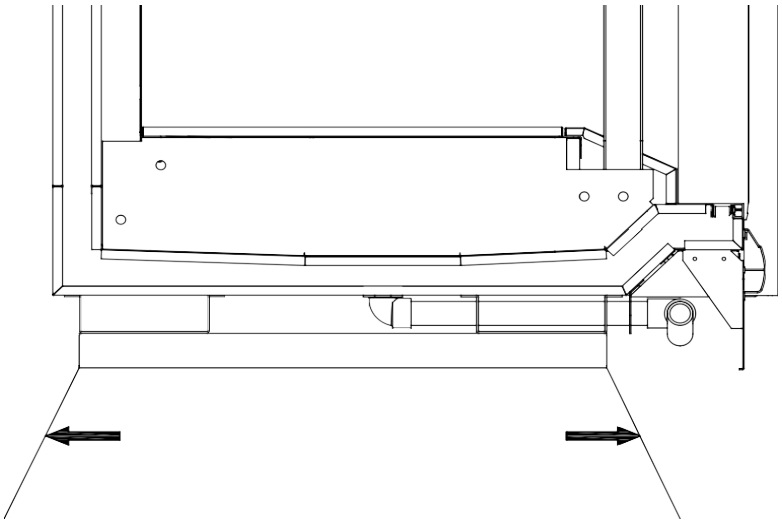

Figure 7 – Chalk lines at front and back edges of skids

 All specifications within this publication subject to change without notice. © 2026 Master-Bilt Products, LLC. All rights reserved.

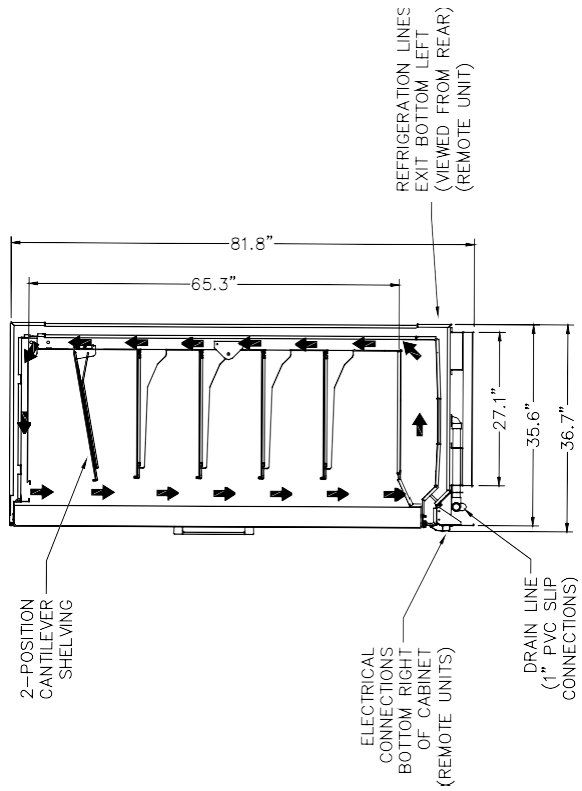

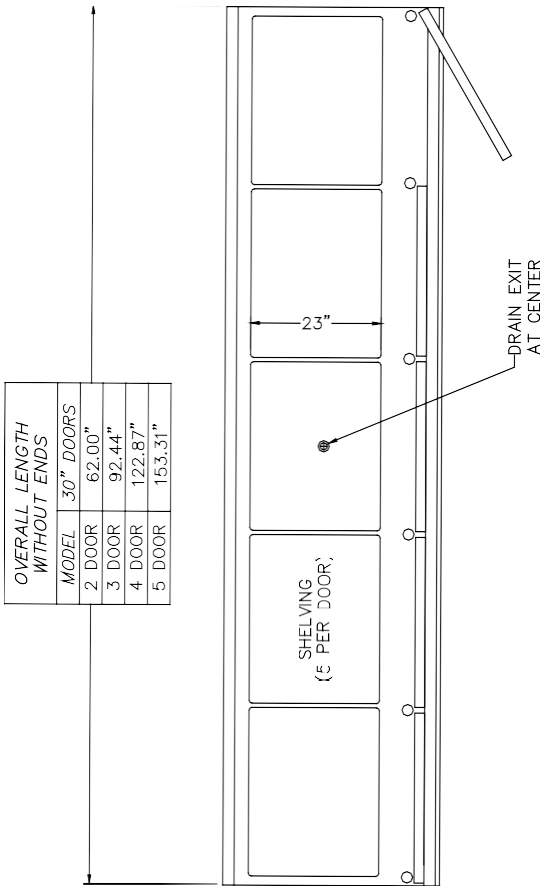

OVERALL LENGTH WITHOUT ENDS	
MODEL	30" DOORS
2 DOOR	62.00"
3 DOOR	92.44"
4 DOOR	122.87"
5 DOOR	153.31"

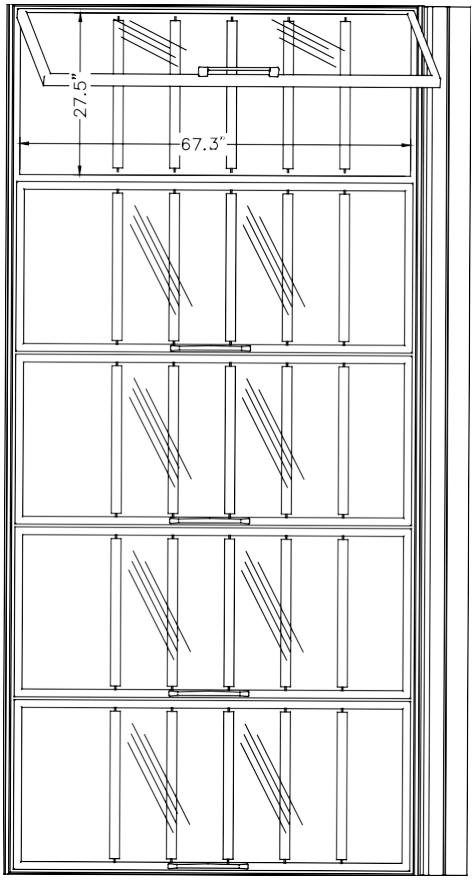

 All specifications within this publication subject to change without notice. © 2026 Master-Bilt Products, LLC. All rights reserved.

LEVELING

It is very important that this equipment be perfectly level. This will allow for proper and complete drainage of the evaporator coil and for proper case alignment. A perfectly level area is generally not available where the equipment is to be installed. Mark the location of all case joining points front and back. Use a transit to locate the highest point on the chalk lines. This point will be a reference point for determining shim-pack heights. Using the reference point, mark the difference directly on the floor to each joining point front and back. Shim each joining point to equal the reference point as required. Tape all shims in place. If the installation is an entire lineup install the case that will be positioned at the highest point first. Check that the equipment in the lineup is level as the installation proceeds.

JOINING MULTIPLE SECTIONS

Remove the case from its shipping skid. Set the first case into its desired position with required shims in preparation for joining it with its adjacent case.

Install the T-rail which is the piece of molding that covers the small gap between cases in a line up. Using tape, set the T rail in place just before the cases are sealed together.

The T-rail must be set in place before cases are bolted together. Attempting to position it afterward will damage the T-rail and result in improper fit.

Cases joined together require an application of butyl caulking to provide an air-tight seal. Apply a generous bead to all exposed foam edges at the end of the case. Inspect the bead to make sure there are no gaps and that there is sufficient material to provide a complete seal. The cases are now ready to be joined together. **Cases cannot be pulled together with the bolts.** Remove the second case from its shipping skid and move it into position against the end of the first case. Properly level the second case with the appropriate shims.

Bolt the cases together through the five holes that are provided in the end frame as shown in **Figure 8**. Tighten the bolts until all seams are fully closed. Do not overtighten.

Bolt the included sex bolts through the door frame to secure the door frames together as shown in **Figure 9**. Make sure that the gasket strips on each frame are intact and free of damage to ensure a proper seal between the two frame sections. Place a small bead of butyl behind the gasket strips to obtain a more solid seal. Repeat the above process for all other cases in the lineup.

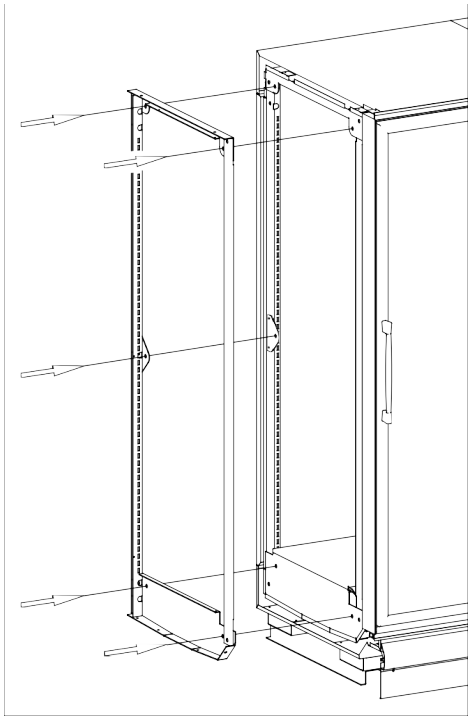

Figure 8 – Case joining detail

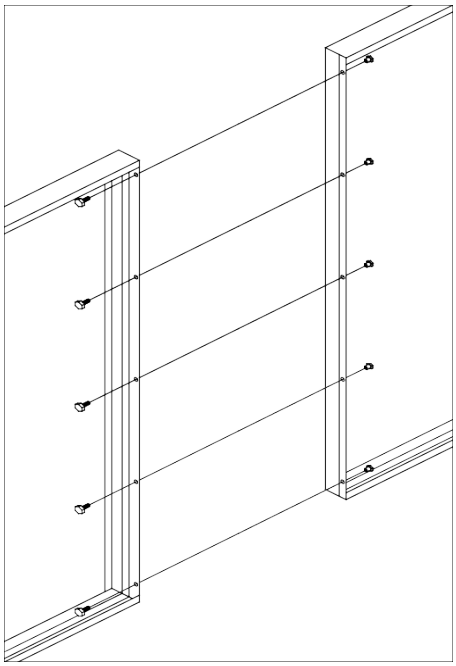

Figure 9 – Door frame

 All specifications within this publication subject to change without notice. © 2026 Master-Bilt Products, LLC. All rights reserved.

DOOR ADJUSTMENT

For adjustment needed when doors are unleveled or seem to be sagging (sawtooth doors), there are adjustors or screws that can be turned to tune the doors to their desired position. **Be sure to use a level to make sure the door is flush with the rest of the unit and is perpendicular to the floor it's sitting on before making any adjustments.**

Figure 10 – Front adjuster

Figure- 11 Open door test

The adjuster on the front of the door shown in **Figure 10** should be turned counterclockwise to increase the tension when opening or shutting the door.

You should test this by slightly opening the door and seeing if it shuts on its own or not. If the door does not shut, then you need to increase the tension. If you need to release tension, turn the adjuster clockwise.

The adjuster located on the inside of the door shown in **Figure 11** can be turned clockwise or counterclockwise to fix the sawtooth effect that can be seen between sagging doors.

Turning the adjuster counterclockwise, pulls the door toward the operator and raises the opposite corner. Turning it clockwise does the opposite – it pushes the door away from the operator and lowers the opposite corner.

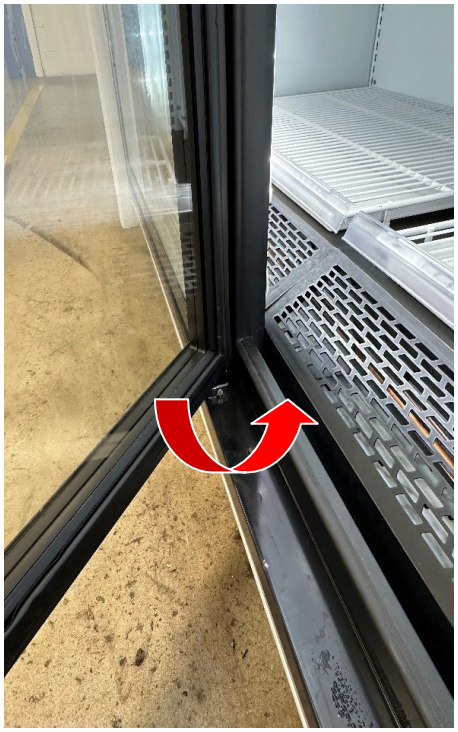

Figure 12 – interior adjuster

Figure 13 – Door adjustments

 All specifications within this publication subject to change without notice. © 2026 Master-Bilt Products, LLC. All rights reserved.

PLUMBING

The **BEL/BEM-CU** is equipped with a condensate drain kit to be installed. The drain kit connects to the bottom middle of the cabinet. This drain kit includes a (2) 90 Elbows, a Threaded Fitting, a Barbed Fitting, and a Trap. Connect the supplied flexible hose to the barbed fitting and to the drain or condensate pump, whichever is applicable. It is very important that this trap be installed as it will result in diminished performance of the case without it. The kickplate will need to be removed to see the piping.

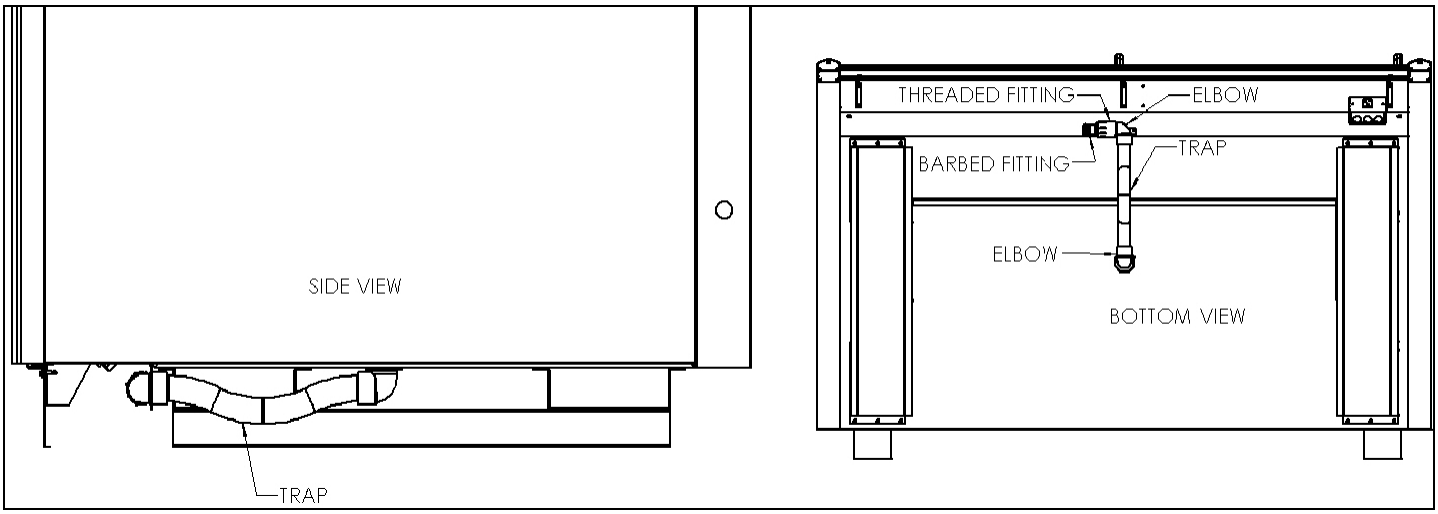

Figure 14 – Drain detail

1. Always install drains in accordance with local codes.
2. Use the largest possible size pipe for drains, one inch minimum is recommended.
3. Provide as much downhill slope as possible.
4. Prevent drains from freezing. Do not install drains in contact with uninsulated suction lines.

NOTICE TO STORE OWNERS / MANAGERS

Moisture or liquid around or under the cabinet is a potential slip/fall hazard for persons walking by or working in the general area of the cabinet. Any cabinet malfunction or housekeeping problem that creates a slip/fall hazard around or under the cabinet should be corrected <u>immediately</u>.

If moisture or liquid is observed around or under a Master-Bilt cabinet, an immediate investigation should be made by qualified personnel to determine the source of the moisture or liquid. The investigation should determine if the cabinet is malfunctioning or if there is a drainpipe leaking.

 All specifications within this publication subject to change without notice. © 2026 Master-Bilt Products, LLC. All rights reserved.

Condensate pump and pan

The collection pan as shown in **Figure 15** should be installed at the top of the unit with plastic tubing leading down to the pump below. The tubing should terminate in the pan and raise the float switch to turn on the heater, which will evaporate the water.

Another set of tubing can be attached to the side port of the condensate pump with a metal pipe fitting. This tubing should be led to a drain or discharge point where the excess water is able to be let out to avoid water pooling on top of the cabinet.

The blue wires from the pump housing are an auxiliary contact that is not used in this application. You need to cap the end of these wires together as they are in **Figure 16** below.

Figure 15 – Collection pan

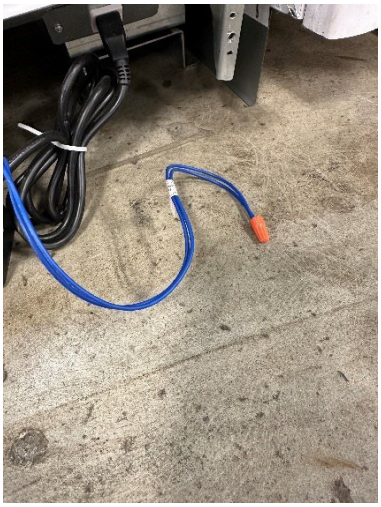

Figure 16 – Safety switch

Figure 17 – Condensate pump

 All specifications within this publication subject to change without notice. © 2026 Master-Bilt Products, LLC. All rights reserved.

INSTALLING THE KICKPLATE

Install the kickplate behind the bumper and in front of the kickplate bracket. Secure the kickplate first by attaching it to the top pre-drilled holes of the kickplate brackets using the supplied #10x3/4” sheet metal screws. Then install the bumper by placing the top in the retaining rail and placing sheet metal screws through the bottom pre-drilled holes of the bracket. Refer to **Figure 18** for the placement of the kickplate.

INSTALLING JOINING TRIM

To install the kickplate joiner, first make sure that the bumper is removed. Attach the kickplate retainer with the (2) #10x3/4” self-drilling sheet metal screws provided with the kit as shown in **Figure 19**. Reattach the bumper onto the bumper retaining rail and attach with screws as shown in Figure 15. (Joiner is only for cabinets that have a partition in between them)

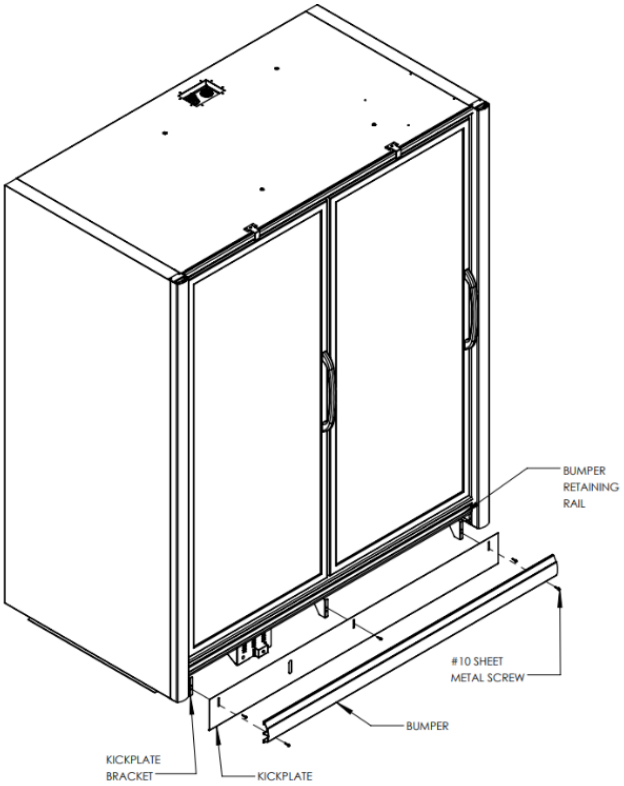

Figure 18 –Kickplate installation

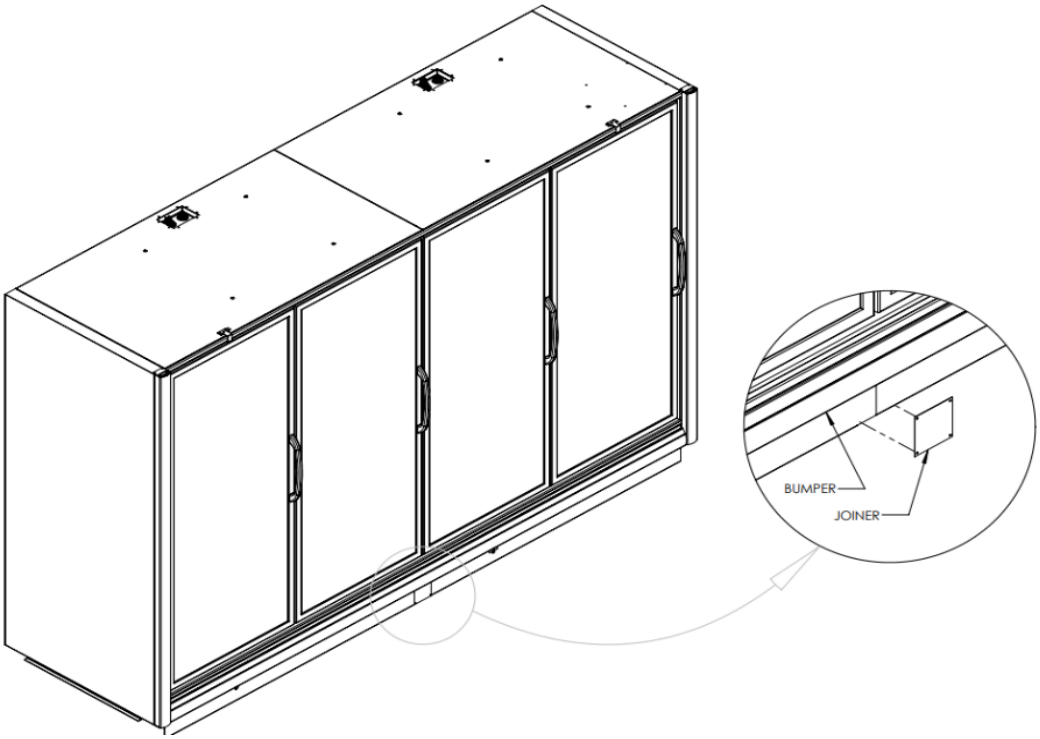

Figure 19 – Kickplate joiner details

 All specifications within this publication subject to change without notice. © 2026 Master-Bilt Products, LLC. All rights reserved.

REMOVING AND REPLACING THE ENDS, PARTITIONS AND PLEXIGLASS

The ends of a **BEL/BEM-CU** are bolted to the ends of the cabinet itself. There are five attachment points on each end as shown in **Figure 20**. Each attachment point uses a 5/16” hex head bolt and washer. The bolts are fed through the holes in the end frames and into threaded retainers in the end panel. Care should be taken not to overtighten the bolts as this could lead to the stripping of the threaded retainer. Consult the factory to see if it is necessary to remove or replace the end of a **BEL/BEM-CU**. Partitions will be installed using the same process while, with plexiglass, the bolts will pass through.

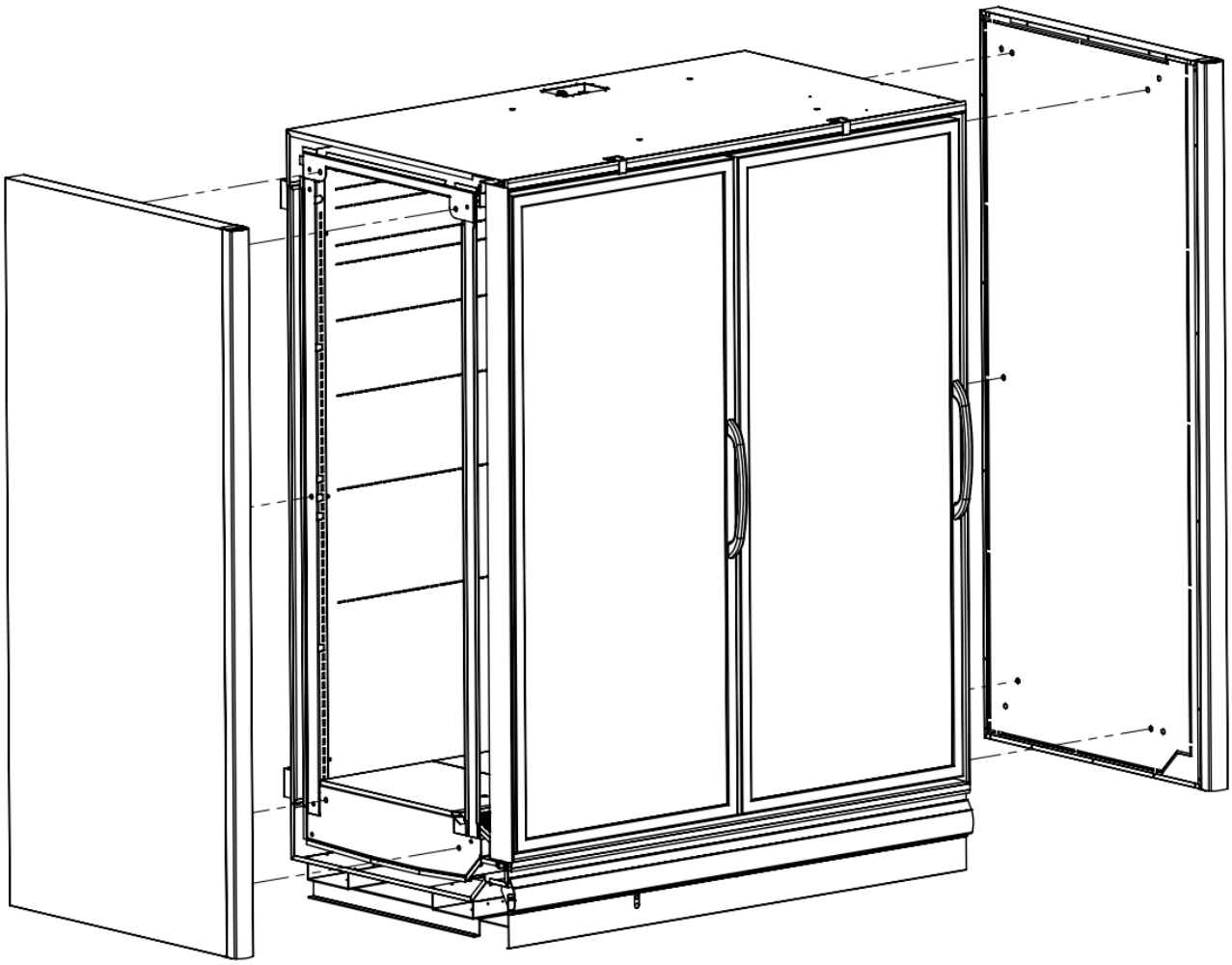

Figure 20 – End panel detail

 All specifications within this publication subject to change without notice. © 2026 Master-Bilt Products, LLC. All rights reserved.

INSTALLING REAR CLOSEOFF AND ENDSKIRTS

Figure 24- Rear Close-Off

The rear close-off panel should be installed after the ends and shrouds have been put on. The wide piece of the panel should be placed flush against the side of the cabinet and then bolted into the cabinet itself as well as into the shrouds above. Once the panel is mounted, push the cabinet back unit the panel hits the wall. Mount the thin part of the panel into the wall and bolt it until it no longer moves. Doing this will provide the cabinet with enough space in the back to be able to circulate air in and out of the system.

The end skirts should be installed with the brackets seen in **Figure 26**. The brackets should be placed under the cabinet with the flange pointing towards the side of the fridge. To install the brackets, peel the double-sided tape located on the top and line up the flange with one of the corresponding holes on the end skirt as shown in **Figure 25**. Once the bracket is securely fastened and lined up correctly, bolt the end skirt to the hanging flange.

Figure 25 – End Skirt

Figure 26 – End Skirt Brackets

 All specifications within this publication subject to change without notice. © 2026 Master-Bilt Products, LLC. All rights reserved.

INSTALLING CONDENSING UNIT AND WIRING

The blank squares you see in **Figure 27** are the general locations for where **all** the equipment should go. The boxes respectively from nearest to farthest house the control box, the evaporator pan, and the condensing unit. Be sure to install the condenser(s) in the same place that the were disconnected from if they were removed to enter the building. The control box should be moved to its correct spot on top of the cabinet as shown in **Figure 28**. Once everything is in place, connect the control box to the condensing in the same fashion it was removed in. Then take the quick connect hookups and fasten them to the condensing unit. Refer to Table 1 to see what torque value should be used depending on the size of the quick connect.

The balloon guard is installed last on the rear side of the condensing unit. As shown in **Figure 29**, mount the balloon guard on the rear coil and angle the wire **so that if an object were to be sucked in it would be blocked and there would still be a constant flow.**

When disconnecting the quick connects, ensure the system has been shut off for a minimum of 10 minutes.

Table 1: Craft Quick Connect Torque Specs

Size	Torque value (N.m)
1/4	25-30
3/8	25-30
1/2	25-30

Figure 27 – Top View of Cabinet

Figure 28 – Control Box

Figure 29 – Condensing unit

 All specifications within this publication subject to change without notice. © 2026 Master-Bilt Products, LLC. All rights reserved.

INSTALLING SHROUDS

Shrouds are installed on top of the cabinet on the front and side panels. Install the front shroud first. Do this by taking the front shroud and placing the bottom flange facing outward toward the cabinet doors as shown in **Figure 22**. Bolt the shroud into the front panel and continue to install the angle brackets. Angle brackets are to be mounted on the top flange of the shroud and then bolted on to the top of the cabinet. Make sure that the shroud is level or perpendicular to the cabinet after each installation.

Install the side shrouds by positioning them in line with the front shroud and bolting them together. For the side shrouds, the bottom flange should be on the inside as shown in **Figure 21.** Once they are attached to the front shroud, you can then bolt the shrouds into the cabinet and attach the angle brackets as done before on the front.

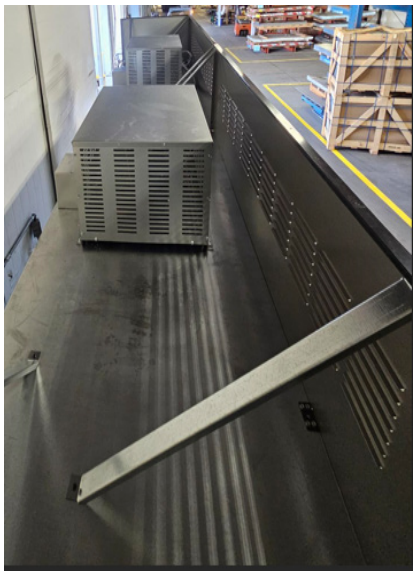

Figure 21 – Full Shroud from above

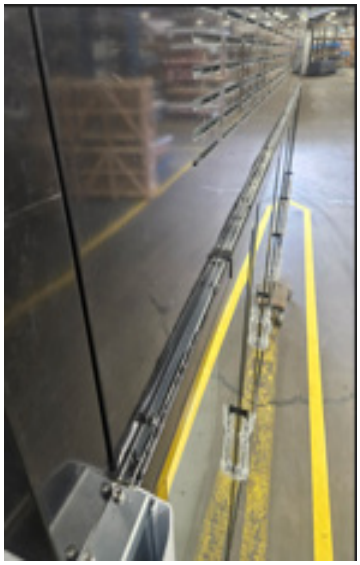

Figure 22 – Front shroud

Figure 23 – Side shroud

 All specifications within this publication subject to change without notice. © 2026 Master-Bilt Products, LLC. All rights reserved.

INSTALLING SHELVES, CLEANOUT PAN, AND WIRE BOTTOM SHELF

Open the cabinet door as much as possible before attempting to install shelving. Once the cabinet door is open to its fullest extent, take the given shelves and slide each one back until they reach the back wall. Position your shelves to their desired location and use the hooks on the back to slide the shelf into its designated track. After the hooks are placed into the track, push down gently on the shelf to lock it into place.

The cleanout pan and wire bottom shelf should be placed directly under the bottom shelf at the bottom of the cabinet. First install the cleanout pan and then insert the wire bottom shelf right above it. Line up both in accordance with the shelving above.

Figure 30 – Cabinet Shelving

 All specifications within this publication subject to change without notice. © 2026 Master-Bilt Products, LLC. All rights reserved.

ELECTRICAL WARNING

Before servicing electrical components in the case or the doors or door frames make sure all power to case is off. Always use a qualified technician.

It is very important that full voltage and overcurrent protection requirements for condensing units, defrost heaters, fans, door and frame heaters, etc. be provided at installation. Wire sizing must be adequate to maintain full voltage under amperage loads specified in the charts in this manual.

REFRIGERANT PIPING

There is no need for Technician's field piping on these systems. They are self-contained R290 systems that have been charged at the factory and completely tested before leaving.

REFRIGERATION SYSTEM EVACUATING AND CHARGING

In the event of an issue in the field that requires a technician (technician must have EPA 608 certification) to open the refrigeration circuit, the technician must refer to the Technician's Considerations section in this manual on page #29 and follow the traditional instructions below:

1. Blow out all refrigerant lines with dry nitrogen or carbon dioxide to eliminate the possibility of dirt, scale, etc. remaining inside.

2. Connect all lines and leak test all connections.

3. Connect a good high vacuum pump to both the low and high side evacuation valves.

4. Operate the pump until a vacuum of 1500 microns (0.06 inches of mercury) absolute pressure is obtained. At this point, the vacuum should be broken by the introduction of refrigerant into the system, through a drier, until the pressure is brought up to zero pounds gauge. Repeat this procedure two more times. During the final evacuation, a vacuum of **500** microns (**0.02** inches of mercury) absolute pressure should be obtained. After this vacuum is reached, the system can be fully charged with refrigerant.

 All specifications within this publication subject to change without notice. © 2026 Master-Bilt Products, LLC. All rights reserved.

5. INDICATIONS AND KEYS

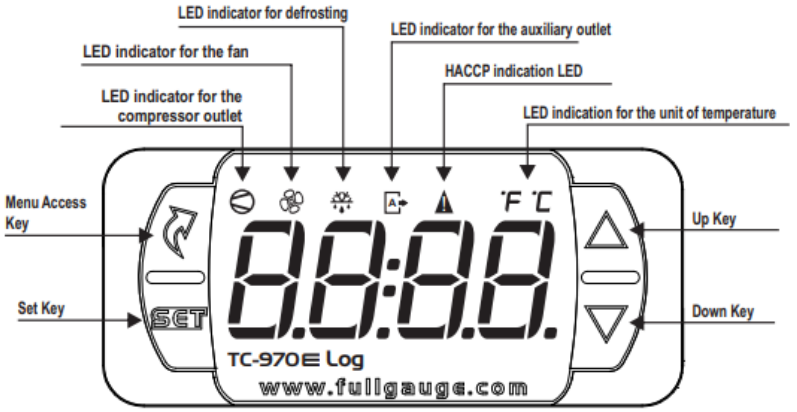

9.2 List of Key Functions

The keys listed act as shortcuts for the following functions:

SET	Short press: View date and time
SET	Short press: Stop the audible alarm
SET	Press for 2 seconds: Setpoint adjustment
▲	Short press: Activate / Deactivate economy mode
▲	Press for 2 seconds: Display of minimum and maximum temperatures
▲	Press for 2 seconds: When displaying temperature, compressor hour meter or door opening number records, clears history
▲	Press for 4 seconds: Manual defrost
▼	Short press: Turn on / off the lamp
▼	Press for 4 seconds: View process steps, temperature on sensors S2 / S3 / S4 and current setpoint
↻	Short press: enters the easy menu.
↻	Press for 4 seconds: shutdown of control functions
↻ and SET	Press for 2 seconds: Enter the HACCP menu
▲ and ▼	Short press: Enter menu selection

 All specifications within this publication subject to change without notice. © 2026 Master-Bilt Products, LLC. All rights reserved.

OPERATION

DISPLAY

During normal operation, the display shows the measured temperature. In addition, any of the following symbols may be displayed:

10.1 Signals

ECO	Operating on the Economic setpoint
oPEn	Open door indication
t-1	Temperature sensor 1
t-2	Temperature sensor 2
t-3	Temperature sensor 3
t-4	Temperature sensor 4
CLO	Adjust / View the date and time
LoPr	Low pressure event
Hi Pr	High pressure event
dEFr	Temperature locked on defrosting cycle
.	Indicates that the final defrosting temperature has not been reached
Flashing LED	Tray defrosting in the pre-defrost and drain stages or waiting for the second evaporator to finish defrosting
Flashing LED	Fast Freezing mode indicated
LOC	Function lock
OFF	Control functions off

10.2 Alarms

AoPn	Open door alarm
AtLO	Low room temperature alarm (sensor 1)
Athi	High room temperature alarm (sensor 1)
AtC1	High condenser temperature alarm (level 1)
AtC2	High condenser temperature alarm (level 2)
Adin	External alarm (digital input)
ALrc	Compressor exceeded maximum on time without reaching control temperature (setpoint)
APLo	Low pressure alarm (manual alarm required)
APHi	High pressure alarm (manual alarm required)
AMA1	Compressir maintenance alarm
AuLo	Low voltage alarm
AuHi	High voltage alarm
AdFL	Datalogger memory full
inib	Audible alarm deactivated

10.3 Errors

Err1	Room sensor error: sensor disconnected or damaged
Err2	Evaporator sensor error: sensor disconnected or damaged
Err3	Auxiliary sensor S3 error: sensor disconnected or damaged
Err4	Auxiliary sensor S4 error: sensor disconnected or damaged
ECLO	Clock not set
Eind	Error in choosing the measure to be preferentially displayed on the display. Parameterize function F136 - Preferred indication on the display.
EMEM	Contact Full Gauge
ECAL	Contact Full Gauge
PPPP	Reset function values

 All specifications within this publication subject to change without notice. © 2026 Master-Bilt Products, LLC. All rights reserved.

ADDITIONAL INFORMATION

How to See the Setpoint

- Press and immediately release the SET key: the display will show the setpoint value.
- Press and immediately release the SET key or wait for 5 seconds to display the probe value again.

Setting the set point (desired temperature)

- press SET for more than 2 seconds. then the set value will be displayed, and the message “SP” will appear, followed by the value for adjusting the normal setpoint.
- Using the UP or DOWN keys to modify the value
- press SET to confirm the new value then wait 10 seconds

Manual Defrost

- Within the dEFr option or by pressing the UP key for 4 seconds or using the external key connected to the digital input. Activation or deactivation is indicated by the message dEFr ON or dEFr OFF respectively.

Continuous Cycle

- When a defrost is not in progress, it can be activated by pressing and holding the UP button for about 3 seconds. The compressor operates to maintain the CCS setpoint for the time set through the CCt parameter. The cycle can be terminated before the end of the set time using the same activation button (UP button for 3 seconds).

How to Change a Parameter Value

- Enter the Programming mode by press and immediately releasing the SET + DOWN buttons.
- Using the UP and DOWN keys go to the CodE option and short press.
- Using the UP and DOWN keys enter the code “123” and confirm using the SET key. This will allow the user to change the parameter values.
- Within the main menu, select the option “Func” and select the desired function using the UP or DOWN keys.
- Select the function using the SET key and then use the UP or DOWN key to set the desired value.

  To exit: Long Press the SET key until the “- - - -“ appears.

How to Assign a MODBUS Address

- Follow steps 1-5 of “How to Change a parameter Value” to access the function menu.
- Using the UP or DOWN key scroll to function (F 142)
- Press SET to select.
- Choose the address number using the UP or DOWN buttons and press SET again to save.

  To exit: Long Press the SET key until the “- - - -“ appears.

  Note: that devices cannot have duplicate addresses on the network. Assigning MODBUS addresses prior to terminating the network and leaving the address of device 1 as unused until the network is connected can prevent duplicate addressing network issues.

How to Lock/Unlock the Keyboard

To lock the keyboard:

- Access the option LOC within the easy menu using the MENU ACCESS KEY and then confirm using the SET key.
- The message “no” will be displayed if the lock is disabled.
- Press and hold the DOWN key for the time configured for this function (F 140).
- Activation will be indicated by the message “LOC On” and will only occur if the function (F 139) is set to 1 or 2.

To unlock the keyboard:

 All specifications within this publication subject to change without notice. © 2026 Master-Bilt Products, LLC. All rights reserved.

- Turn off the controller and turn it on again with the DOWN key pressed.
- Keep the key pressed until the message “LOC OFF” indicates that it has been unlocked (10 seconds)

LIST OF PARAMETERS

Here is a list of the parameters the value of which can be changed in the programming mode, as well as their ranges.

Display Symbol	Parameters	Range	Factory Setting	Factory Setting
			BEM	BEL
F01	Setpoint Temperature	-15°F - 40°F	-	- 2°F
F01	Setpoint Temperature	32°F - 50°F	35°F	-
F17	Delay time when powering up the controller		2	2
F20	Interval between defrost (cooling)		720	360
F21	Interval between defrost (heating)		720	720
F28	Number of Defrost per Day		4	4
F42	Drain Time		0	2
F97	Low ambient temperature alarm (S1)	-58°F - 221°F	25°F	-20°F
F98	High ambient temperature alarm (S1)	-58°F - 221°F	120°F	110°F
F142	Address of the instrument on the RS-485 Network	1-247	1	1

**This is a standard setting; climates with extreme humidity may require more defrost times or longer fail-safe settings.*

****for any other parameters and setting please consult factory for more details and instructions***

Note: The other parameters not listed here are set up with default values. If you need details or instructions on these other parameters and settings, consult the TC-970E controller manual.

 All specifications within this publication subject to change without notice. © 2026 Master-Bilt Products, LLC. All rights reserved.

INSTALLATION

- The TC-970E controller should be mounted on a vertical panel, in a 29 mm x71 mm hole, and secured using the special bracket supplied.
- The temperature range allowed for correct operation is 0 to 60°C.
- Avoid places subject to strong vibrations, corrosive gases, excessive dirt, or humidity. The same recommendations apply to probes.
- Allow air to circulate through the cooling holes.
- The device is provided with screw terminal block to connect cables with a cross section up to 2.5 mm^2.
- Before connecting cables verify that the power supply complies with the device's requirements.
- Separate the probe cables from the power supply cables, from the outputs and the power connections.
- **Do not exceed the maximum current allowed on each relay, in case of heavier loads use a suitable external relay.**

  NOTE: Most controllers are already installed, this is only if your unit does not have a controller, or it has to be replaced.

PROBE CONNECTION

- The probes should be mounted with the bulb upwards to prevent damage due to casual liquid infiltration.
- It is recommended the thermostat probe be placed away from air streams to measure the average room temperature correctly.
- Place the defrost termination probe among the evaporator fans in the coldest place, (where most ice is formed) and far from heaters or from the warmest place during defrost to prevent premature defrost termination.

STARTING PROCEDURE

1. Check the temperature holding range against the control setting.

2. Check the defrost control system to see that all ice is removed from the coil during each defrost cycle.

3. Ensure Defrost terminates and System starts cooling again.

4. Reinstall pipe coverings for condensing units after installation if condensers are removed.

Installation and operating instructions are provided with each model and indicate a clearance of open at the top, 3 in. at the rear and 0 in. at each side.

 All specifications within this publication subject to change without notice. © 2026 Master-Bilt Products, LLC. All rights reserved.

FINAL CHECKLIST

A. *Check high-low pressure control settings.*
B. *Check operating pressure.*
C. *Check electrical requirements of units to supply voltage.*
D. *Check the setting of the thermostatic expansion valve for proper operation. Approx. 10°F superheat.*
E. *Check sight glass for proper refrigerant charge.*
F. *Check condensing unit for vibrating or rubbing tubing. Dampen and clamp as required.*
G. *All valves should be completely open counterclockwise.*
H. *Check the packing nuts on all service valves.*
I. *Replace all service valve caps and latch unit covers.*
J. *Check the refrigeration line for proper P-traps and proper locations.*
K. *Check the drain for proper P-traps and proper locations.*

 All specifications within this publication subject to change without notice. © 2026 Master-Bilt Products, LLC. All rights reserved.

DOOR PLASTIC (GASKET RETAINER) REPLACEMENT

Starting in corner, gently pull the rubber gasket away from the door plastic. With gasket removed, insert a flat-head screwdriver under the outside edge of the plastic, and gently pry up. At either end of the plastic run the screwdriver the complete length and width of the door rail. With the outside edge of the plastic released, push the plastic towards the glass to remove. To replace, insert the edge of the plastic into the inside door rail groove. Snap the outside edge of the plastic cover over the outside edge of the door rail.

DOOR GASKET REPLACEMENT

Remove the old gasket by starting in the corner, gently pulling gasket away from the plastic. To replace the gasket, remove the top and bottom door plastic, and slide the gasket up the two verticals. Slide the top and bottom plastic onto the gasket and replace the top and bottom plastic on the door rail. Tuck in the corners of the gasket with a flat-head screwdriver.

LED DRIVER REPLACEMENT, BEL/BEM-CU

For a **BEL/BEM-CU**, the LED Drivers are located inside the door mullions and can be accessed from the front of the door frame. Remove the door that hinges on the mullion where the ballast will be replaced. From the front of frame, remove contact plate & retainer by inserting a flat-head screwdriver under back edge of black contact plate retainer, and gently pull to unsnap retainer from the mullion. Repeat for the other side and remove the contact plate. With the ballast now exposed, remove the screw on the top end of the ballast. Loosen the screw on the bottom of the driver.

Disconnect all lead wires by separating the connectors. If cut, leave enough lead wire to re-connect the new driver with a wire nut. Insert the bottom of the new ballast in the punched tabs and re-install the top screw in the top end of the driver. Tighten both screws. Re-connect new driver's lead wires following the wiring diagrams provided.

DOOR HEATER REPLACEMENT

Remove door gasket and plastic. Remove the center side access plate located on the side of the door. The wiring for the door is done in the center side of the hinge rail. To remove the heater, unplug the solid lead wires: Black or Red, White, and Green/Yellow (ground). If the glass is heated, unplug the Black and White solid wires from the glass. Heater wire lies in the track on the back outside edge of door. Pull the heater out. Reverse instructions to replace the door heater. Plug in Black or Red lead wire from hinge pin to Black or Red lead wire from heater, White lead wire from hinge pin to White heater lead, and Green/Yellow lead from hinge pin to ground.
Note: If glass is heated, plug in Black and White lead wires coming off heater loom to Black and White lead wires from glass. Replace side access plate. Replace the door plastic and gasket.

NOTICE

The doors on these cabinets are Anti-Fog Glass so it is important to follow the information below when cleaning these doors. Failure to observe the details below in cleaning doors will void door supplier warranty.

- Do not use sealants, gaskets, or other materials containing silicone that can contaminate the coating.
- Do not use tape, glue, stickers, attachments, or magic markers on the anti-fog coating.
- Do not use razor blades or any other mechanical device to remove foreign residue or objects directly from the coated glass.
- Do not use abrasive cleaners or materials on the coated glass. Examples of these cleaners or materials include Ajax, Brillo, Comet, Scotch Brite, Steel Wool, and Soft Scrub.
- Do not use cleaners or materials on the coated glass that hinder the anti-fog performance by leaving residue or damaging the surface. Examples of these cleaners include: Armor All, Tilex, Bleach, Windex no-drip, Windex Wipes, Pledge, or any product containing silicone oils or waxes.
- Recommended cleaners include: Isopropyl Alcohol, Greased Lighting, Formula 409 Grease & Grime, Formula 409 Grease & Surface, Fantastic, Windex Vinegar, Windex Original, Now, Mean Green, or Mr. Clean (degreasing cleaners).
- Recommended cleaning is with a soft dry or slightly damp towel, or with one of the degreasing cleaners listed above.

 All specifications within this publication subject to change without notice. © 2026 Master-Bilt Products, LLC. All rights reserved.

SERVICE INSTRUCTIONS (Trouble Shooting Guide)

1. High head pressure and high back pressure:

   A. Condenser coil clogged or restricted.
   B. Condenser fan motor defective.

2. Low back pressure and low head pressure:

   A. Restriction in system.
   B. Refrigerant undercharged.
   C. Leak in system.

3. Pressures normal – cabinet warm:

   A. Coil blocked with frost or ice (see #4).
   B. Refrigerant undercharged.
   C. Control set too warm.
   D. Air screen disturbance.

4. Coil blocked with frost or ice:

   A. Defective temperature control.
   B. Time clock is not operating properly.
   C. Improper time clock setting.
   D. Ambient conditions above 75°F/55% RH.
   E. Defrost heater is not operating.
   E. P-trap in drain not installed.
   F. Doors aren't sealing when closed.
   G. Air screen disturbance.
   H. Evaporator fan motor defective.
   I. Low voltage.

5. Compressor starts and runs – but cycles on overload:

   A. Low voltage.
   B. Overload protector defective.
   C. High head pressure (see#1).

6. Compressor will not start – hums, but cycles on overload:

   A. Low voltage.
   B. Relay defective.
   C. Overload is defective.
   D. High head pressure (see #1).

7. Special service situations:

If moisture or liquid is observed around or under a Master-Bilt cabinet, an immediate investigation should be made by qualified personnel to determine the source of moisture or liquid. The investigation made should determine if the cabinet is malfunctioning or if there is a simple housekeeping problem.

Moisture or liquid around or under a cabinet is a potential slip/fall hazard for persons walking by or working in the general area of the cabinet. Any cabinet malfunction or housekeeping problem that creates a slip/fall hazard around or under a cabinet should be corrected immediately.

 All specifications within this publication subject to change without notice. © 2026 Master-Bilt Products, LLC. All rights reserved.

TECHNICIAN'S CONSIDERATIONS

Technicians should have an EPA 608 certification type 1 to work on this cabinet.

Technicians should exercise caution when disconnecting quick connects or opening refrigerant circuits.

Technicians should use ventilation fans anytime a refrigeration circuit is opened.

Technicians should survey the area for ignition sources before opening a refrigeration circuit.

Technicians should correct all nearby electrical faults and discharge all capacitors before opening a refrigeration circuit.

Technicians should avoid working in confined spaces with A3 refrigerants. Ventilation should be used if necessary.

Technicians should check the area for flammable refrigerants with an approved leak detector to find present refrigerant before starting work. This leak detection equipment should not be arcing or sparking. It should be intrinsically safe.

Technicians should have a fire extinguisher present during service and installation. A dry chemical or CO_2 fire extinguisher should be adjacent to the charging area.

No person carrying out work in relation to a REFRIGERATING SYSTEM which involves exposing any pipe work shall use any sources of ignition in such a manner that it may lead to the risk of fire or explosion. All possible ignition sources, including cigarette smoking, should be kept sufficiently far away from the site of installation, repairing, removing and disposal, during which refrigerant can possibly be released to the surrounding space. Prior to work taking place, the area around the equipment shall be surveyed to make sure that there are no flammable hazards or ignition risks. "No Smoking" signs shall be displayed.

Technicians should ensure that the area is in the open or that it is adequately ventilated before breaking into the system or conducting any hot work. A degree of ventilation shall continue during the period that the work is carried out. The ventilation should safely disperse any released refrigerant and preferably expel it externally into the atmosphere.

Where electrical components are being charged, they shall be fit for the purpose and to the correct specification. At all times, the manufacturer's maintenance and service guidelines shall be followed. If in doubt, consult the manufacturer's technical department for assistance.

The following checks shall be applied to installations using FLAMMABLE REFRIGERANTS:

a) The actual REFRIGERANT CHARGE is in accordance with the room size within which the refrigerant-containing parts are installed.

b) The ventilation machinery and outlets are operating adequately and are not obstructed.

c) If an indirect refrigerating circuit is being used, the secondary circuit shall be checked for the presence of refrigerant.

d) Marking to the equipment continues to be visible and legible. Markings and signs that are illegible shall be corrected.

e) Refrigerating pipes or components are installed in a position where they are unlikely to be exposed to any substance which may corrode refrigerant containing purpose and to the correct specification. At all times, the manufacturer's maintenance and service guidelines shall be followed. If in doubt, consult the manufacturer's technical department for assistance.

The following checks shall be applied to installations using FLAMMABLE REFRIGERANTS:

a) The actual REFRIGERANT CHARGE is in accordance with the room size within which the refrigerant containing parts are installed;

 All specifications within this publication subject to change without notice. © 2026 Master-Bilt Products, LLC. All rights reserved.

b) The ventilation machinery and outlets are operating adequately and are not obstructed;

c) If an indirect refrigerating circuit is being used, the secondary circuit shall be checked for the presence of refrigerant;

d) Marking to the equipment continues to be visible and legible. Markings and signs that are illegible shall be corrected;

e) Refrigerating pipe or components are installed in a position where they are unlikely to be exposed to any substance which may corrode refrigerant containing

Checks to electrical devices Repair and maintenance to electrical components shall include initial safety checks and component inspection procedures. If a fault exists that could compromise safety, then no electrical supply shall be connected to the circuit until it is satisfactorily dealt with. If the fault cannot be corrected immediately but it is necessary to continue operation, an adequate temporary solution shall be used. This shall be reported to the owner of the equipment, so all parties are advised.

Initial safety checks shall include:

a) The capacitors are discharged: this shall be done in a safe manner to avoid possibility of sparking.

b) That no live electrical components and wiring are exposed while charging, recovering or purging the system.

c) That there is continuity of earth bonding.

During repairs, Technicians should, to sealed components, all electrical supplies shall be disconnected from the equipment being worked upon prior to any removal of sealed covers, etc. If it is absolutely necessary to have an electrical supply to equipment during service, then a permanently operating form of leak detection shall be located at the most critical point

Technicians should check that cabling will not be subject to wear, corrosion, excessive pressure, vibration, sharp edges, or any other adverse environmental effects. The check shall also take into account the effects of aging or continual vibration from sources such as compressors or fans

Under no circumstances shall potential sources of ignition be used in the searching for or detection of refrigerant leaks. A halide torch (or any other detector using a naked flame) shall not be used.

The following leak detection methods are deemed acceptable for all refrigerant systems. Electronic leak detectors may be used to detect refrigerant leaks but, in the case of

FLAMMABLE REFRIGERANTS, the sensitivity might not be adequate or might need recalibration. (Detection equipment shall be calibrated in a refrigerant-free area.) Ensure that the detector is not a potential source of ignition and is suitable for the refrigerant used. Leak detection equipment shall be set at a percentage of the LFL of the refrigerant and shall be calibrated to the refrigerant employed, and the appropriate percentage of gas (25 % maximum) is confirmed.

 All specifications within this publication subject to change without notice. © 2026 Master-Bilt Products, LLC. All rights reserved.

Leak detection fluids are also suitable for use with most refrigerants but the use of detergents containing chlorine shall be avoided as the chlorine can react with the refrigerant and corrode the copper pipework.

NOTE Examples of leak detection fluids are

- Bubble method,
- Fluorescent method agents.

If a leak is suspected, all naked flames shall be removed/extinguished.

If a leakage of refrigerant is found which requires brazing, all the refrigerant shall be recovered from the system. Removal of refrigerant shall be according to Clause 101.DVS.9 in UL60335-2-89.

MASTER-BILT PART NUMBERS

The table below gives Master-Bilt part numbers for use when ordering replacement parts for your **BEL/BEM-CU** cases.

Description	BEL (Low Temp)	BEM (Med Temp)
Evaporator Coil	*Consult Factory*	
Defrost Heater	17-09629 BEL2/4 103130 BEL3/5	N/A
Electronic Control	231228	231228
Box Sensor	231229	231229
Evaporator Sensor	231230	231230
Evaporator Fan Motor	158919	158919
Standard Shelf Solid Shelf	231258	231258
Door Frame	*Consult Factory*	
Standard Door (Black)	100972	100972
LED Driver		
LED Mullion light bar	173668	173668
Lamp Left Side light bar	173667	173667
Lamp Right Side light bar	173672	173672
Door Gasket	37-01385 (30”) 37-01386 (24”)	37-01385 (30”) 37-01386 (24”)
Torque-Master (Black)	000105	000105
Torque Rod	35-01840	35-01840
Top Hinge Pin	35-01842	35-01842
Door Frame Heaters	*Consult Factory*	

 All specifications within this publication subject to change without notice. © 2026 Master-Bilt Products, LLC. All rights reserved.

SALE AND DISPOSAL

OWNER RESPONSIBILITY

If you sell or give away your Master-Bilt cabinet, you must make sure that all safety labels and the Installation - Service Manual are included with it. If you need replacement labels or manuals, Master-Bilt will provide them free. Contact the

customer service department at Master-Bilt at (800) 684-8988.

The customer service department at Master-Bilt should be contacted at the time of sale or disposal of your cabinet so records may be kept of its new location.

If you sell or give away your Master-Bilt cabinet and you evacuate the refrigerant charge before shipment, Master-Bilt recommends that the refrigerant charge be properly recovered in compliance with section 608 of the Clean Air Act effective November 1995 and in accordance with all applicable local, regional, or national standards.

Decommissioning:

Before carrying out this procedure, it is essential that the technician is completely familiar with the equipment and all its detail: It is recommended good practice that all refrigerants are recovered safely. Prior to the task being carried out, an oil and refrigerant sample shall be taken in case analysis is required prior to re-use of recovered refrigerant. It is essential that electrical power is available before the task commences.

a) Become familiar with the equipment and its operation.

b) Isolate the system electrically.

c) Before attempting the procedure, ensure that:

   i) Mechanical handling equipment is available, if required, for handling refrigerant cylinders.
   ii) All personal protective equipment is available and being used correctly.
   iii) The recovery process is supervised at all times by a competent person.
   iv) Recovery equipment and cylinders conform to the appropriate standards.

d) Pump down refrigerant system, if possible.

e) If a vacuum is not possible, make a manifold so that refrigerant can be removed from various parts of the system.

f) Make sure that cylinder is situated on the scales before recovery takes place.

g) Start the recovery machine and operate in accordance with instructions.

h) Do not overfill cylinders (no more than 80 % volume liquid charge).

i) Do not exceed the maximum working pressure of the cylinder, even temporarily.

j) When the cylinders have been filled correctly and the process completed, make sure that the cylinders and the equipment are removed from site promptly and all isolation valves on the equipment are closed off.

k) Recovered refrigerant shall not be charged into another REFRIGERATING SYSTEM unless it has been cleaned and checked.

 All specifications within this publication subject to change without notice. © 2026 Master-Bilt Products, LLC. All rights reserved.

Labelling
Equipment shall be labelled stating that it has been de-commissioned and emptied of refrigerant. The label shall be dated and signed. For appliances containing FLAMMABLE REFRIGERANTS, ensure that there are labels on the equipment stating the equipment contains FLAMMABLE REFRIGERANT.

Recovery
When removing refrigerant from a system, either for servicing or decommissioning, it is recommended good practice that all refrigerants are removed safely.

When transferring refrigerant into cylinders, ensure that only appropriate refrigerant recovery cylinders are employed. Ensure that the correct number of cylinders for holding the total system charge is available. **All** cylinders to be used are designated for the recovered refrigerant and labelled for that refrigerant (i.e., special cylinders for the recovery of refrigerant). Cylinders shall be complete with pressure-relief valve and associated shut-off valves in good working order. Empty recovery cylinders are evacuated and, if possible, cooled before recovery occurs.

The recovery equipment shall be in good working order with a set of instructions concerning the equipment that is at hand and shall be suitable for the recovery of all appropriate refrigerants including, when applicable, FLAMMABLE REFRIGERANTS. In addition, a set of calibrated weighing scales shall be available and in good working order. Hoses shall be complete with leak-free disconnect couplings and in good condition.
Before using the recovery machine, check that it is in satisfactory working order, has been properly maintained and that any associated electrical components are sealed to prevent ignition in the event of a refrigerant release. Consult manufacturer if in doubt. The recovered refrigerant shall be returned to the refrigerant supplier in the correct recovery cylinder, and the relevant waste transfer note arranged. Do not mix refrigerants in recovery units and especially not in cylinders. If compressors or compressor oils are to be removed, ensure that they have been evacuated to an acceptable level to make certain that FLAMMABLE REFRIGERANT does not remain within the lubricant. The evacuation process shall be carried out prior to returning the compressor to the suppliers. Only electric heating to the compressor body shall be employed to accelerate this process. When oil is drained from a system, it shall be carried out safe

 All specifications within this publication subject to change without notice. © 2026 Master-Bilt Products, LLC. All rights reserved.

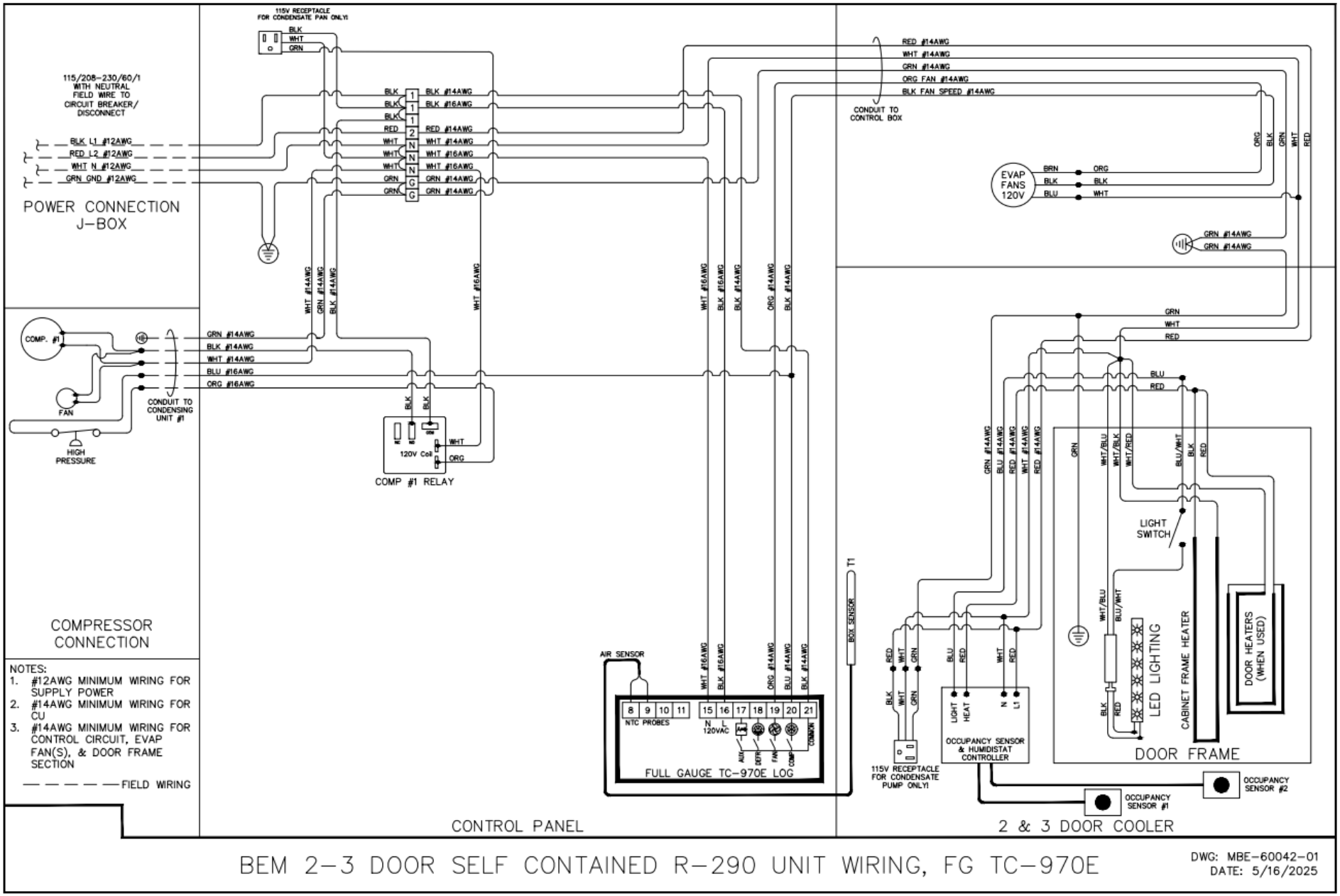

BEM 2-3 DOOR SELF CONTAINED R-290 UNIT WIRING, FG TC-970E

DWG: MBE-60042-01
DATE: 5/16/2025

 All specifications within this publication subject to change without notice. © 2026 Master-Bilt Products, LLC. All rights reserved.

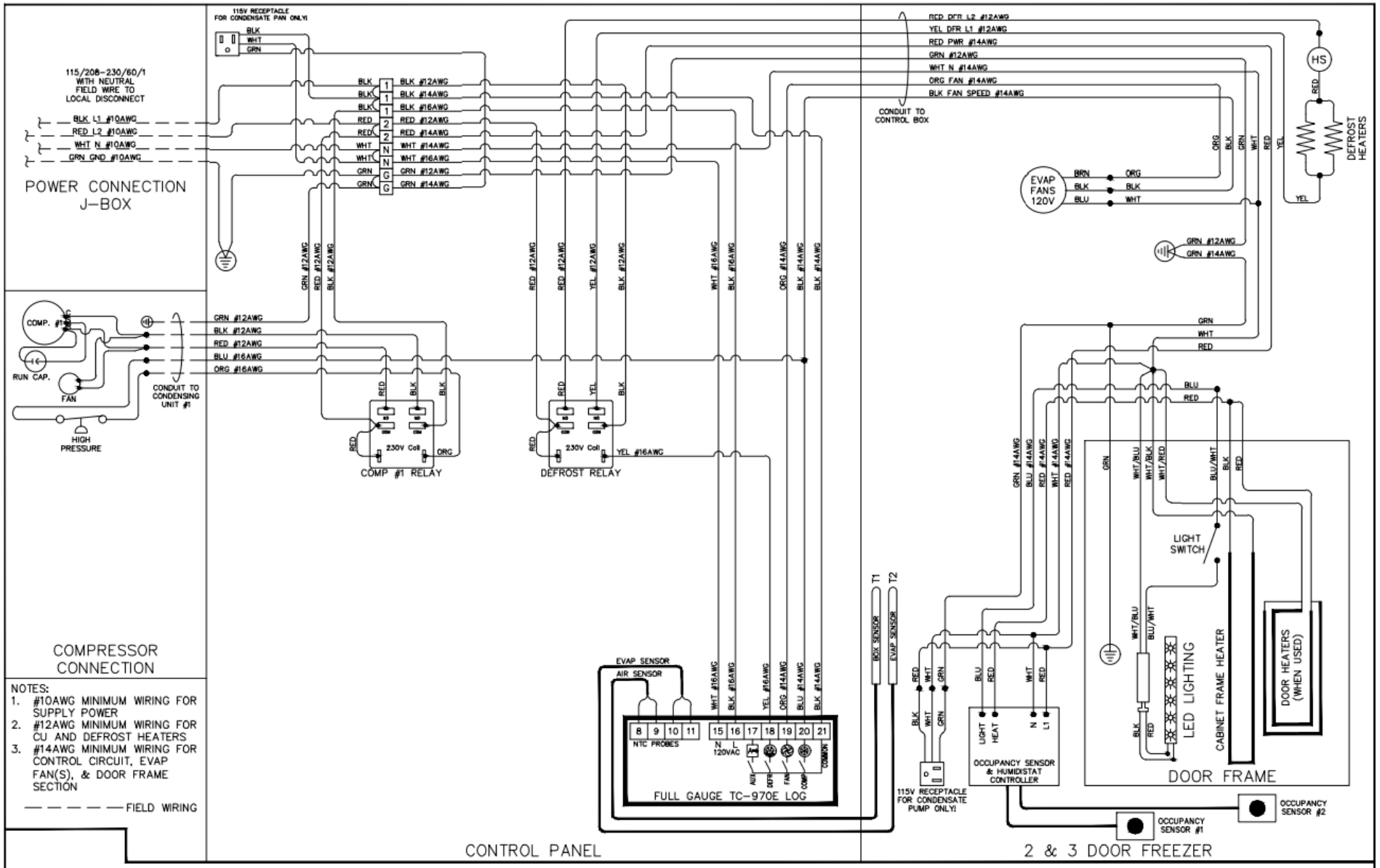

BEL 2 DOOR SELF CONTAINED R-290 UNIT WIRING, FG TC-970E

DWG: MBE-60049-00
DATE: 5/27/2025

 All specifications within this publication subject to change without notice. © 2026 Master-Bilt Products, LLC. All rights reserved.

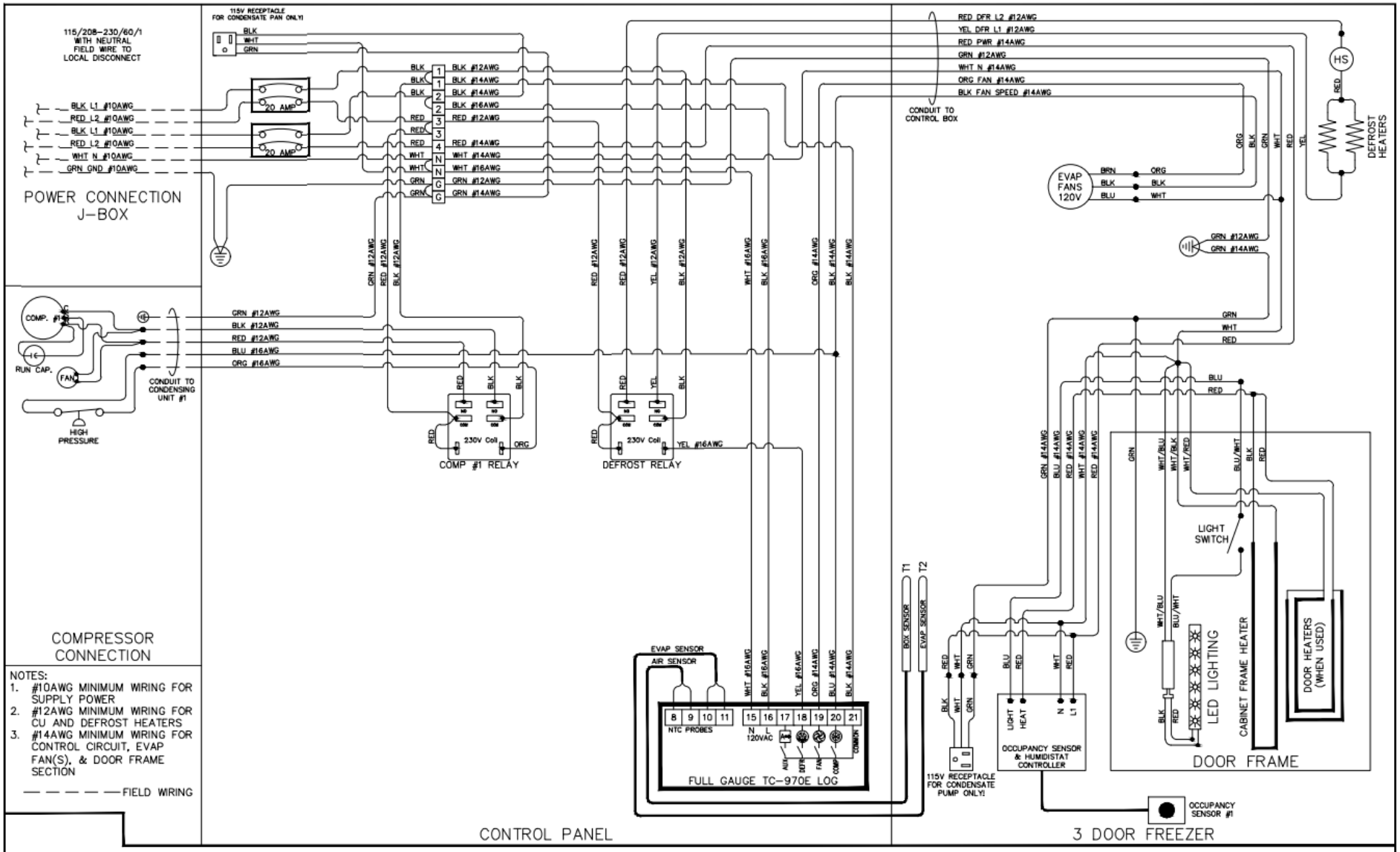

BEL 3 DOOR SELF CONTAINED R-290 UNIT WIRING, FG TC-970E

DWG: MBE-60040-01
DATE: 5/27/2025

 All specifications within this publication subject to change without notice. © 2026 Master-Bilt Products, LLC. All rights reserved.

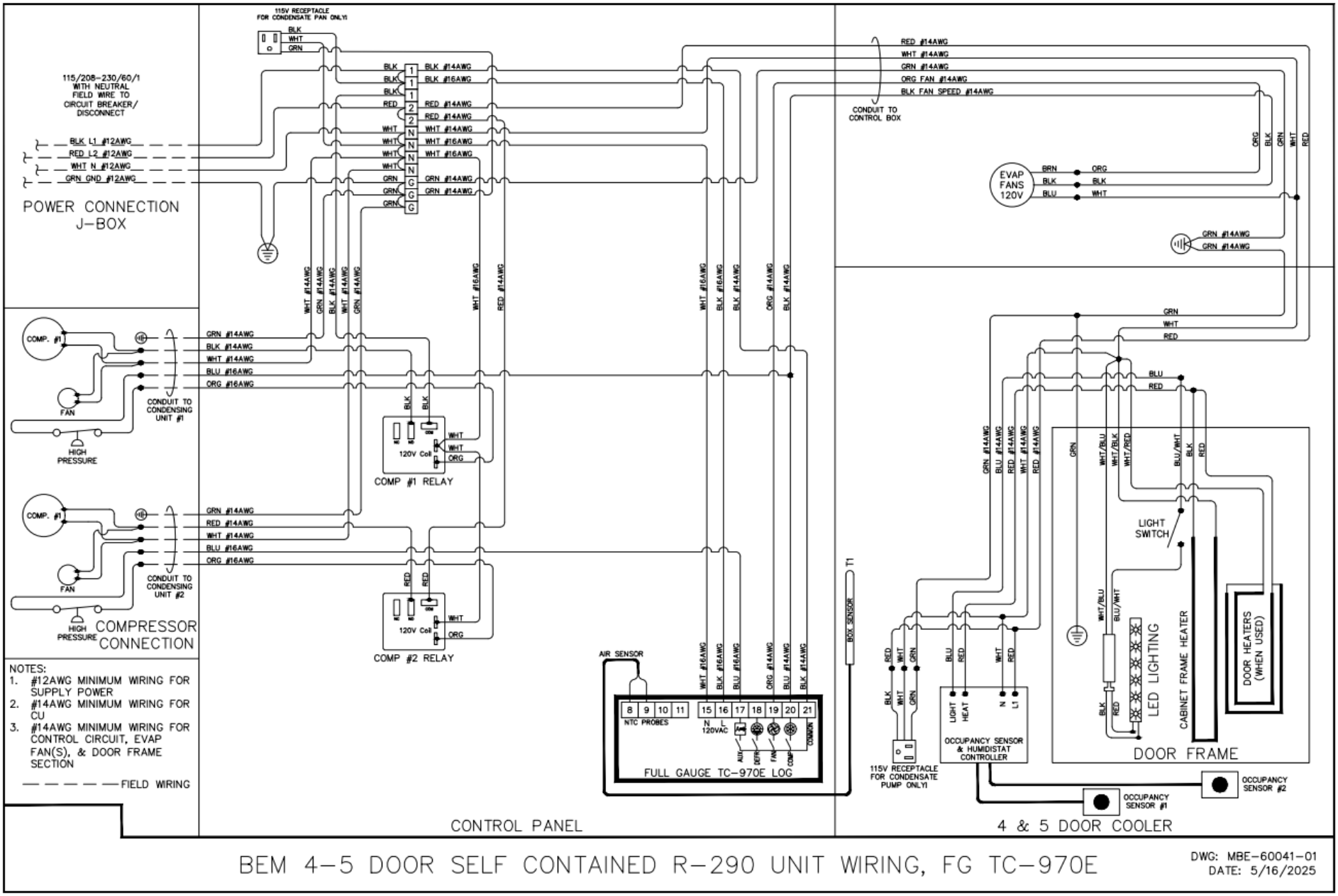

BEM 4-5 DOOR SELF CONTAINED R-290 UNIT WIRING, FG TC-970E

DWG: MBE-60041-01
DATE: 5/16/2025

 All specifications within this publication subject to change without notice. © 2026 Master-Bilt Products, LLC. All rights reserved.

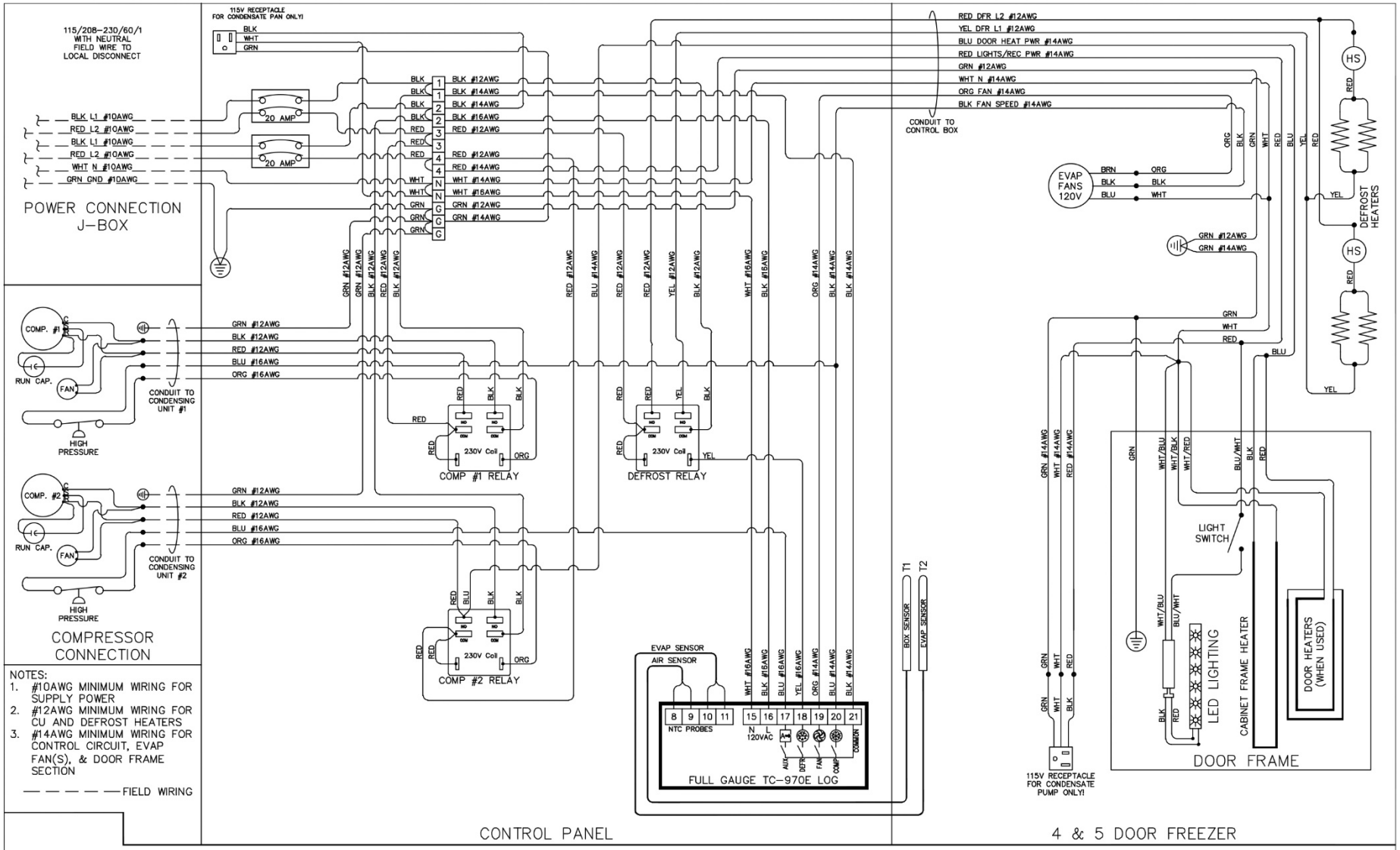

BEL 4-5 DOOR SELF CONTAINED R-290 UNIT WIRING, FG TC-970E

DWG: MBE-60039-02
DATE: 12/1/2025

 All specifications within this publication subject to change without notice. © 2026 Master-Bilt Products, LLC. All rights reserved.

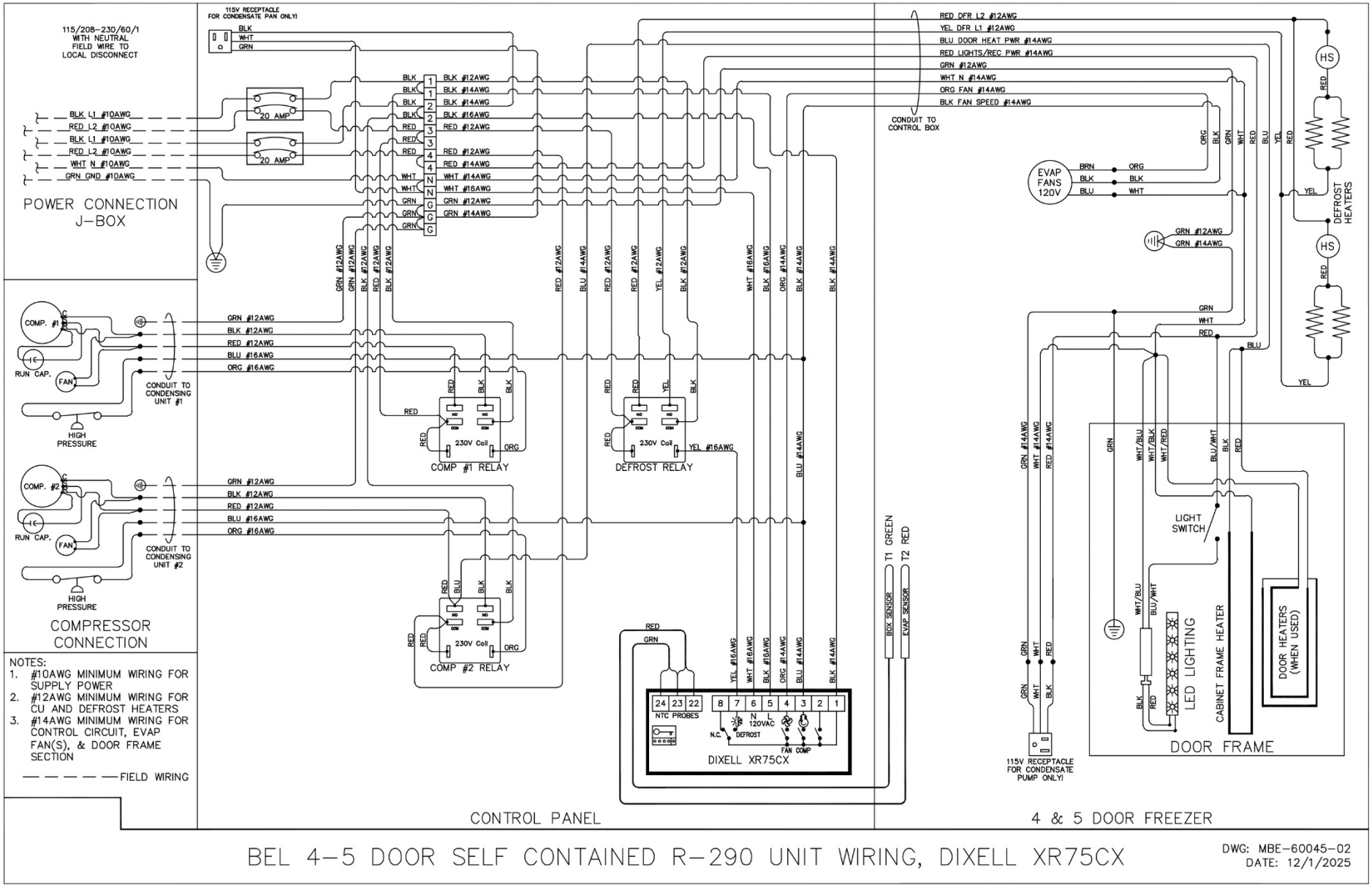

BEL 4-5 DOOR SELF CONTAINED R-290 UNIT WIRING, DIXELL XR75CX

DWG: MBE-60045-02
DATE: 12/1/2025

 All specifications within this publication subject to change without notice. © 2026 Master-Bilt Products, LLC. All rights reserved.

RSG
Refrigerated Solutions Group®

Master-Bilt
908 Highway 15 North
New Albany, MS 38652

800-647-1284 Sales
800-684-8988 Parts/Service