PH-Series

Specifications, Installation, Operation Service & Spare Parts Manual

calcana.com
Calgary, Alberta, Canada

PH-SERIES Specifications, Installation, Operation Service and Spare Parts Manual

Gas Fired Outdoor Infrared Patio Heater/Gas-Fired Infrared Patio Heater
Vented Radiant Tube Heater
Gravity Vented Wall Furnace
For Either Indoor or Outdoor Installation
For Industrial, Commercial, and Residential Patio and Restaurant Applications.

⚠ WARNING: PH-HO SERIES/HIGH OUTPUT MODELS are for Outdoor Use Only

⚠ WARNING: Improper installation, adjustment, alteration, service, or maintenance will void the product warranty and can cause property damage, injury, or death. Read (refer to) the installation operating and maintenance instructions thoroughly before installing or servicing this equipment. For assistance or additional information consult a qualified installer, service agency or the gas supplier.

⚠ WARNING: If the information in these instructions is not followed exactly, a fire or explosion may result; causing property damage, personal injury, or loss of life.

Do not store or use gasoline or other flammable vapors and liquids in the vicinity of this or any other appliance.

⚠ DANGER: WHAT TO DO IF YOU SMELL GAS:

1) **Extinguish any open flame.**
2) **DO NOT try to light any appliance.**
3) **DO NOT use or touch any electrical switches.**
4) **DO NOT use any phone in your building.**
5) **Turn off gas.**
6) **Open Windows.**
7) **Leave the building.**
8) **Immediately call your gas supplier from a neighbor's phone or after you have left the building. Follow the gas supplier's instructions.**
9) **If you cannot reach your gas supplier, call the fire department.**

Installation and service must be performed by a qualified installer, service agency or the gas supplier.

⚠ WARNING: Heat exchanger surface is hot. Do not touch the surface or severe burns will result. Combustible material or articles should not be placed on or near the heater. Observe clearance to combustibles as noted on heater and in this manual.

INSTALLER: Leave this manual with the appliance.
CONSUMER: Retain this manual for future reference.

Calcana Industries Ltd.
6060 86 Ave SE
Calgary, Alberta, T2C 4L7
403-777-0808 | 800-778-6729

Printed in Canada
© 2025 Calcana Industries Ltd.
Rev 1 08/15

CALCANA PH-SERIES HEATERS ARE CATEGORY III HEATERS.

WHEN AN EXISTING CATEGORY I HEATER IS REMOVED OR REPLACED, THE ORIGINAL VENTING SYSTEM MAY NO LONGER BE SIZED TO PROPERLY VENT THE ATTACHED APPLIANCES.

The effects of an improperly sized venting system can include but are not limited to the formation of condensate, leakage, spillage, etc. The following test procedure is required:

⚠ WARNING CARBON MONOXIDE POISONING HAZARD

Failure to follow the steps outlined below for each appliance connected to the venting system being placed into operation could result in carbon monoxide poisoning or death. The following steps shall be followed for each appliance connected to the venting system being placed into operation, while all other appliances connected to the venting system are not in operation:

1) Seal any unused openings in the venting system.
2) Inspect the venting system for proper size and horizontal pitch, as required in the **National Fuel Gas Code, ANSI Z223.1/NFPA 54** or the **Natural Gas and Propane Installation Code, CSA B149.1** and these instructions. Determine that there is no blockage or restriction, leakage, corrosion, and other deficiencies which could cause an unsafe condition.
3) As far as practical, close all building doors and windows and all doors between the space in which the appliance(s) connected to the venting system are located and other spaces of the building.
4) Close fireplace dampers.
5) Turn on clothes dryers and any appliance not connected to the venting system. Turn on any exhaust fans, such as range hoods and bathroom exhausts, so they are operating at maximum speed. Do not operate a summer exhaust fan.
6) Follow the lighting instructions. Place the appliance being inspected into operation. Adjust the thermostat so the appliance is operating continuously.
7) Test for spillage from draft hood equipped appliances at the draft hood relief opening after 5 minutes of main burner operation. Use the flame of a match or candle.
8) If improper venting is observed during any of the above tests, the venting system must be corrected in accordance with the **National Fuel Gas Code, ANSI Z223.1/NFPA 54** and/or **Natural Gas and Propane Installation Code, CSA B149.1**.
9) After it has been determined that each appliance connected to the venting system properly vents when tested as outlined above, return doors, windows, exhaust fans, fireplace dampers and any other gas-fired burning appliances to their previous conditions of use.

1.0 TABLE OF CONTENTS

2.0 SAFETY AND OPERATING INSTRUCTIONS ---------- 1
3.0 OWNERS RESPONSIBILITY ---------- 2
4.0 INSTALLER RESPONSIBILITY ---------- 4
5.0 CODE COMPLIANCE ---------- 6
6.0 SPECIFICATIONS ---------- 7
7.0 DIMENSIONS ---------- 9
8.0 INSTALLATION CLEARANCES AND CLEARANCE TO COMBUSTIBLES ---------- 10
9.0 PRE-INSTALLATION INSPECTION ---------- 13
10.0 PACKAGING CONTENTS & PART DESCRIPTIONS --- 14
A. PH-40 HO & PH-75 HO, HIGH OUTPUT MODELS ---------- 14
B. PH-40A, STANDARD OUTPUT MODEL ---------- 15
C. PH-50A, STANDARD OUTPUT MODEL ---------- 16
D. PH-75A, STANDARD OUTPUT MODEL ---------- 17
E. SIDE WALL VENT KIT 3" (7.62 CM) (OPTIONAL) ---------- 18
F. 90° ELBOW PACKAGE (OPTIONAL) ---------- 18
G. 180° U-BEND PACKAGE (OPTIONAL) ---------- 18
11.0 INSTALLATION ---------- 19
11.1 PLANNING ---------- 19
12.0 SUSPENSION OF HEATER ---------- 20
A. RIGID MOUNTING (RECOMMENDED) ---------- 21
B. CHAIN MOUNTING ---------- 22
13.0 ASSEMBLY OF COMPONENTS ---------- 23
13.1 GENERAL INSTRUCTIONS ---------- 23
A. INSTALLATION WITH CHAINS, BRACKETS OR OTHER RIGID HARDWARE ---------- 23
B. OTHER INSTALLATIONS SUCH AS POST AND TRACK ---------- 24
13.2 COMPONENT ASSEMBLY ---------- 25
A. JOINT HANGER TO REFLECTOR ---------- 25
B. CLAMP COUPLER ---------- 25
C. END CAP TO REFLECTOR ---------- 26
D. EGG CRATE GRILLE INSTALLATION ---------- 26
14.0 ASSEMBLY OVERVIEW ---------- 27
A. PH-40A, PH-40 HO & PH-75 HO ASSEMBLY ---------- 27
B. PH-50A ASSEMBLY ---------- 27
C. PH-75A ASSEMBLY ---------- 28
D. 90° ELBOW KIT (PH-50A & PH-75A MODELS) ---------- 29
E. 180° U-BEND KIT (PH-50A & PH-75A MODELS) ---------- 29
15.0 VENTING REQUIREMENTS ---------- 30
15.1 UNVENTED APPLICATIONS (ALL MODELS) ---------- 30
15.2 FOR UNVENTED INSTALLATIONS IN SEMI-ENCLOSED APPLICATIONS (ALL MODELS) ---------- 31
15.3 FOR VENTED INSTALLATIONS (PH-A SERIES/STANDARD OUTPUT MODELS ONLY) ---------- 32
16.0 VENTING PH-A/STANDARD OUTPUT MODELS ------ 33
16.1 HORIZONTAL AND VERTICAL VENTING APPLICATIONS 34
A. HORIZONTAL VENTING: SINGLE UNIT ---------- 35
B. ROOF EXHAUST: SINGLE UNIT ---------- 37
C. ROOF EXHAUST: TWO OR MORE UNITS ---------- 38
17.0 GAS PIPING ---------- 39
18.0 GAS CONNECTION ---------- 40
A. HARD PIPE ---------- 40
B. FLEX CONNECTOR ---------- 40
19.0 GAS INPUT RATE ---------- 42
20.0 ELECTRICAL CONNECTION ---------- 43
20.1 ELECTRICAL CONNECTION 120 VOLT ---------- 44
20.2 ELECTRICAL CONNECTION 24 VOLT ---------- 45
21.0 WIRING DIAGRAM ---------- 46
21.1 PH SERIES 120 VOLT WIRING DIAGRAM ---------- 46
21.2 PH SERIES 24 VOLT WIRING DIAGRAM ---------- 47
22.0 INITIAL START-UP ---------- 48
23.0 GAS VALVES ---------- 49
23.1 GAS VALVES, SIGMA SIT 845 MODULATING ---------- 49
23.2 GAS VALVES, SIGMA SIT 845 - MANIFOLD ADJUSTMENT AND VERIFICATION PROCEDURE ---------- 50
24.0 FUEL CONVERSION ---------- 52
24.1 CONVERSION KIT FOR VARIABLE INPUT GAS VALVES -- 52
24.2 EXAMPLE OF CONVERSION KIT LABEL ---------- 53
25.0 MAINTENANCE ---------- 54
26.0 SEQUENCE OPERATION ---------- 55
26.1 DESCRIPTION OF 3-TRY DIRECT SPARK IGNITION -------- 55
26.2 OPERATIONS ---------- 55
27.0 TROUBLESHOOTING ---------- 56
A. NO POWER TO HEATER ---------- 56
B. ELECTRICITY AND GAS TO HEATER, BUT STILL INOPERATIVE 56
C. CHECK CONTROL BOARD ---------- 58
28.0 PARTS ---------- 60
28.1 BURNER HEAD AND RELATED PARTS ---------- 60
28.2 REFLECTOR AND TUBE PARTS ---------- 61
28.3 PARTS LIST ---------- 62
A. REPLACEMENT BURNER HEADS AND HEATERS ---------- 62
B. BURNER HEAD COMPONENTS ---------- 62
C. TUBE COMPONENTS ---------- 63
D. REFLECTOR COMPONENTS ---------- 63
29.0 WARRANTY ---------- 64

TABLE OF FIGURES

Figure 1. EQUIPMENT DIMENSION 9
Figure 2. OUTDOOR EXHAUST END CLEARANCE TO STRUCTURE 11
Figure 3. OUTDOOR EXHAUST END TO EXHAUST END CLEARANCE (RECOMMENDED) 11
Figure 4. OUTDOOR EXHAUST END TO BURNER HEAD END CLEARANCE (PARALLEL) 11
Figure 5. OUTDOOR EXHAUST END CLEARANCE FOR VENTED APPLICATIONS (THROUGH ROOF) 11
Figure 6. STANDARD REFLECTOR CLEARANCE 12
Figure 7. 25° TO 45° TILT CLEARANCE 12
Figure 8. PH-40 HO & PH-75 HO PACKAGE CONTENTS 14
Figure 9. PH-40A PACKAGE CONTENTS 15
Figure 10. PH-50A PACKAGE CONTENTS 16
Figure 11. PH-75A PACKAGE CONTENTS 17
Figure 12. 3” (7.62 cm) SIDE WALL VENT KIT PACKAGE CONTENTS 18
Figure 13. 90° ELBOW PACKAGE CONTENTS 18
Figure 14. 180° U-BEND PACKAGE CONTENTS 18
Figure 15. CEILING MOUNT RIGID INSTALLATION 21
Figure 16. WALL MOUNT RIGID INSTALLATION 21
Figure 17. EXAMPLE CHAIN SUSPENSION DETAILS 22
Figure 18. TYPICAL CHAIN INSTALLATION 22
Figure 19. JOINT HANGER INSTALLATION 25
Figure 20. CLAMP COUPLER INSTALLATION 25
Figure 21. END CAP INSTALLATION 26
Figure 22. EGG CRATE GRILLE INSTALLATION 26
Figure 23. PH-50A ASSEMBLY 27
Figure 24. PH-75A ASSEMBLY 28
Figure 25. 90° ELBOW KIT INSTALLATION 29
Figure 26. 180° U-BEND KIT INSTALLATION 29
Figure 27. 4” SIDE WALL VENTING, SINGLE UNIT 35
Figure 28. 3” SIDE WALL VENTING, SINGLE UNIT 36
Figure 29. VERTICAL VENTING, SINGLE UNIT 37
Figure 30. TWO OR MORE UNITS INTO A COMMON CHIMNEY – SIDE VIEW 38
Figure 31. TWO OR MORE UNITS INTO A COMMON CHIMNEY – TOP VIEW 38
Figure 32. HARD PIPE INSTALLATION 40
Figure 33. GAS LINE CONNECTION WITH CERTIFIED FLEXIBLE GAS CONNECTION 41
Figure 34. ELECTRICAL CONNECTIONS 120 VOLT 44
Figure 35. ELECTRICAL CONNECTIONS 24 VOLT 45
Figure 36. WIRING DIAGRAM 120 VOLT 46
Figure 37. WIRING DIAGRAM 24 VOLT 47
Figure 38. GAS VALVE & PRESSURE REGULATOR, SIGMA SIT 845 MODULATING 49
Figure 39. FLAME SENSOR CURRENT CHECK 57
Figure 40. PROPER ELECTRODE LOCATION 58
Figure 41. BURNER HEAD PARTS 60
Figure 42. REFLECTOR AND TUBE PARTS 61

2.0 SAFETY AND OPERATING INSTRUCTIONS

⚠ WARNING

Failure to follow these instructions may cause personal injury, property damage or death. Read the installation, operating and maintenance instructions thoroughly before installing or servicing this equipment

SAFETY INSTRUCTIONS READ BEFORE OPERATING

A) This gas heater does not have a pilot. It is equipped with an ignition device which automatically lights the burner. DO NOT try to light the burner with a match or flame.

B) BEFORE OPERATING, smell all around the heater area for gas. Be sure to smell next to the floor because some gas is heavier than air and will settle on the floor.

WHAT TO DO IF YOU SMELL GAS

- **Do not try to operate the heater.**
- **Do not touch any electric switch; do not use any phone in your building.**
- **Immediately call your gas supplier from a neighbor's phone. Follow the gas supplier's instructions.**
- **If you cannot reach your gas supplier, call the fire department.**

C) Use only your hand to turn the gas valve handle. Never use tools. If handle will not turn by hand, do not try to repair it, call a qualified service technician. Force or attempted repair may result in a fire or explosion.

D) Do not use this heater if any part has been underwater. Immediately call a qualified service technician to inspect the heater and to replace any part of the control system which has been underwater.

OPERATING INSTRUCTIONS

- **STOP! Read the safety Instructions on this label.**
- **Open the manual gas valve in the heater supply line.**
- **Turn on electric power to the heater.**
- **Set the thermostat to the desired setting or set the toggle switch on the heater controller to the ON position.**
- **This heater is equipped with an ignition device, which automatically lights the burner. Do not try to light the burner with a match or flame.**
- **If the heater will not operate, follow instructions "To Turn Off Gas to Heater" and call your service technician or gas supplier.**

TO TURN OFF THE GAS TO HEATER

- **Set the thermostat to the lowest setting or the toggle switch on the heater controller to the OFF position.**
- **Turn off electric power to the heater if service is to be performed.**
- **Turn off the manual gas valve in the heater supply line.**
- **Wait 5 minutes before attempting to relight heater.**

3.0 OWNERS RESPONSIBILITY

Thank you for purchasing our product. We have designed this unit to provide you with years of trouble-free heating enjoyment.

READ THIS MANUAL IN ITS ENTIRETY! If you do not understand any of the safety or hazardous warnings contained in this manual, or have questions or concerns about the installation, operation, maintenance or service of this heater, or any other questions or concerns relating to this heater, you MUST CALL THE FACTORY at the telephone number noted on the front cover of this manual or as detailed on the rating plate on the heater before operating this heater.

Store this manual in a location near the heater, for future reference. Ensure installation is performed by qualified, licensed contractors in the required field of work. If in doubt, DO NOT allow the unit to be installed.

Failure to have qualified, licensed contractors in the required field of work complete installation can result in property damage, injury or death and will void the product warranty.

DO NOT park vehicles or place combustible objects close to the heater other than specified on the Clearance to Combustible chart located in this manual and on the heater. Failure to observe the clearance to combustibles can result in property damage, injury or death.

IMPORTANT NOTICE: The installation portion of these instructions are for the use of qualified individuals specially trained, licensed, and experienced in the installation of this type of equipment and related system components.

NOTE: - *The words "shall" or "must" indicate a requirement which is essential to satisfactory and safe performance.*

⚠ **GENERAL HAZARD WARNING:** The heater and related gas piping, fitting and wiring must be installed by individuals or firms qualified, licensed, specially trained and experienced in installation of this type of equipment and related system components.

Only persons who can understand and follow the instructions shall install or service this heater.

Persons not qualified shall not install this equipment nor interpret these instructions.

Failure to comply with the precautions and instructions provided with this heater can result in death, serious bodily injury and property loss or damage from hazards of fire, explosion, burn, asphyxiation, carbon monoxide poisoning, falling objects or electrical shock.

⚠ **WARNING:** Installation and repair should be done by a qualified service person. The heater should be inspected before use and at least annually by a qualified service person and prior to heating season. Heaters used in dusty locations or by salt water will require maintenance on a more regular basis and more frequent cleaning may be required as necessary. It is imperative that the control compartments, burner(s) and circulating air passageways of the appliance be kept clean. Periodic examination of the venting system is to be performed.

No one should work on a heater unless they are a licensed/qualified gas fitter or contractor. For all repairs, parts MUST originate from the manufacturer of this heater in order not to void CGA/AGA certification. Safety devices are not allowed to be rendered inoperative and left unattended as this action can cause property damage, injury, or death. Failure to do so will void the product warranty.

⚠ **WARNING:** Improper installation, adjustment, alteration, servicing, or maintenance can cause property damage, injury, or death and will void the product warranty.

⚠ **WARNING:** Children and adults should be alerted to the hazards of high surface temperatures and should stay away to avoid burns or clothing ignition.

Young children should be carefully supervised when they are in the same place as the heater.

Clothing or other flammable materials should not be hung from the heater or placed on or near the heater.

Any safety screen, guard or other protective device removed for servicing a heater must be replaced prior to operating the heater.

⚠ **WARNING:** PH-HO SERIES/HIGH OUTPUT MODELS ONLY: These appliances shall be used only outdoors in a well-ventilated space and shall not be used in a building, garage, or any other enclosed area.

IMPORTANT NOTICE: Do not use this appliance if any part has been under water. Immediately call a qualified service technician to inspect the appliance and to replace any part of the control system and any gas control which has been underwater.

IMPORTANT NOTICE: This heater is not to be used as a construction heater to supply heat to an unfinished building during the finishing phases of construction. This practice exposes the unit to an abnormally corrosive atmosphere from sources such as paint, varnish and adhesives, which can lead to premature radiant exchanger tube or vent failure. The practice also allows foreign materials such as sawdust or sheet rock dust to enter the combustion blower, burner, heat exchanger and vent system, resulting in shorter life of the unit.

Use of the heater as a construction heater will void the warranty.

⚠ **WARNING: SEE PAGES 30 TO 32 FOR VENTILATION REQUIREMENTS FOR THIS HEATER. MAKE SURE YOU HAVE THE CORRECT MODEL FOR THE INTENDED APPLICATION. IF IN DOUBT CONTACT THE FACTORY FOR DETAILS PRIOR TO INSTALLATION OR OPERATION.**

4.0 INSTALLER RESPONSIBILITY

⚠ WARNING

FIRE OR EXPLOSION HAZARD

The heater and related gas piping and wiring must be installed only by individuals or firms that are well qualified and licensed in the required field of work.

Read and understand this manual in its entirety BEFORE you install this heater. If you have any questions, call your local representative. Verify that the fuel on the installation site is the same as what is required for this heater. Check the heater for damage or missing parts. If damage has occurred, notify the carrier or point of purchase at once for reconciliation of damaged goods. Calcana is not responsible for transit damage. Do not install if the heater is damaged.

If you do not understand any of the safety or hazardous warnings contained in this manual, or have questions or concerns about the installation, operation, maintenance or service of this heater, or any other questions or concerns relating to this heater, you MUST CALL THE FACTORY at the telephone number on the front cover of this manual or as detailed on the rating plate on the heater before operating this heater.

Verify that model, input and length is what was ordered and is appropriate for installation. High Output models shall only be used outdoors in a well-ventilated space and shall not be used in a building, garage, or any other enclosed area (see “VENTING REQUIREMENTS”).

Installation shall be in accordance with local codes (see “CODE COMPLIANCE”).

If installation requires tilting, DO NOT over tilt the unit. Units are certified for installations up to 45°; however, the maximum recommended tilt is 25°.

Install the unit according to the Clearance to Combustibles for that heater model and type of installation. Ensure that clearances are maintained from vehicles parked or combustible objects below or in front of heater. Failure to do so could result in property damage, injury or death.

Ensure the unit is adequately suspended from the structure, ceiling or roof. Select a hanging location that has adequate strength to support the heater.

Ensure there is adequate clearance around air openings into the combustion chamber, clearance from combustible material, provisions for accessibility and for combustion and ventilation air supply.

WARNING: Do not render safety devices inoperable. Ensure the gas line and/or service have adequate capacity for the increased load of the heater or heaters.

Check line and manifold pressure with a manometer to confirm unit is set according to the specification on the rating plate. Perform checks with all gas-fired appliances operating per the instructions in this manual.

Provide adequate accessibility clearances for servicing.

This heater requires fresh air for safe operation and must be installed so there are provisions for adequate combustion and ventilation air. If installed in an enclosed or confined space, make sure the model of heater can be installed and attached to either a sidewall or roof vent. PH-A Series/Standard Output models can be installed in this fashion.

⚠ WARNING

In vented applications, PH-A Series/Standard Output heaters must not be connected to a chimney flue serving a separate solid-fuel burning appliance. These models must only be installed with the exhaust venting that they are certified for. If you are installing a PH-A Series/Standard Output unit indoors, it must be vented either with a sidewall vent kit (pin #800208), or via a certified "B" vent system through the roof. For side wall applications, ensure the vent cap is past the eave. See section titled "VENTING PH-A/STANDARD OUTPUT MODELS" for details.

PH-HO SERIES/HIGH OUTPUT UNITS ARE FOR OUTDOOR APPLICATIONS ONLY AND MUST NOT BE CONNECTED TO VENTING. See section titled "VENTING REQUIREMENTS" for details.

Ensure the units are operating as quiet and efficient as possible before leaving the job site and instruct owner/s on the safe operation of the heater as well as safety and hazardous issues as they relate to the heater, its installation, operation and this manual.

Leave this manual with the consumer and instruct them to retain the manual for future reference.

HEATER OPERATION NOTE: PH-A Series/Standard Output Patio Heaters will have a higher heat output at the burner end as compared to the exhaust end.

SPACE HEATING: For enclosed applications, it is generally suggested to locate the burner end of PH-A Series/Standard Output heaters toward the highest heat-loss area (such as doors) of the space being heated.

SPOT HEATING: For PH-A Series/Standard Output heaters with a straight-line configuration, there will be a noticeable and more pronounced perception of greater heat output from the burner end of the heater as compared to the exhaust end. **For spot heating applications, it is recommended by the factory to use the PH-HO Series/High Output models** or, install two PH-A Series/Standard Output heaters side by side with the burner heads at opposite ends to promote even heating. Alternatively, a u-bend configuration on a PH-A Series/Standard Output can provide a more even source of heat.

Contact the factory if you have any concerns or questions regarding orientation or layout in your application.

NOTE: A small amount of condensation may occur from the heater when it starts the heating cycle. The condensation will stop once the heater warms up. For PH-A Series/Standard Output models where using a venting system, ensure the venting is sealed and installed according to the section in this manual titled "VENTING PH-A/STANDARD OUTPUT MODELS".

Minimum run time is 10 minutes to help prevent tube corrosion from condensation on heater cycle.

5.0 CODE COMPLIANCE

Installation shall be in accordance with local building codes, or in the absence of local codes, in accordance with:

A. FUEL SUPPLY

CANADA: ***Natural Gas and Propane Installation Code, CSA B149.1*** *or latest edition.*
USA: ***National Fuel Gas Code, ANSI Z223.1/NFPA 54,*** *or latest edition.*

B. ELECTRICAL GROUNDING

CANADA: ***Canadian Electrical Code, CSA C22.1*** *or latest edition.*
USA: ***National Electrical Code, ANSI/NFPA* 70** *or latest edition.*

In Canada: Electrical equipment and wiring shall comply with the applicable provisions of the current ***Canadian Electrical Code, CAN/CSA C22.1, Part I and Part II, and CAN/CSA C22.2 No.3, Electrical features of Fuel Burning Equipment***.

⚠ **WARNING: SEE PAGES 30 TO 32 FOR VENTILATION REQUIREMENTS FOR THIS HEATER. MAKE SURE YOU HAVE THE CORRECT MODEL FOR THE INTENDED APPLICATION. IF IN DOUBT CONTACT THE FACTORY FOR DETAILS PRIOR TO INSTALLATION OR OPERATION.**

6.0 SPECIFICATIONS

GENERAL SPECIFICATIONS

Rating: (Input: Natural Gas and Propane)

In Canada: 0 – 4,500' (1,372 m); **In USA**: 0 – 2,000' (610 m) - De-rate Above 2,000' (610 m) (see page 50)

MODEL	BURNER INPUT BTUH		HEATER LENGTH
	MIN	MAX	
PH-40A	20,000	40,000	11' 3" (3.43 m)
PH-40 HO	20,000	40,000	5' 2" (1.57 m)
PH-50A	25,000	50,000	16' 3" (4.95 m)
PH-75A	37,500	75,000	21' 3" (6.48 m)
PH-75 HO	37,500	75,000	10' 2" (3.10 m)
PH-80A*	40,000	80,000	21' 3" (6.48 m)
PH-80 HO*	40,000	80,000	10' 2" (3.10 m)
PH-100A*	50,000	100,000	31' 3" (9.53 m)
PH-100 HO*	50,000	100,000	20' 2" (6.15 m)
PH-125A*	62,500	125,000	41' 3" (12.58 m)
PH-125 HO*	62,500	125,000	20' 2" (6.15 m)

* = Not current production

GAS PRESSURE at MANIFOLD:

FUEL:	VARIABLE INPUT:	
Natural Gas:	Low: 1.5" (3.8 cm) WC	High: 3.5" (8.89 cm) WC
Propane:	Low: 5.5" (13.97 cm) WC	High: 10.5" (26.67 cm) WC

Gas Connection Size: 0.5" (1.27 cm) NPT

GAS INLET PRESSURE:

FUEL:	MINIMUM:	MAXIMUM:
Natural Gas:	4.5" (11.43 cm) WC	14.0" (35.56 cm) WC
Propane:	11.5" (29.21 cm) WC	14.0" (35.56 cm) WC

PH-A SERIES/STANDARD OUTPUT ONLY: Vent Connection is 3" (7.62 cm)

ELECTRICAL RATING:

DSI Ignition, 120V, 60hz, 1 Amp, 120V grounded A/C connection, 24V low voltage control.

STANDARD EQUIPMENT:

Burner control housing is pre-assembled and pre-wired; unit comes complete with the following: industry standard gas, electrical and venting connections, modulating gas burner, balanced air rotor, thermal overload protected motor, visual burner inspection sight glass, combustion and air proving safety switches, 3-try spark ignition control, low voltage control connection, 4" heat treated aluminized steel combustion tube, polished aluminum standard reflector, 4” heat treated aluminized steel radiant heat exchanger, tube couplers, 304 stainless steel joint/hanger pieces, 304 stainless steel burner case, heat economizer baffle/turbulator, decorative grille, variable input control panel with ON/OFF toggle switch, ON indicator light.

High Output Series: 304 stainless steel construction.

Optional Equipment:		
- 4” x 90° Elbow Kit*	- 4” x 180° U-Bend Kit*	- Mounting Bracket Kit *Available in 304 or 316 Stainless Steel*
- 316 Marine Grade Stainless Steel Construction	- Stainless Steel Construction*	- Low Voltage Thermostat* *Indoor Applications Only*
- 3” Sidewall Vent Kit (C-Vent)*	- 3” x 90° Venting Elbows*	- 24 Volt Input (special order) *24 Volt Transformer not included*

*= PH-A Series/Standard Output Heaters ONLY

Special order items as identified above may be manufactured to order, have a slight variation in design or contain different internal components from a standard package and may not be able to be used as an “add-on” to an existing heater without modification or complete replacement. For example, a 24V input heater will have different internal components to support the functionality. For questions or compatibility checks, please contact the factory for assistance.

7.0 DIMENSIONS

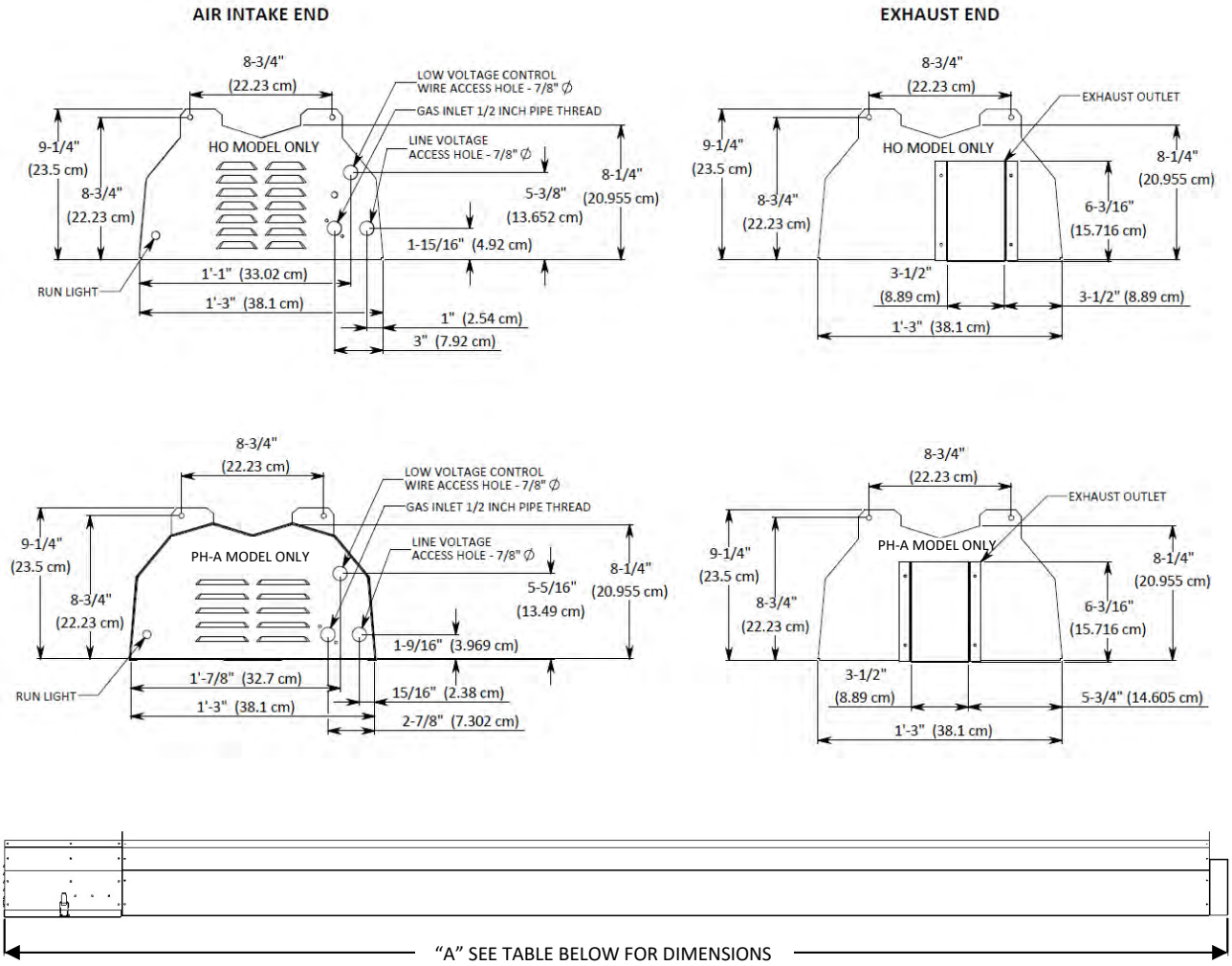

Figure 1. EQUIPMENT DIMENSION

Table of Dimensions and Weights:

HEATER MODEL	DIMENSION "A" LENGTH	WEIGHT
PH-40A	11’ 3” (3.43 m)	70 lbs. (31.8 kg)
PH-40 HO	5’ 2” (1.57 m)	70 lbs. (31.8 kg)
PH-50A	16’ 3” (4.95 m)	95 lbs. (43.1 kg)
PH-75A	21’ 3” (6.48 m)	110 lbs. (49.9 kg)
PH-75 HO	10’ 2” (3.10 m)	120 lbs. (54.4 kg)

8.0 INSTALLATION CLEARANCES AND CLEARANCE TO COMBUSTIBLES

Installation of overhead heaters MUST meet the requirements for bottom (below) clearances detailed in **CANADA:** ***Natural Gas and Propane Installation Code, CSA B149.1,*** or latest edition, or **USA:** ***National Fuel Gas Code, ANSI Z223.1/NFPA 54***, or latest edition.

⚠ **WARNING:** In all situations, clearances to combustibles must be maintained. Minimum clearance from the heater must be maintained for vehicles parked or combustible objects below the heater. The posting of signs may be required in storage areas referring to clearances to combustibles to the heater and/or limiting the stacking height of stored items near the heater specifying a maximum height. Clearances are only for applications where sufficient ventilation and airflow are provided (see pages 30 to 32). Certain materials or items will be subjected to radiant heat and could be seriously damaged.

⚠ **WARNING:** For all models, the stated clearance to combustibles represents a surface temperature of 90°F (32°C) above ambient temperature. **Building material with low heat tolerance (such as vinyl siding, canvas, engineered woods, etc.) may be subject to degradation at lower temperatures.** It is the installer's responsibility to ensure that adjacent material with a low heat tolerance which may degrade at lower temperatures is protected to prevent degradation. When in doubt, check the heat tolerance of building material(s) with their manufacturer.

MINIMUM MOUNTING HEIGHT

The minimum hanging height from the ground or floor to the bottom portion of tube is 78” (199 cm).

WARNING: HIGH SURFACE TEMPERATURES! – The factory recommended hanging height is 8 to 10 feet above the ground or floor to aid in prevention of accidental human contact with the heater surfaces.

Children and adults should be alerted to the hazards of high surface temperatures and should stay away to avoid burns or clothing ignition. Young children should be carefully supervised when they are in the same place as the heater.

Clothing or other flammable materials should not be hung from the heater or placed on or near the heater.

END CLEARANCES

BURNER HEAD END

Minimum clearance from air intake end of the burner head to structure is 5" (12.7 cm). Provide adequate accessibility clearances for servicing and proper operation. Do not install the unit in such a manner that the combustion air entering the heater is reduced in any manner.

WARNING: In unvented installations, do not install multiple units in such a manner that the intake of one heater is next to the exhaust end of another heater. This condition will result in combustion products entering the air intake and can lead to property or heater damage and an unsafe operating condition. Units must have a supply of clean air and proper ventilation for operation. See the section titled “VENTING REQUIREMENTS”.

EXHAUST END

See section “HORIZONTAL AND VERTICAL VENTING APPLICATIONS” (Pages 34 to 38) for Venting Clearances for Enclosed Applications.

END CLEARANCES FOR OUTDOOR APPLICATIONS ONLY (EXHAUST END)

EXHAUST END CLEARANCE TO STRUCTURE (ALL MODELS)

OUTDOOR APPLICATIONS ONLY

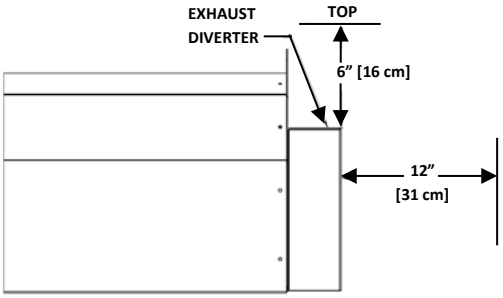

Refer to "VENTING REQUIREMENTS" on pages 30 to 32.

Figure 2. OUTDOOR EXHAUST END CLEARANCE TO STRUCTURE

EXHAUST END CLEARANCE FOR MULTIPLE UNIT INSTALLATIONS (ALL MODELS)

OUTDOOR APPLICATIONS ONLY

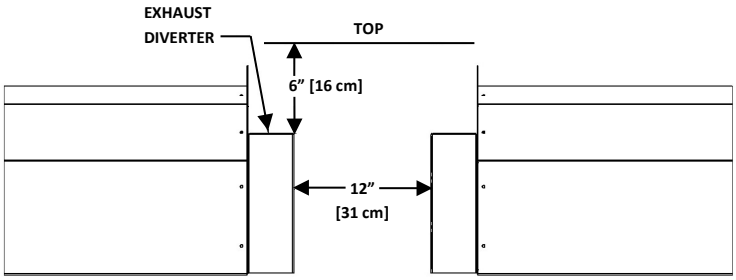

Refer to "VENTING REQUIREMENTS" on pages 30 to 32.

Figure 3. OUTDOOR EXHAUST END TO EXHAUST END CLEARANCE (RECOMMENDED)

EXHAUST END CLEARANCE FOR MULTIPLE UNIT INSTALLATIONS (ALL MODELS)

OUTDOOR APPLICATIONS ONLY

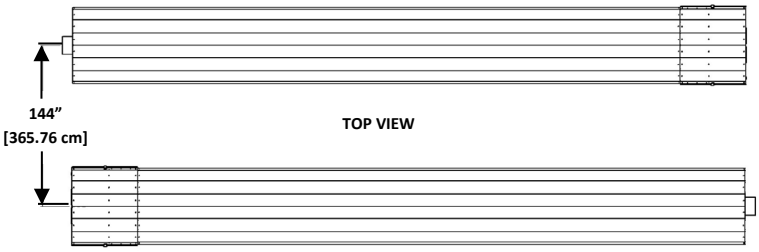

WARNING!

Do not install unvented units in an arrangement where the exhaust vent is located next to the intake of another heater. See page 10 for warning.

Refer to "VENTING REQUIREMENTS" on pages 30 to 32.

Figure 4. OUTDOOR EXHAUST END TO BURNER HEAD END CLEARANCE (PARALLEL)

EXHAUST END PH-A SERIES/ STANDARD OUTPUT ONLY

VENTED APPLICATIONS ONLY

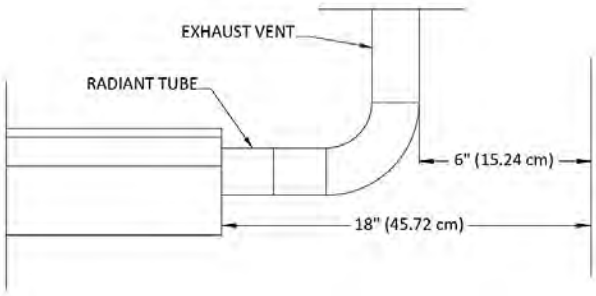

For horizontal (sidewall) venting, please refer to "HORIZONTAL AND VERTICAL VENTING APPLICATIONS" (Pages 34 to 38) for Venting Clearances.

Refer to "VENTING REQUIREMENTS" on pages 30 to 32.

Figure 5. OUTDOOR EXHAUST END CLEARANCE FOR VENTED APPLICATIONS (THROUGH ROOF)

HEATER INSTALLATION CLEARANCES

HORIZONTAL

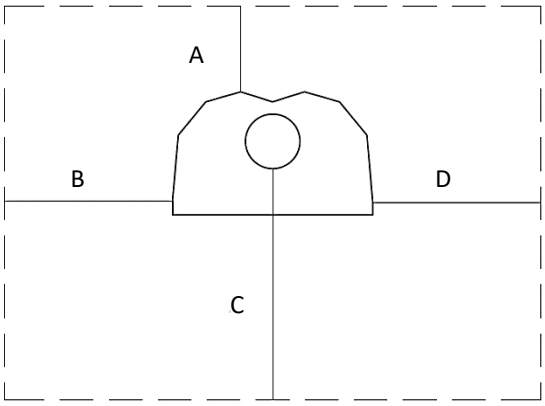

INSTALLATION TYPE 1

Model	A	B	C	D
PH-40A	4" (10.2 cm)	12" (31 cm)	34" (87 cm)	12" (31 cm)
PH-50A	4" (10.2 cm)	12" (31 cm)	41" (105 cm)	12" (31 cm)
PH-75A	4" (10.2 cm)	15" (32 cm)	46" (117 cm)	15" (32 cm)
PH-40 HO	8" (21 cm)	17" (44 cm)	41" (105 cm)	17" (44 cm)
PH-75 HO	6" (15.3 cm)	12" (31 cm)	42" (107 cm)	12" (31 cm)

Figure 6. STANDARD REFLECTOR CLEARANCE

TILT

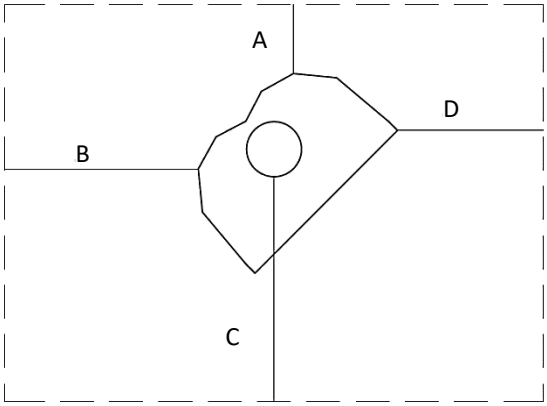

INSTALLATION TYPE 2

Model	A	B	C	D
PH-40A	4" (10.2 cm)	4" (10.2 cm)	31" (79 cm)	28" (72 cm)
PH-50A	4" (10.2 cm)	4" (10.2 cm)	35" (89 cm)	28" (72 cm)
PH-75A	4" (10.2 cm)	4" (10.2 cm)	40" (102 cm)	31" (79 cm)
PH-40 HO	8" (21 cm)	4" (10.2 cm)	28" (72 cm)	25" (64 cm)
PH-75 HO	6" (15.3 cm)	4" (10.2 cm)	31" (79 cm)	22" (56 cm)

Figure 7. 25° TO 45° TILT CLEARANCE

NOTE: The stated clearances above are based on correct installation of the heater(s) adjacent to material with a heat tolerance able to withstand the ambient temperature increase while the heater is operating at maximum capacity. Some materials, for instance some vinyl sidings, have a low heat tolerance and can melt, distort, or damage when exposed to temperatures lower than calculated in the above clearance to combustible tables. This can happen immediately or with consistent exposure over time.

Consult the manufacturer of the building material(s) that the heaters are being installed near for the heat tolerance (maximum temperature to softening or distortion) of the product. Calculate the maximum operating temperature at the distances indicated on the charts above by adding 90° F to the maximum ambient temperature of the installation area. Compare this calculated temperature to the heat rating of the material that the heaters are installed adjacent to. It may be necessary to increase the distance from the material or to install a heat shield (supplied by others).

It is the installer's responsibility to ensure that adjacent material with a low heat tolerance which may degrade at lower temperatures are protected to prevent degradation while observing appropriate clearances, air flow requirements and proper ventilation of the units selected.

9.0 PRE-INSTALLATION INSPECTION

Inspect the shipping container and heater for any evidence of shipping damage. If heater damage is found, notify the freight carrier and file a claim.

⚠ WARNING:

IF THE HEATER IS DAMAGED, DO NOT INSTALL

Check that all parts and pieces are present and accounted for. Report any missing items to the carrier or point of purchase at once.

Check that the overall general appearance, source of fuel required, and model numbers match unit requested. Report any discrepancy to carrier or point of purchase at once.

THOROUGHLY INSPECT THE EQUIPMENT IMMEDIATELY UPON ARRIVAL

OUR RESPONSIBILITY FOR THE SHIPMENT CEASED WHEN THE CARRIER SIGNED THE WAYBILL.

If goods are received short or in damaged condition, it is important that you notify the carrier and insist on a notation of the loss or damage across the face of the freight bill; otherwise, no claim can be enforced against the transportation company. It is also good practice to take photos of the condition of the shipment received at the time of delivery.

If concealed loss or damage is discovered, notify your carrier at once and request an inspection. This is absolutely necessary. A concealed damage report must be made within 5 days of delivery of shipment. Unless you do this, the carrier will not entertain any claim for loss or damage. An agent will arrange an inspection and grant a concealed damage notation. **If you give the Transportation Company a clear receipt for goods that have been damaged or lost in transit, you do so at your own risk and expense.**

CALCANA IS WILLING TO ASSIST YOU IN EVERY POSSIBLE MANNER TO COLLECT CLAIMS FOR LOSS OR DAMAGE, BUT THIS WILLINGNESS ON OUR PART DOES NOT MAKE US RESPONSIBLE FOR THE COLLECTION OF CLAIMS OR REPLACEMENT OF MATERIAL. THE ACTUAL FILING AND PROCESSING OF THE CLAIM IS YOUR RESPONSIBILITY.

CALCANA IS NOT RESPONSIBLE FOR FREIGHT DAMAGED IN TRANSIT!

THE CARTON OR PACKAGING MAY NOT APPEAR TO HAVE DAMAGE, SO IT IS IMPERITIVE TO OPEN ALL THE PACKAGES TO INSPECT THE PRODUCT.

IF CONTENTS ARE DAMAGED:

A. MAKE CLAIM TO DELIVERY CARRIER AT ONCE
B. SAVE CARTONS FOR INSPECTION BY CARRIER

10.0 PACKAGING CONTENTS & PART DESCRIPTIONS

A. **PH-40 HO & PH-75 HO, HIGH OUTPUT MODELS**

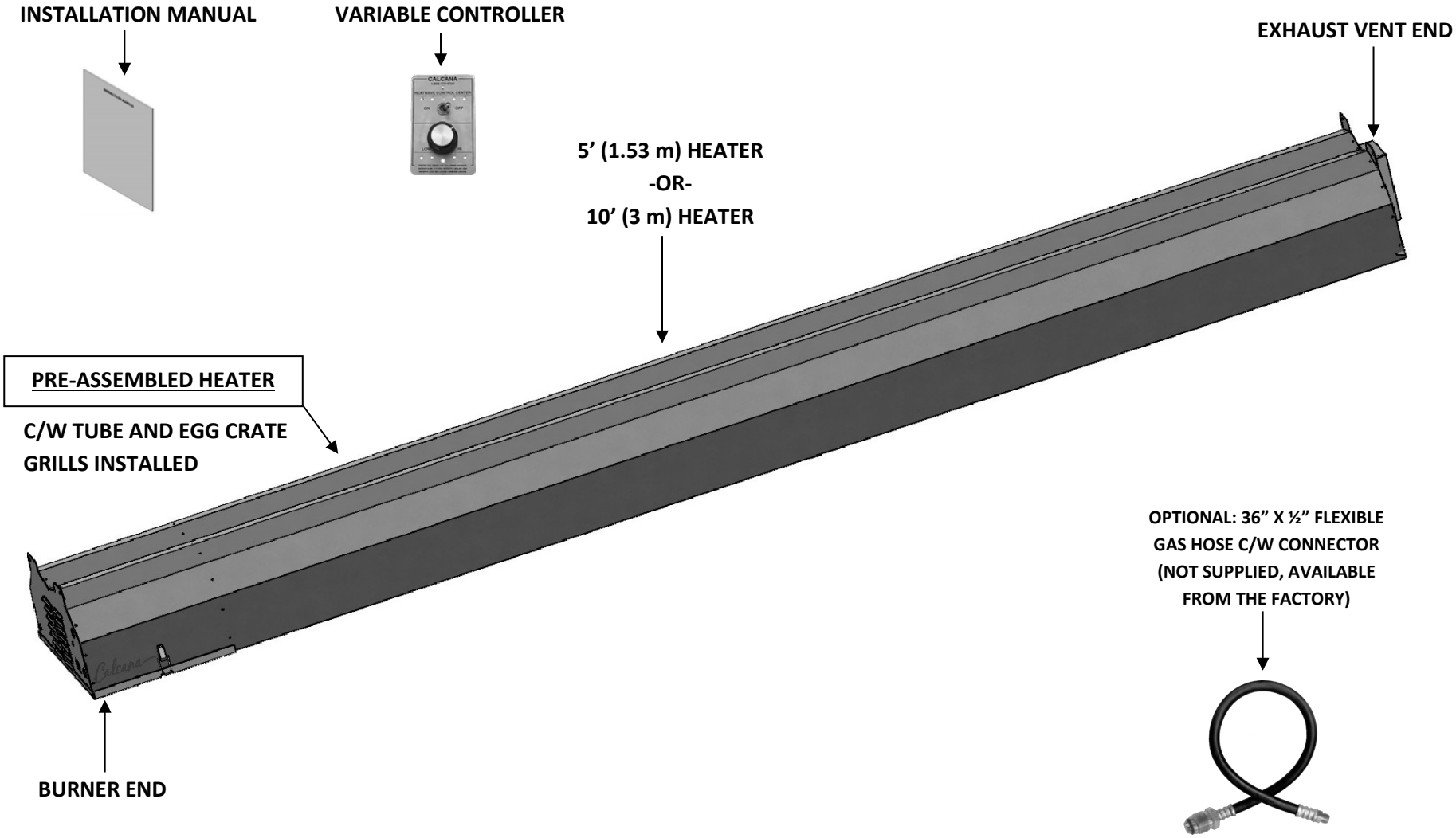

Figure 8. PH-40 HO & PH-75 HO PACKAGE CONTENTS

B. **PH-40A, STANDARD OUTPUT MODEL**

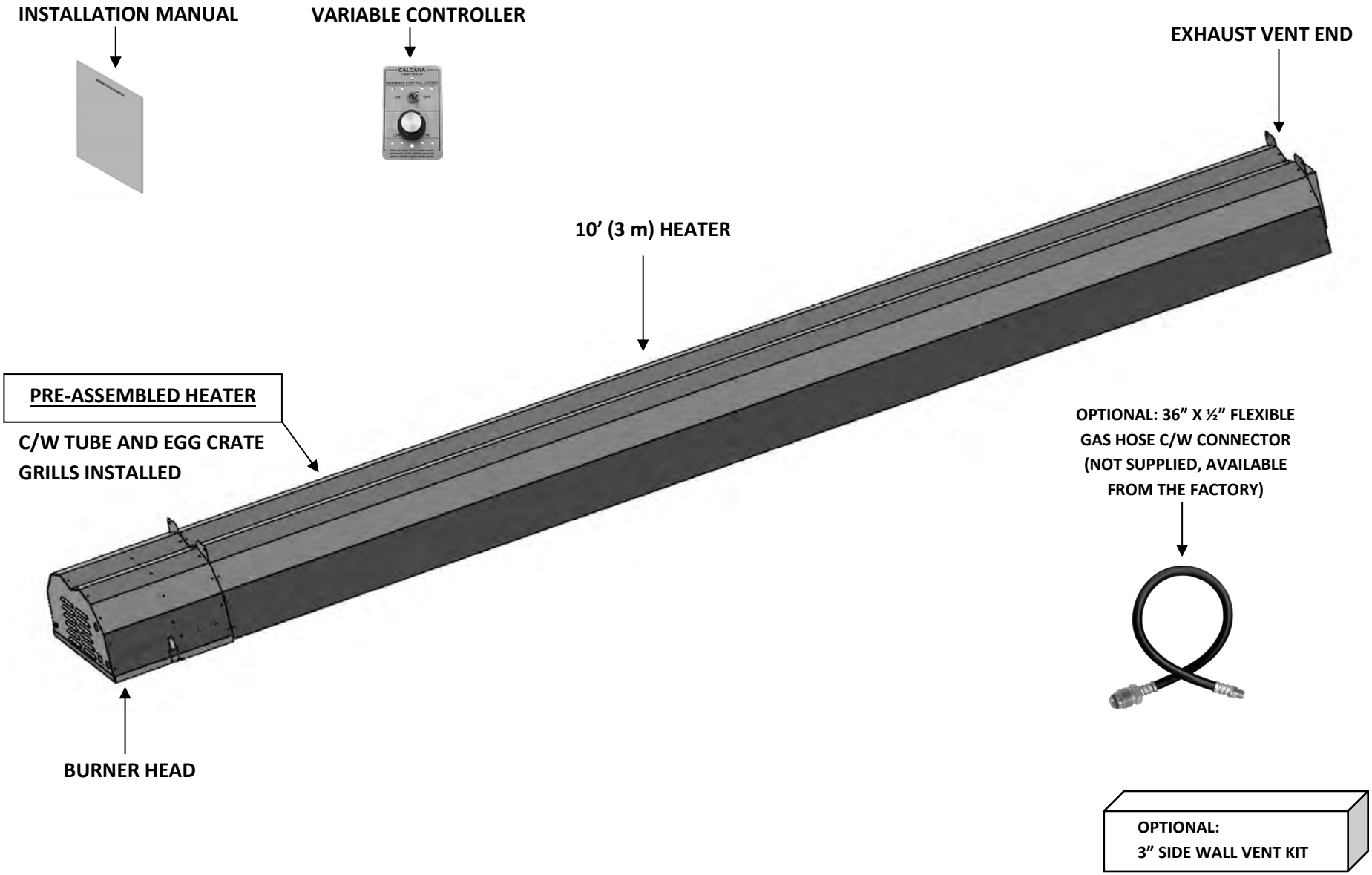

Figure 9. PH-40A PACKAGE CONTENTS

C. **PH-50A, STANDARD OUTPUT MODEL**

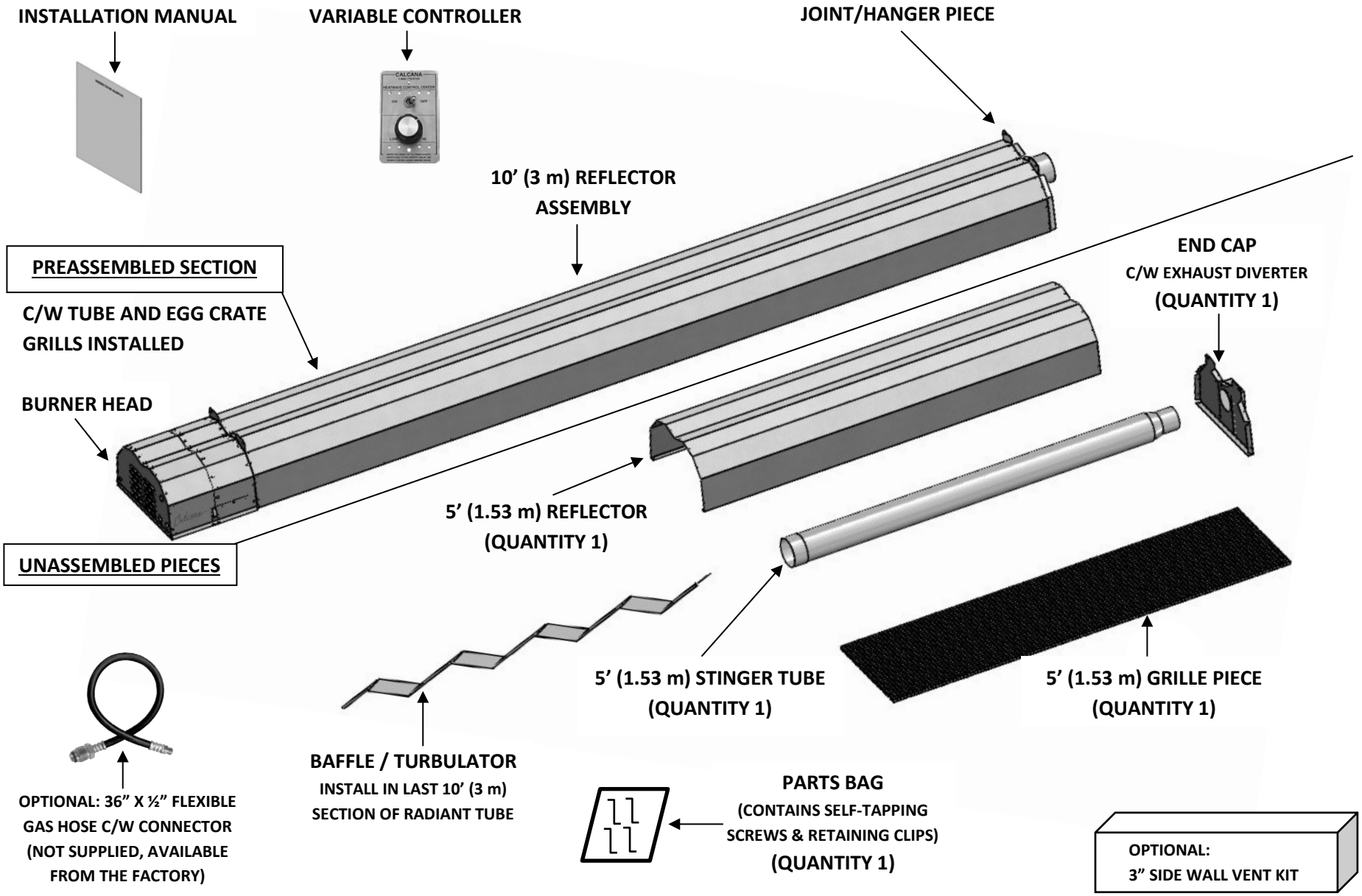

Figure 10. PH-50A PACKAGE CONTENTS

D. **PH-75A, STANDARD OUTPUT MODEL**

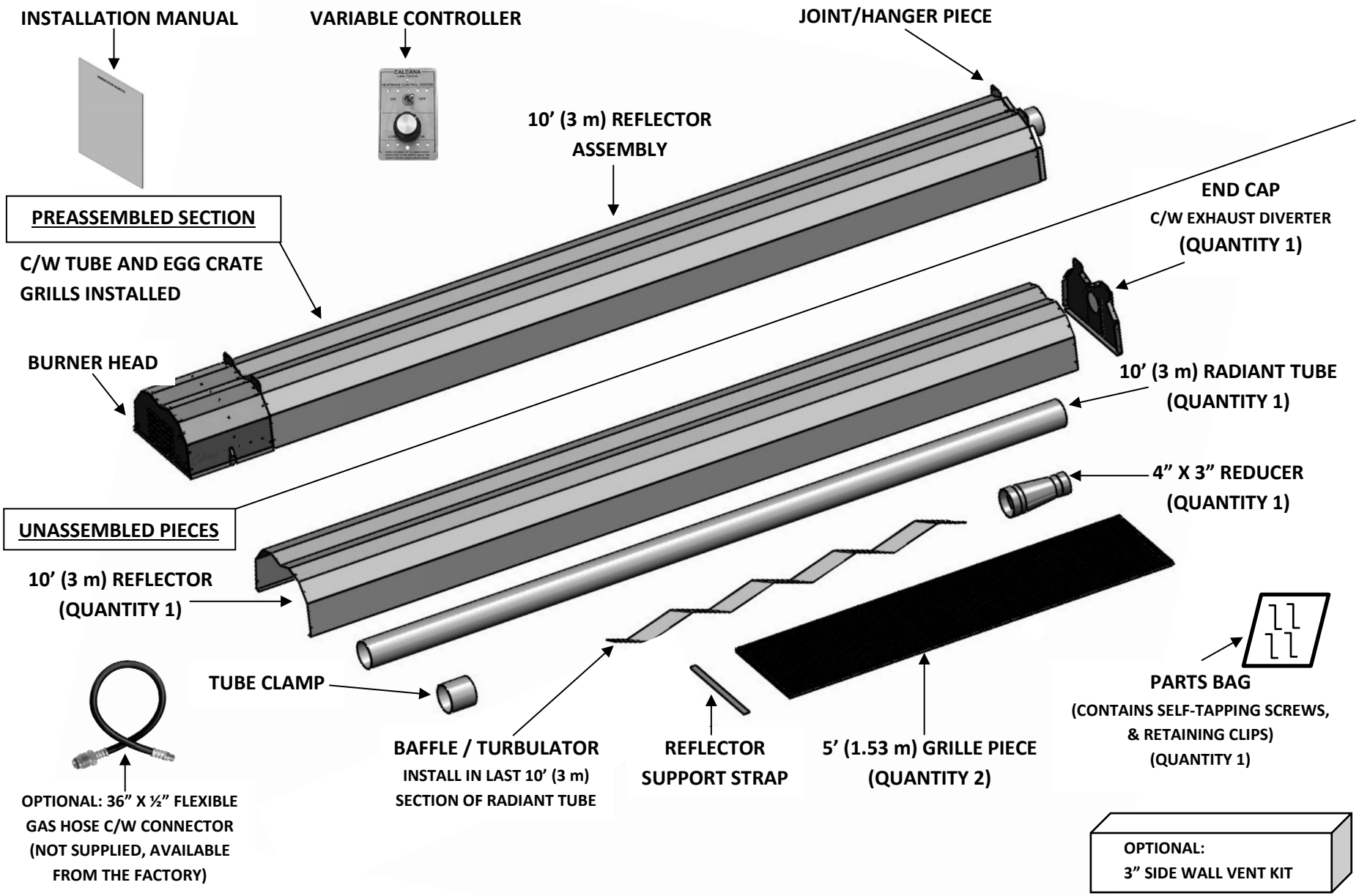

Figure 11. PH-75A PACKAGE CONTENTS

E. **SIDE WALL VENT KIT 3” (7.62 CM) (OPTIONAL)**

FOR PH-A SERIES/STANDARD OUTPUT MODELS ONLY ** **90˚ Exhaust Elbows not included** **

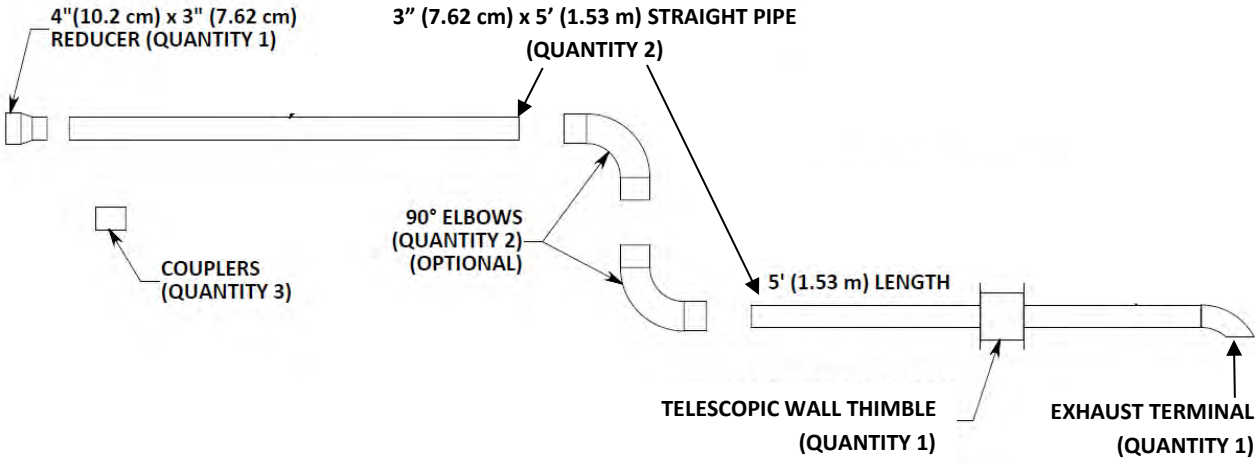

Figure 12. 3” (7.62 cm) SIDE WALL VENT KIT PACKAGE CONTENTS

F. **90° ELBOW PACKAGE (OPTIONAL)**

FOR PH-A SERIES/STANDARD OUTPUT MODELS ONLY

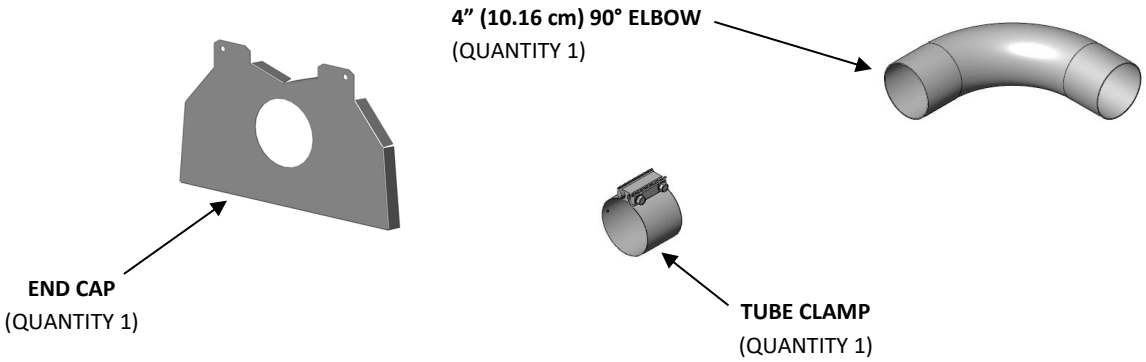

Figure 13. 90° ELBOW PACKAGE CONTENTS

G. **180° U-BEND PACKAGE (OPTIONAL)**

FOR PH-A SERIES/STANDARD OUTPUT MODELS ONLY

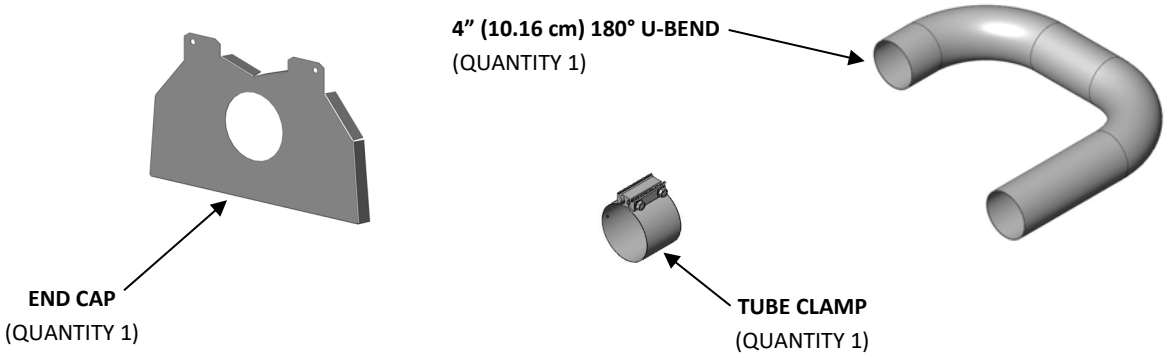

Figure 14. 180° U-BEND PACKAGE CONTENTS

11.0 INSTALLATION

Provide adequate clearance around air openings into the combustion chamber, clearances from combustible material, provisions for accessibility and for combustion and ventilating air supply.

11.1 PLANNING

- Familiarize yourself with the equipment and any accessories that you may require.
- Locate the area where the unit is to be installed.
- Locate area where any holes might have to be cut for:
    - Electrical and control wire
    - Any gas piping requirements
    - Venting (PH-A Series/Standard Output Models Only)
- Ensure that there is no obstruction such as hidden electrical wiring, water lines, etc. in the areas of concern.
- Locate the mounting location for the variable controller (all models) and optional thermostat (PH-A Series/Standard Output models indoor installation only).

⚠ **WARNING:** Observe minimum clearance to combustibles. Refer to pages 10 through 12.

- Locate a grounded, 120V A/C electrical source.
- Measure the required amount of the various materials essential to do the installation and have these materials on site in an organized manner prior to commencement.

12.0 SUSPENSION OF HEATER

See warnings on page 10.

Locate appropriate suspension points on ceiling, roof, wall or beam. Each heater is suspended at 5’ (1.53 m) or 10' (3 m) intervals. The heater tube is to be level once suspended.

TILT INSTALLATIONS: It is important NOT to over-tilt the heater. Units are certified for installation up to 45°; however, the MAXIMUM recommend tilt is no greater than 25°.

NOTE: 45° Tilt is NOT RECOMMENDED. This tilt angle causes the ambient air to form a convection current over the tube. The net effect of this action is reduced infrared output (decreased heating capacity) as well as decreased exhaust temperature which may increase the chance of condensation of combustion by-products.

⚠ **WARNING: If the installer is to suspend the heater via hanging chains, it is the responsibility of the installer to use hanging chain that has a minimum support capacity of no less than 100 lbs. and to ensure all suspension points are adequate to support the weight of the heater as well as any accessories. All S-Hooks must be affixed properly, and the open ends squeezed closed. If the suspension system fails, it is the responsibility of the installer. A failed suspension system can cause property damage, severe injury and/or death. Suspension by chains is not recommended for windy areas.**

If utilizing installation brackets or another means of rigid suspension is used, ensure all brackets and fasteners have sufficient load bearing capacity to satisfy the local codes as well as the extra load that may be placed upon the heater and suspension methods encountered during windy conditions or snow loads.

A FAILED SUSPENSION SYSTEM CAN CAUSE PROPERTY DAMAGE, SEVERE INJURY AND/OR DEATH. THE INSTALLER TAKES FULL RESPONSIBILITY AND LIABILITY FOR THE CORRECT AND ADEQUATE METHOD OF INSTALLATION AND SUSPENSION OF THE HEATER FOR THE CONDITIONS AND/OR LOCATION THAT THE HEATER IS TO BE INSTALLED AT. THE SUSPENSION DETAILS IN THIS MANUAL ARE SUGGESTIONS ONLY. IF IN DOUBT AS TO THE CORRECT METHODS TO INSTALL THIS HEATER FOR YOUR LOCAL CODES AND CONDITIONS, DO NOT INSTALL THE HEATER. CONTACT LOCAL BUILDING OFFICIALS FOR FURTHER INFORMATION.

A. RIGID MOUNTING (RECOMMENDED)

Locate, measure, mark and drill appropriate holes for the mounting hardware on the wall, ceiling or support. Each heater is suspended at 5’ (1.53 m) or 10' (3 m) intervals. The heater tube is to be level once suspended.

Fastener(s) must penetrate building materials and be secured in such a way that the unit will not be dislodged from the mounting location during normal use and operation, including consideration of wind load and snow load if applicable. This is the responsibility of the installation contractor. (See warning on page 20).

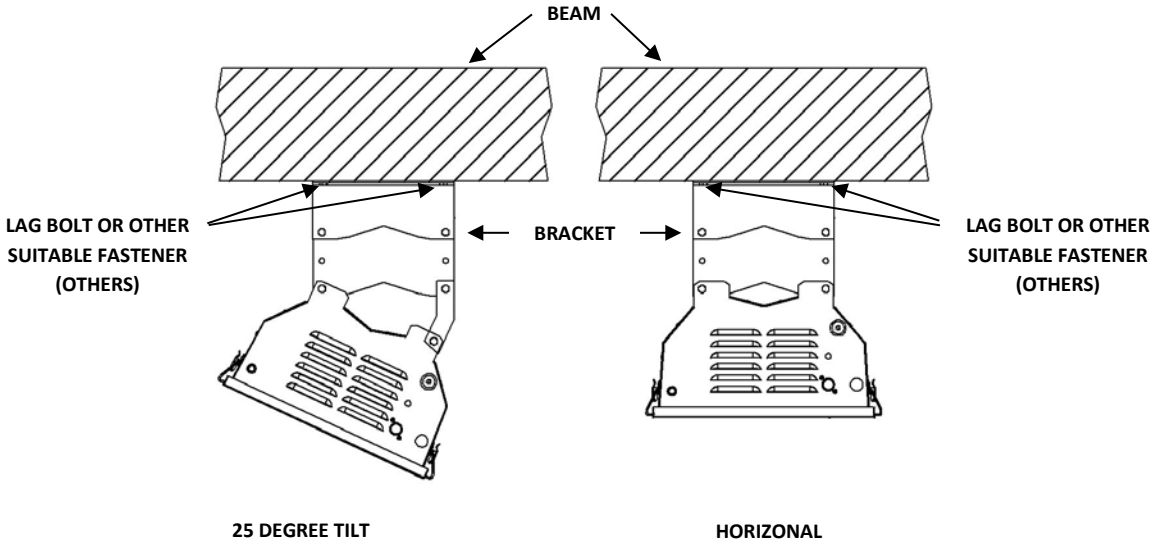

Figure 15. CEILING MOUNT RIGID INSTALLATION

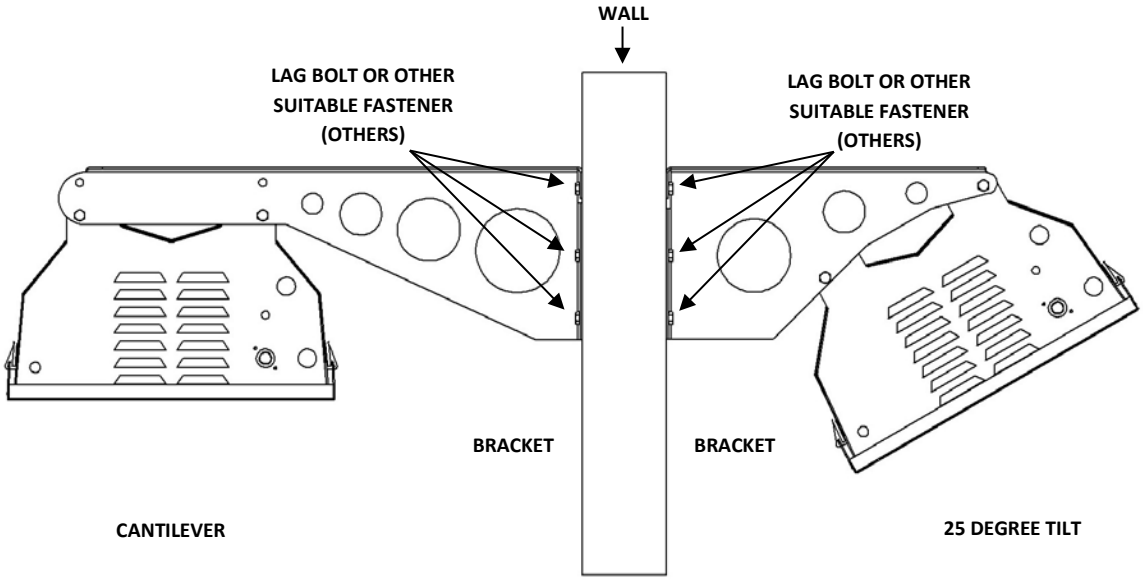

Figure 16. WALL MOUNT RIGID INSTALLATION

B. **CHAIN MOUNTING**

Not recommended for windy areas. Locate, measure, mark and drill appropriate holes for the suspension points on the ceiling or support. Each heater is suspended at 5’ (1.53 m) or 10' (3 m) intervals. Adequately secure chains to suspension points and size chain to suspend at the desired level. The heater tube is to be level once suspended. **NOTE:** Each end cap and joint hanger requires individual chains for each suspension point.

Fasteners must penetrate and be secured in the overhead material in such a way that the unit will not be dislodged from the mounting location during normal use and operation, including consideration of wind load and snow load if applicable. This is the responsibility of the installation contractor. (See warning on page 20).

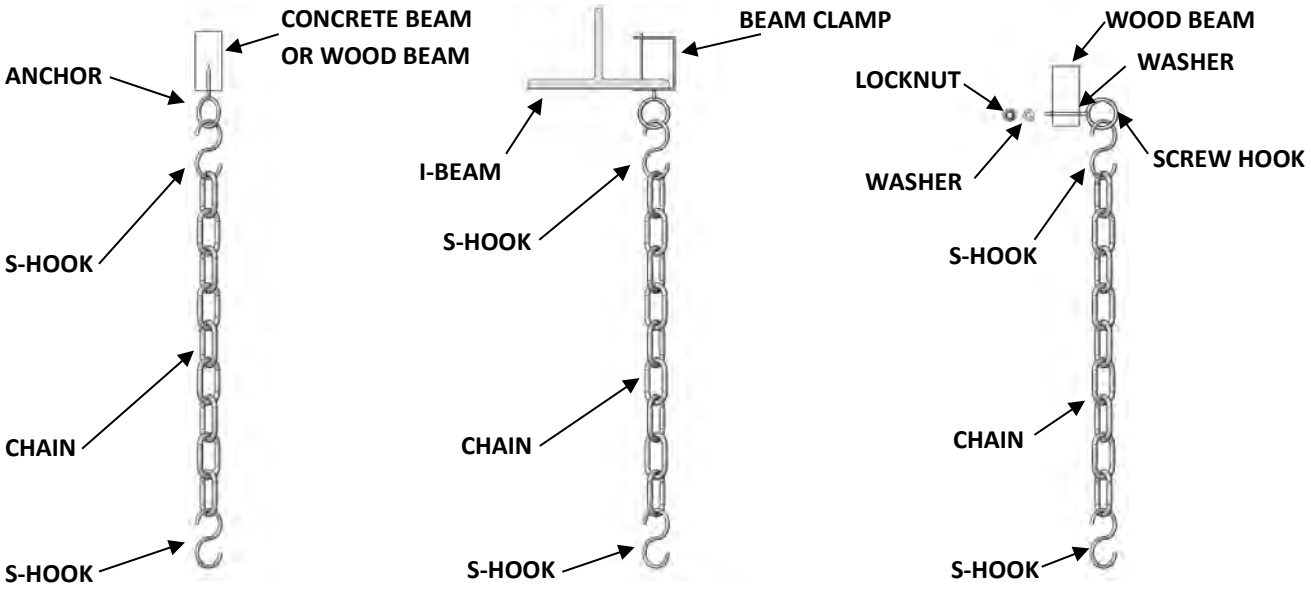

Figure 17. EXAMPLE CHAIN SUSPENSION DETAILS

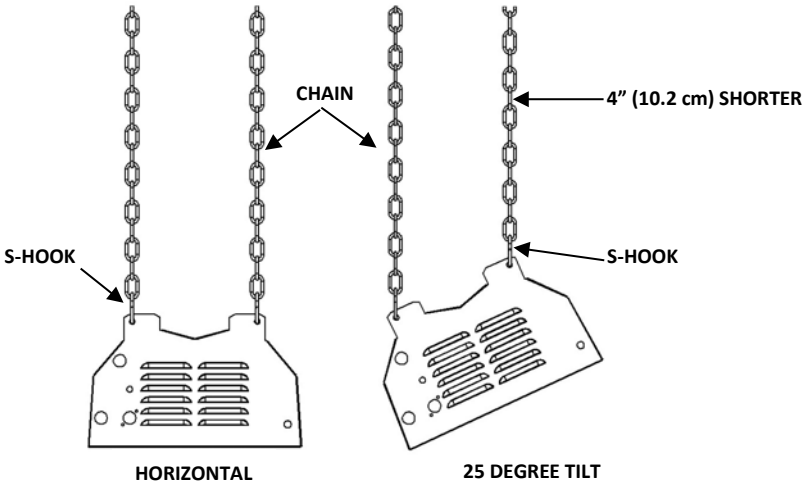

Figure 18. TYPICAL CHAIN INSTALLATION

NOTE: 45° Tilt is NOT RECOMMENDED. This tilt angle causes the ambient air to form a convection current over the tube. The net effect of this action is reduced infrared output (decreased heating capacity) as well as decreased exhaust temperature which may increase the chance of condensation of combustion by-products.

13.0 ASSEMBLY OF COMPONENTS

⚠ **WARNING: SEE PAGES 30 TO 32 FOR VENTILATION REQUIREMENTS FOR THIS HEATER. MAKE SURE YOU HAVE THE CORRECT MODEL FOR THE INTENDED APPLICATION. IF IN DOUBT, CONTACT THE FACTORY FOR DETAILS PRIOR TO INSTALLATION OR OPERATION.**

13.1 GENERAL INSTRUCTIONS

Refer to figures on pages 27 to 29.

Ensure that the radiant tubes are installed with the **seam side down** (towards the floor).

To prevent accidental damage, the heaters should be handled by the 4 corners and the supplied hardboard covering the grille should remain secured to the heater until installation is completed. Remove the hardboard, any shrink wrap and sticker covering fresh air intake prior to initial startup.

Use at least TWO people to hang heaters to ensure safety and prevent heater damage.

A. **INSTALLATION WITH CHAINS, BRACKETS OR OTHER RIGID HARDWARE**

1) Hang the pre-assembled section of the heater:
   a) **RIGID INSTALLATION USING BRACKETS OR OTHER RIGID HARDWARE (RECOMMENDED):**
      i) Install and secure the appropriate fasteners through the mounting brackets (optional) or other rigid mounting hardware, into the pre-marked, pre-drilled holes in the wall or overhead support (see page 21).
      ii) Lift and support the pre-assembled portion of the unit in a safe manner using two people and position to where the heater is to be secured.
      iii) Secure the heater to the brackets/hardware using appropriate fasteners for each mounting location on all hanging points.
   b) **CHAIN INSTALLATION (DO NOT USE IN WINDY CONDITIONS)** READ THE WARNING ON PAGE 20:
      i) Lift and support the pre-assembled portion of the unit in a safe manner using two people.
      ii) Secure the pre-assembled section of the heater to the installed chains (see page 22) using the appropriate fasteners.
2) Models PH-40A, PH-40 HO and PH-75 HO are now mounted, proceed to step 5 below.
   a) **For Model PH-50A**:
      i) Install the flared end of the 5’ stinger tube over the first 10’ (3 m) section tube. Secure with screws.
      ii) Remove the sticker from the baffle. Install the baffle in the radiant tube from the 3” exhaust end and fold the tab over the end.
      iii) Secure the end cap to one end of the remaining reflector by over lapping reflector onto end cap 3/4 inch (see page 26) and secure via self-tapping screws.
      iv) Lift and position the reflector to the pre-assembled section ensuring the 3” end of the installed 5’ tube fits into the endcap. Overlap the reflector on the joint hanger 3/4 inch (see page 25) and secure via self-tapping screws.
      v) Secure the end cap via fasteners to the remaining bracket/hardware for each mounting location.
   b) **For Model PH-75A:**
      i) Secure the end cap to one end of the remaining reflector by over lapping reflector onto end cap 3/4 inch (see page 26) and secure via self-tapping screws.
      ii) Lift and attach the reflector to the joint hanger on the pre-assembled section by overlapping the reflector on the joint hanger 3/4 inch (see page 25) and secure via self-tapping screws.

iii) Secure the end cap via fasteners to the remaining bracket/hardware for each mounting location.
iv) Remove the sticker from the baffle. Install the baffle in the remaining radiant tube and fold the tab over the tube.
v) Attach the supplied 4” x 3” reducer onto the radiant tube on the same side the baffle is installed and fit the flared connection over the baffle tab. Secure via self-tapping screws.
vi) Install the radiant tube to the installed reflector section by positioning the 3 inch (7.62 cm) end into the end cap from below and butting the other end to the previously installed section with the provided tube clamp. Secure the clamp with self-tapping screws.

IMPORTANT: Ensure to secure clamp to tube via self-tapping screws. (See Figure 20 on page 25). Failure to do so will cause tube separation during use and may result in personal injury, property damage or death.

3) Install the decorative grille(s) (supplied in 5' (1.53 m) sections) onto the lip of the newly assembled reflector in a similar fashion used to install 2 x 4 ceiling panels.
   a) If needed, remove some of the screws securing the reflector to the hanger and/or end cap and spread the reflector to facilitate installation being careful not to damage the reflector or grille, then re-secure the reflector.
4) Install the retaining clips (minimum quantity of 6 per 5’ (1.53 m) section of grille).
   a) For model PH-75A, install the provided reflector support strap in the center of the 10’ (3 m) section, securing with self-tapping screws. Note: the support strap should be positioned in such a manner as to support/cover where the installed grilles meet.
5) If installing PH-A Series/Standard Output models indoors (or in an installation requiring additional venting), attach venting as per pages 33 to 38.
   a) **NOTE: PH-HO Series/High Output models cannot be vented**. See pages 30 to 32 for ventilation requirements to ensure you have the correct heater for your application.
6) Connect fuel supply and electrical supply.
7) Mount the control (one per heater) and optional thermostat (for indoor installations) in a convenient location and connect to the heater with appropriate wiring (see pages 43 to 45).

B. **OTHER INSTALLATIONS SUCH AS POST AND TRACK**

Install per the guidelines of the system being used in combination with the applicable instructions in the general installation guidelines for rigid and chain mounting above. Refer to the instructions and installation recommendations in this manual. Read the warning on page 20 first.

IF IN DOUBT AS TO THE CORRECT METHODS TO INSTALL THIS HEATER FOR YOUR LOCAL CODES AND CONDITIONS, DO NOT INSTALL THE HEATER. CONTACT LOCAL BUILDING OFFICIALS FOR FURTHER INFORMATION.

13.2 COMPONENT ASSEMBLY

A. **JOINT HANGER TO REFLECTOR**
(PH-50A & PH-75A MODELS)

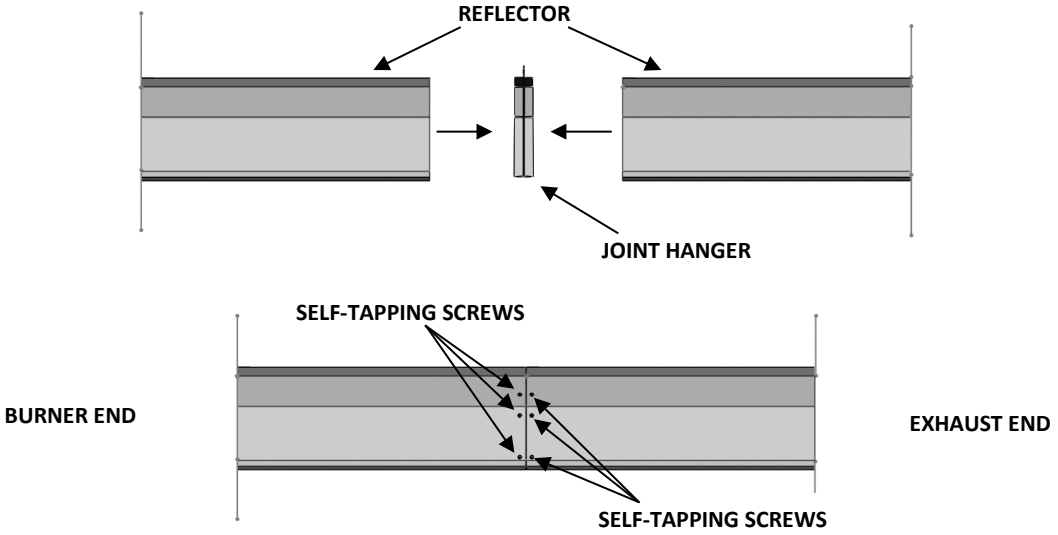

Figure 19. JOINT HANGER INSTALLATION

B. **CLAMP COUPLER**
(PH-50A & PH-75A MODELS)

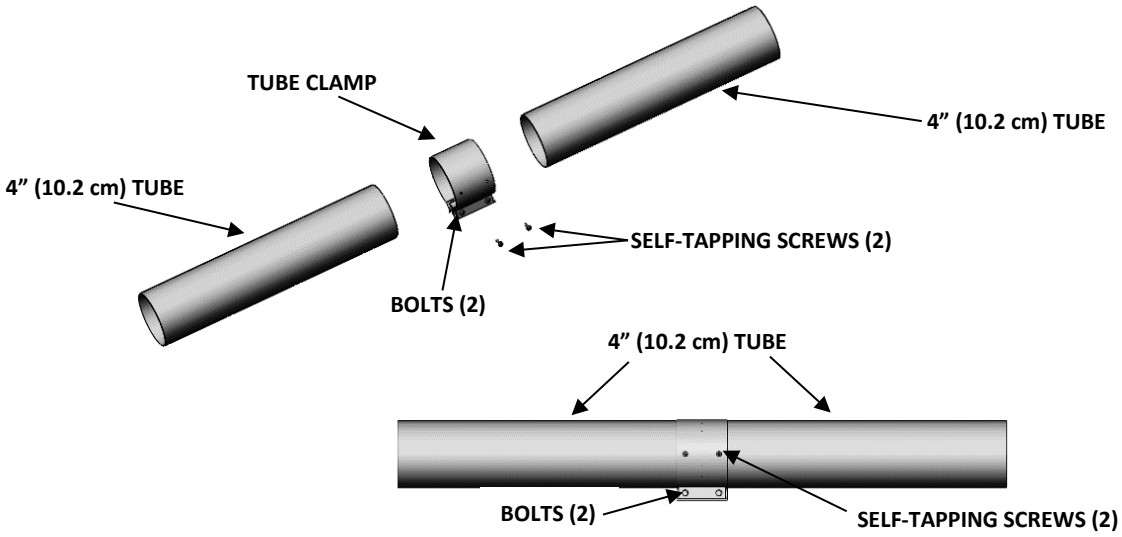

Figure 20. CLAMP COUPLER INSTALLATION

C. **END CAP TO REFLECTOR**
(PH-50A & PH-75A MODELS)

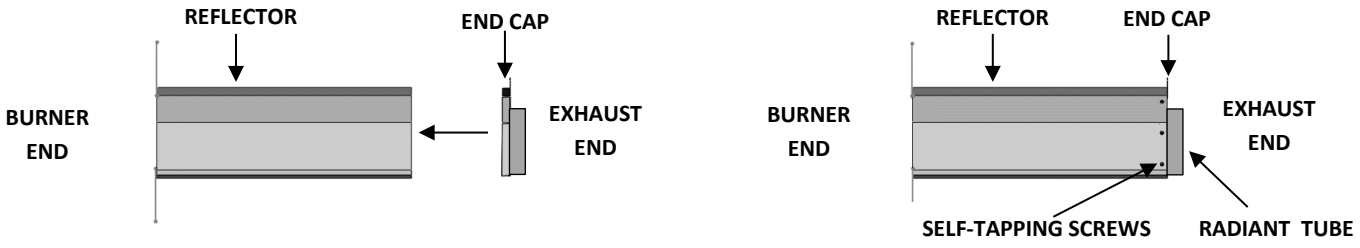

Figure 21. END CAP INSTALLATION

D. **EGG CRATE GRILLE INSTALLATION**

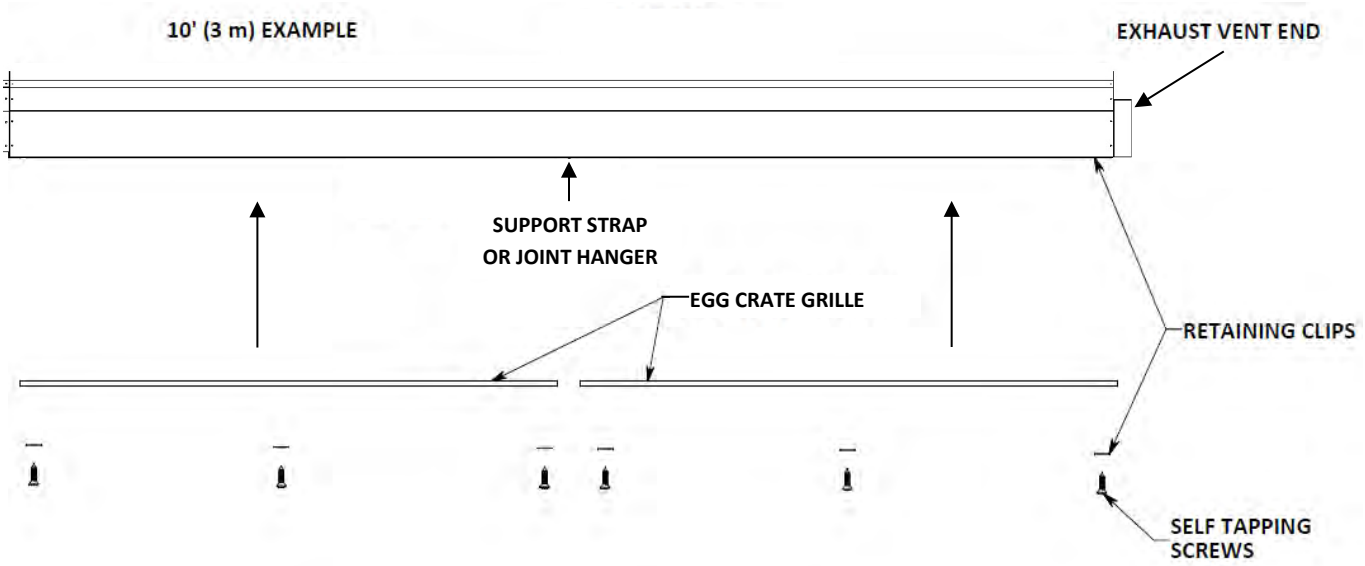

Figure 22. EGG CRATE GRILLE INSTALLATION

14.0 ASSEMBLY OVERVIEW

A. **PH-40A, PH-40 HO & PH-75 HO ASSEMBLY**

These models come pre-assembled from the factory and are supplied with a wall controller (one per heater). Mounting hardware is not included.

B. **PH-50A ASSEMBLY**

Mounting hardware is not included.

PH-50A: 1 - Pre-Assembled Section & 1 - 5' (1.53 m) Section

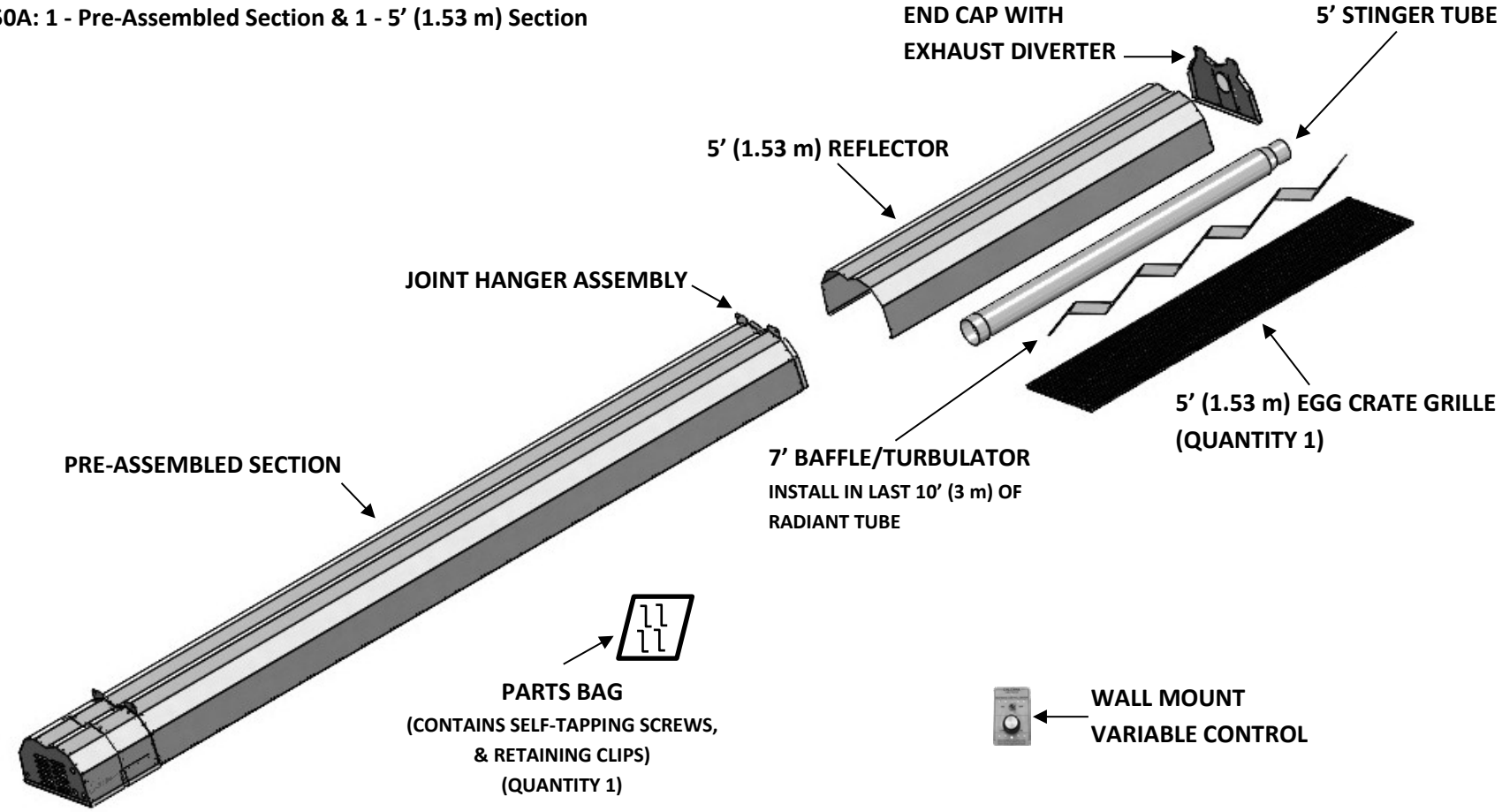

Figure 23. PH-50A ASSEMBLY

C. **PH-75A ASSEMBLY**

Mounting hardware is not included.

PH-75A: 1 - Pre-Assembled Section & 1 - 10’ (3 m) Section

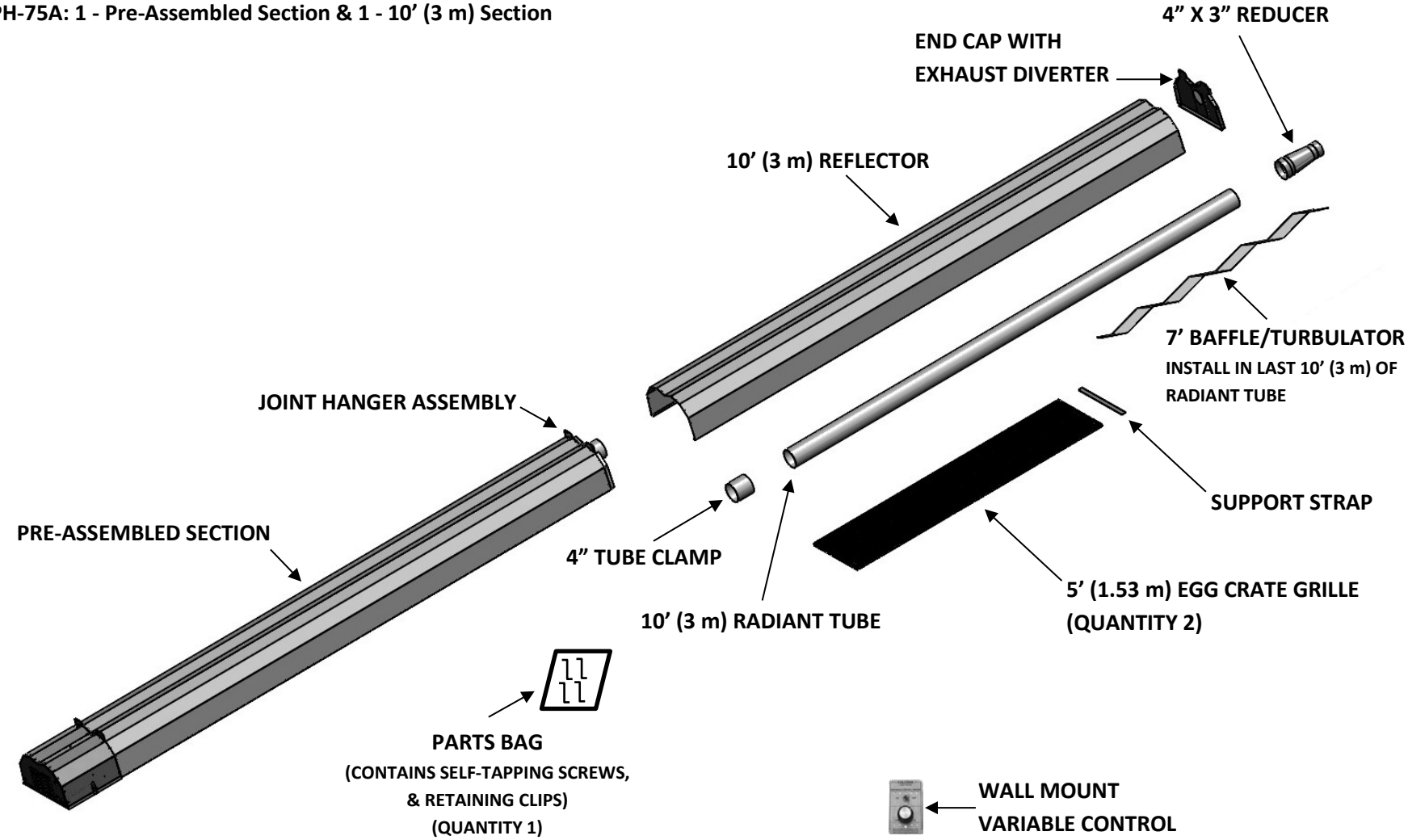

Figure 24. PH-75A ASSEMBLY

IMPORTANT NOTE REGARDING OPTIONAL 180° U-BEND KIT OR 90° U-BEND KIT:

The optional 180° U-Bend Kit or 90° Elbow Kit is only available for the PH-A Series/Standard Output models.

Each 90-degree elbow adds 10 feet to the overall length of the heater and each 180-degree u-bend adds 20 feet to the overall length. Verify with the manufacturer prior to installation to ensure that overall heater length including elbows and/or u-bends does not exceed the maximum allowed length for the BTU of the heater being installed inclusive of applicable venting. Failure to ensure adequate lengths are observed can cause damage to the heater or property and could result in the warranty being void.

D. 90° ELBOW KIT (PH-50A & PH-75A MODELS)

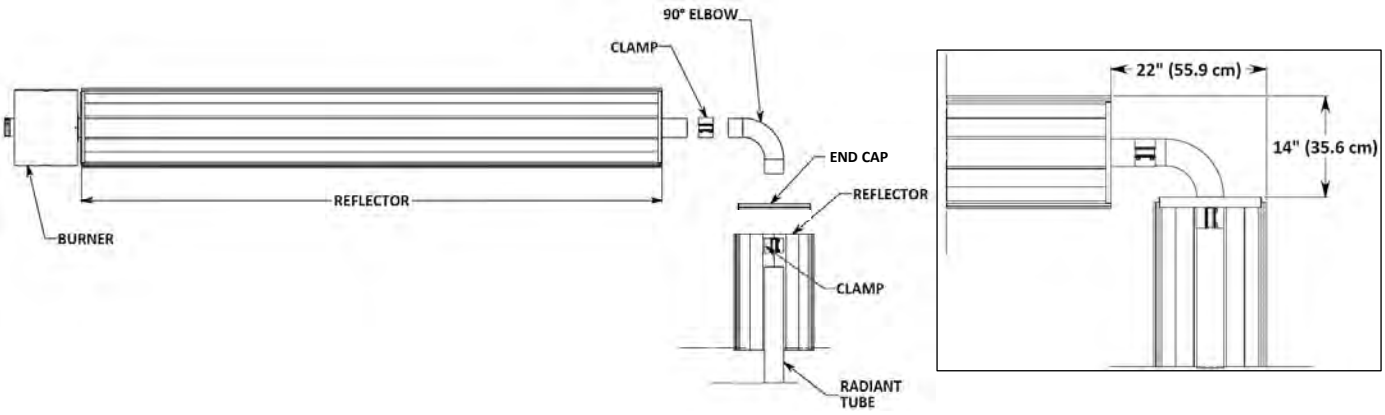

Figure 25. 90° ELBOW KIT INSTALLATION

E. 180° U-BEND KIT (PH-50A & PH-75A MODELS)

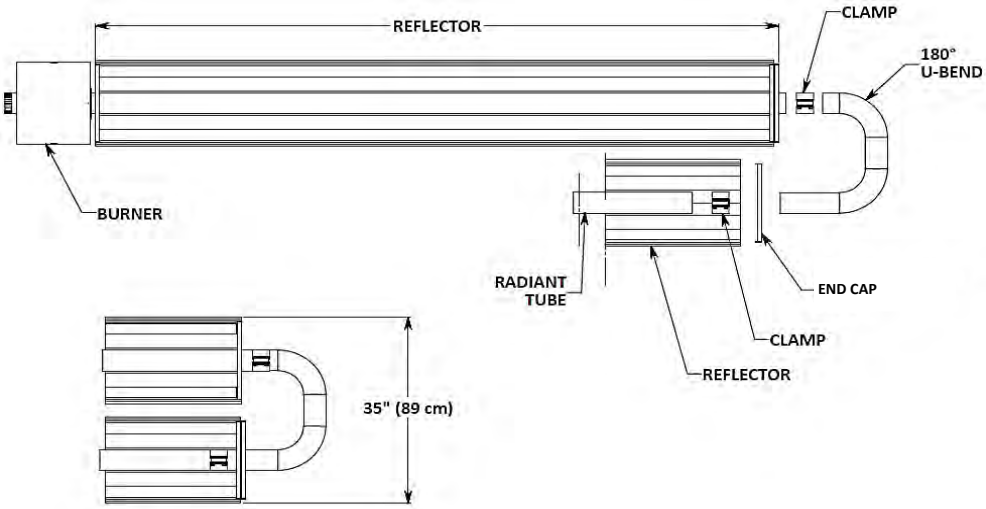

Figure 26. 180° U-BEND KIT INSTALLATION

15.0 VENTING REQUIREMENTS

⚠ **WARNING:** In all unvented installations, **DO NOT** install multiple units in such a manner that the intake of one heater is next to the exhaust end of another heater. This condition will cause combustion products to enter the air intake and can result in property damage, heater damage and an unsafe operating condition. Units must have clean air and proper ventilation for operation.
If in doubt regarding the orientation of heaters in a specific layout, contact the factory for assistance.

In all applications, whether connecting external venting or using an unvented method as described below, venting of the unit must comply with installation code ***Natural Gas and Propane Installation Code, CSA B149.1*** or latest edition. In the USA, the ***National Fuel Gas Code, ANSI Z223.1/NFPA 54***, current edition or local codes.

A. Select exhaust point:
   A vent shall not terminate:
   a. within 6 feet (1.8 m) of a mechanical air supply inlet to a building;
   b. above a meter/regulator assembly within 3 feet (0.9 m) horizontally of the vertical center line of the regulator;
   c. within 6 feet (1.8 m) of any gas service regulator vent outlet;
   d. less than 1 foot (0.3 m) above grade level;
   e. less than 7 feet (2.1 m) above a paved sidewalk or a paved highway;
   f. within 3 feet (0.9 m) of a window or door which can be opened in any building, any non-mechanical air supply inlet to any building or the combustion air inlet or any other appliances.
      i. NOTE: May be reduced to 1 foot for inputs up to 100,000 BTUH (30 kW).

   In the USA.: The National Fuel Gas code, ***ANSI Z223.1/NFPA 54***, specifies a 4-foot (1.22 m) vent terminal clearance from gas and electrical meters, regulators and relief equipment.

B. The vent terminal must be installed at a height sufficient to prevent any blockage from snow (if applicable).
C. Protect building materials from any degradation that may be caused by flue gases.
D. Support vent to prevent sagging (if applicable).

NOTE: A small amount of condensation may occur from the heater when it starts the heating cycle. The condensation will stop once the heater warms up. The minimum run time for all models is 10 minutes to help prevent tube corrosion from condensation on heater cycle.

15.1 UNVENTED APPLICATIONS (ALL MODELS)

This appliance shall only be used in a well-ventilated space and shall not be used in a building, garage or any other enclosed or semi-enclosed space unless the space conforms to the specifications under the sections titled: "FOR UNVENTED INSTALLATIONS IN SEMI-ENCLOSED APPLICATIONS (ALL MODELS)" or "FOR VENTED INSTALLATIONS (PH-A SERIES/STANDARD OUTPUT MODELS ONLY)"

If no other means of ventilation is provided (either mechanical or natural ventilation) in the area to be heated, and provided the exhaust gases have a means to exit the area above the level of the heater, an appliance may be installed with shelter no more inclusive than:

a) With walls on all sides, but no overhead cover.
b) Within a partial enclosure which includes an overhead cover and no more than two side walls. These side walls may be parallel, as in a breezeway, or at right angles to each other.
c) Within a partial enclosure which includes an overhead cover and three side walls, so long as 30 percent or more of the horizontal periphery of the enclosure is permanently open.

Adequate fresh, outdoor air must be able to enter the area and combustion products must have a means to exit the area above the level of the heater. If adequate air movement cannot be achieved, a condition can occur whereby the exhaust gases can displace the available air at ceiling level to such an extent that the heater may not operate properly and cause one or all of the following symptoms:

- Dangerous levels of carbon monoxide
- Black residue at the exhaust outlet (soot)
- Buildup of soot in the combustion chamber
- Backfiring
- Melting internal components
- Complete heater shutdown

For recessed ceiling applications such as tray ceiling or peak ceiling, refer to the section titled “FOR UNVENTED INSTALLATIONS IN SEMI-ENCLOSED APPLICATIONS (ALL MODELS)”.

15.2 FOR UNVENTED INSTALLATIONS IN SEMI-ENCLOSED APPLICATIONS (ALL MODELS)

If the heater is to be used or installed in a semi-enclosed application, which is more confined than as described under the section titled "UNVENTED APPLICATIONS (ALL MODELS)" but is not totally enclosed; adequate ventilation must be provided to dilute the products of combustion. This rate is a minimum of four (4) CFM (cubic feet per minute) or .12 cubic meters per 1,000 BTUH of installed heater input (per NFPA 54). Ventilation is to be provided via mechanical or natural gravity (convection). Provision must be provided for adequate fresh, outdoor air to enter the space through either fresh air ventilation inlets and/or mechanical supply fans combined with natural and/or mechanical exhaust. **If using mechanical ventilation and/or exhaust, it must be interlocked with the heater(s) in such a manner that the ventilation and/or exhaust and the heater(s) operate simultaneously.** Exhaust gases must have a means to exit the area above the level of the heater. Contact local authorities for verification of local code compliance prior to operation.

If adequate ventilation cannot be provided, a condition can occur whereby the exhaust gases can displace the available air at ceiling level to such an extent that the heater may not operate properly and cause one or all of the following symptoms:

- Dangerous levels of carbon monoxide
- Black residue at the exhaust outlet (soot)
- Buildup of soot in the combustion chamber
- Backfiring
- Melting internal components
- Complete heater shutdown

To eliminate this possible condition, do not install this heater in recessed ceiling applications that are not ventilated (if clarification of this type of installation is required, call the factory for further information prior to installation or purchase), or in situations where the products of combustion cannot escape or be ventilated at a rate sufficient to support combustion. Ventilation in tray ceiling or peak ceiling applications can be via mechanical ventilation, or natural convection though ventilation and exhaust inlets or grilles at a minimum rate of four (4) CFM (cubic feet per minute) or .12 cubic meters per 1,000 BTUH of installed heater input.

If you do not understand or are unfamiliar with the terminology or instruction as they are written, do not install this product until you contact the local authorities for clarification or approval.

15.3 FOR VENTED INSTALLATIONS (PH-A SERIES/STANDARD OUTPUT MODELS ONLY)

⚠ **WARNING:**
DO NOT ATTEMPT TO CONNECT ANY PH-HO SERIES/HIGH OUTPUT MODEL TO ANY VENTING.

If adequate ventilation cannot be provided by the methods previously described under the heading "FOR UNVENTED INSTALLATIONS IN SEMI-ENCLOSED APPLICATIONS (ALL MODELS)", an approved chimney or sidewall venting system must be used. ***Only PH-A Series/Standard Output Models (PH-40A, 50A, 75A, 80A, 100A and 125A) can be connected to an approved venting system.***

If you have a PH-HO Series/High Output model (PH-40 HO, PH-75 HO, PH-80 HO, PH-100 HO and PH-125 HO) and cannot provide adequate ventilation to safely operate the unit as per the previous heading ("FOR UNVENTED INSTALLATIONS IN SEMI-ENCLOSED APPLICATIONS (ALL MODELS)"), return unit to your supplier and purchase the appropriate model for this type of application.

If you do not understand or are unfamiliar with how to vent a gas fired appliance, do not install this product until you contact the local authorities for clarification or approval.

To connect to an approved chimney (by others) or side wall vent system (part #800208), remove the exhaust hood from the end cap by drilling out four (4) retaining rivets and discarding the hood. The exposed tubing is 3" inner diameter and can be connected to an approved venting system by following the instructions for your installation (see pages 33 to 38).

If a roof/chimney type installation is selected, also adhere to any instructions supplied by the manufacturer of the system.

16.0 VENTING PH-A/STANDARD OUTPUT MODELS

⚠ WARNING

PH-HO SERIES/HIGH OUTPUT MODELS CANNOT BE CONNECTED TO VENTING IN ANY SITUATION.

ANSI Z83.20-2016/CSA 2.34-2016
GAS PRODUCTS No. 405
January 1, 2019

APPROVED CATEGORY III Venting Method

In North America (Canada and the USA) the SPECIAL VENTING method, as detail below, is approved as a Category III venting system for Calcana installations where venting is required.

The venting system is to be provided by the installer. The use of readily available, single wall venting materials with a thickness of no less than 26 gauge is to be used. If 26 gauge "C-vent" or galvanized "stove pipe" is selected, each joint will need to be sealed with high temperature silicone as prescribed below, as well as the connection will require a minimum of three (3) #8 sheet metal or self-tapping screws to be used in a pattern such that each screw is installed at a distance that is equal between the number of fasteners selected. If material other than the aforementioned is employed, connect sections of material in such a fashion that each connection is secure and sealed. A minimum 36" (91 cm) length of 3" (7.62 cm) (models PH-40A, PH-50A, PH-75A) or 4" (10 cm) (models PH-40A, PH-50A, PH-75A, PH-80A, PH-100A, PH-125A) single wall material, with a thickness no less than 26 gauge is to be installed at the exhaust end of heater. This length can include elbows. If a portion of venting is to pass through a wall, installer can continue the single wall vent so long as an approved combustible wall thimble is used to provide adequate clearance to combustibles, or "B-vent" (and related accessories) can be used. If a portion of the venting is to pass through a roof, the installer is to use "B-vent" (and related accessories) for these sections. Use an approved chimney cap for vertical installations and an approved high wind terminal for horizonal installations, as described on page 35. The installer is to adequately support the vent system to prevent sagging in a manner that is in accordance with codes for the area.

The installer is to ensure all flue joints are sealed. Use only suitable products equal to General Electric RTV106 or Permatex 81160 High-Temp Red RTV, Red High Temperature Silicone Adhesive Sealant (not supplied). Apply a minimum of ¼" x ¼" (6.35 mm x 6.35 mm) bead of silicone to each joint, and to each seam. The bead should be applied to venting material with a smaller diameter as compared to the larger opening of the mating material or in some instances, clamp, in such a fashion that when the joint is secured, the silicone is squeezed between the two materials to form a sealed connection. Apply additional silicone if needed to accomplish a sealed joint or seam.

Follow the silicone manufacturer's instructions for curing, and after the material has been cured, the installer is to perform a leak test on the venting system. A soap and water solution test, on the venting installed inside the occupied space, can be used. If seamed, where 26 gauge "C-vent" material is used, seal seam(s) with RTV high temperature silicone. Once the installer is satisfied that the venting system is sealed, the heater can be placed in permanent operation.

16.1 HORIZONTAL AND VERTICAL VENTING APPLICATIONS

Venting of the unit must comply with the installation codes ***Natural Gas and Propane Installation Code, CSA B149.1*** or latest edition. In the USA, the ***National Fuel Gas Code, ANSI Z223.1/NFPA 54***, current edition or local codes.

A. Select exhaust point:

   A vent shall not terminate:

   a. within 6 feet (1.8 m) of a mechanical air supply inlet to a building;
   b. above a meter/regulator assembly within 3 feet (0.9 m) horizontally of the vertical center line of the regulator;
   c. within 6 feet (1.8 m) of any gas service regulator vent outlet;
   d. less than 1 foot (0.3 m) above grade level;
   e. less than 7 feet (2.1 m) above a paved sidewalk or a paved highway;
   f. within 3 feet (0.9 m) of a window or door which can be opened in any building, any non-mechanical air supply inlet to any building or the combustion air inlet or any other appliances.
      i. NOTE: May be reduced to 1 foot for inputs up to 100,000 BTUH (30 kW).

   In the USA.: The National Fuel Gas code, ***ANSI Z223.1/NFPA 54***, specifies a 4-foot (1.22 m) vent terminal clearance from gas and electrical meters, regulators and relief equipment.

B. The vent terminal must be installed at a height sufficient to prevent any blockage from snow.
C. Protect building materials from any degradation that may be caused by flue gases.
D. Support vent to prevent sagging.

Ensure that all flue joints are sealed. Use only suitable products equal to General Electric RTV106 or Permatex 81160 High-Temp Red RTV, Red High Temperature Silicone Adhesive Sealant (not supplied).

For sidewall venting, the heater must not be connected to a separate chimney but must be installed using a venting system as described in this manual.

If condensation in flue is present, then flue should be insulated or shortened. Install according to Codes **CAN/CGA-B149.1**. In the USA, refer to ***ANSI Z223.1/NFPA 54 NATIONAL FUEL GAS CODE*** current edition.

NOTE: Refer to the **CAN/CGA-B149.1** code for venting two or more heaters into one common vertical chimney. In the USA, refer to ***ANSI Z223.1/NFPA 54 NATIONAL FUEL GAS CODE*** current edition.

NOTE: A small amount of condensation may occur from the heater when it starts the heating cycle. The condensation will stop once the heater warms up. Ensure venting is sealed adequately. The minimum run time for all models is 10 minutes to help prevent tube corrosion from condensation on heater cycle.

MAXIMUM LENGTHS FOR HORIZONTAL AND VERTICAL VENTING

Maximum venting lengths, inclusive of any venting u-bends or elbows, must be maintained.

IMPORTANT NOTE: Each 180° venting u-bend is equivalent to 20 feet in the overall exhaust length, each 90° venting elbow is equivalent to 10 feet in the overall exhaust length and each 45° venting elbow is equivalent to 5 feet in the overall exhaust length.

40,000 to 125,000 BTU Input: Maximum vent length is 45 feet (13.7 m) including any venting elbows or u-bends.

YOU MUST CONTACT THE FACTORY IF USING THE OPTIONAL 180° U-BEND KIT OR 90° U-BEND KIT ONLY AVAILABLE FOR PH-A SERIES/STANDARD OUTPUT MODELS (PH-50A, PH-75A, PH-80A, PH-100A AND PH-125A) TO ENSURE PROPER HEATER AND EXHAUST LENGTHS ARE MAINTAINED.

A. **HORIZONTAL VENTING: SINGLE UNIT**

OPTION A: With PH-A Series/Standard Output models, for horizontal sidewall venting a single unit, use 4" (10.16 cm) "B-Vent" equal to DuraVent pin# 4GV36 in combination with an approved combustible wall thimble is used to provide adequate clearance to combustibles, a "B-Vent" to "C-Vent" (single wall) adaptor equal to DuraVent pin #4GVC, and high wind vent terminal equal to DuraVent pin# 4GVVTH.

To connect venting, remove exhaust hood from end cap by drilling out four (4) retaining rivets and discarding the hood. The exposed tubing is 3" inner diameter and can be connected to an approved venting system.

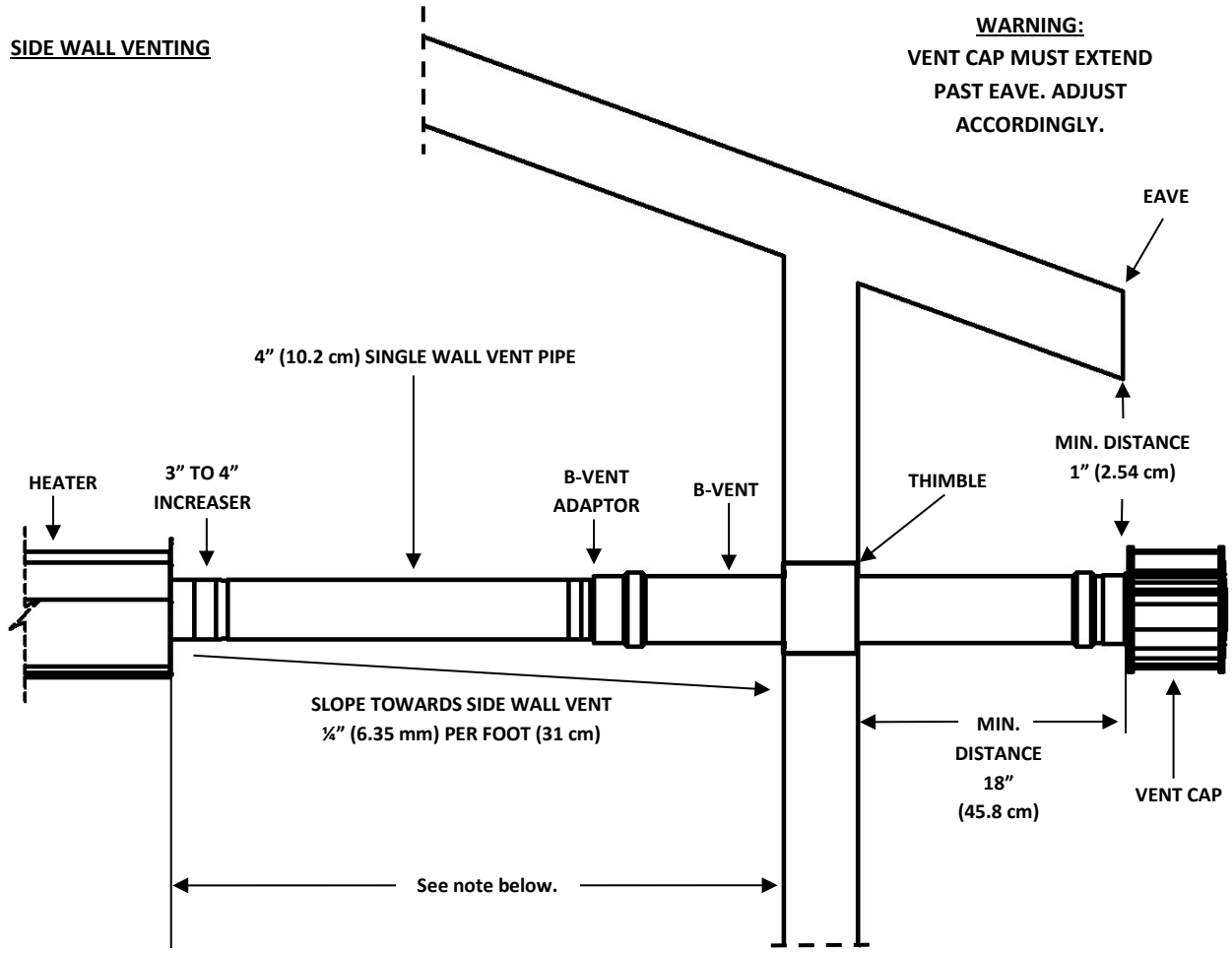

NOTE: 40,000 - 125,000 BTUH input

MAXIMUM DUCT LENGTH IS 45' (13.7 m).

DEDUCT 10' (3 m) FOR EVERY 90° ELBOW USED AND 5' (1.53 m) FOR EVERY 45° ELBOW USED

Figure 27. 4" SIDE WALL VENTING, SINGLE UNIT

NOTE: ENSURE THAT ALL FLUE/EXHAUST JOINTS ARE SEALED. USE ONLY SUITABLE PRODUCTS EQUAL TO GENERAL ELECTRIC RTV106 OR PERMATEX 81160 HIGH-TEMP RED RTV, RED HIGH TEMPERATURE SILICONE ADHESIVE SEALANT (NOT SUPPLIED).

OPTION B: For models PH-40A, PH-50A and PH-75A, installer can use material equal to Calcana 3” x 16-gauge sidewall vent kit part #800208. 3” 90-degree exhaust elbows (PIN #3200745) are not included.

To connect venting, remove exhaust hood from end cap by drilling out four (4) retaining rivets and discarding the hood. The exposed tubing is 3" inner diameter and can be connected to an approved venting system.

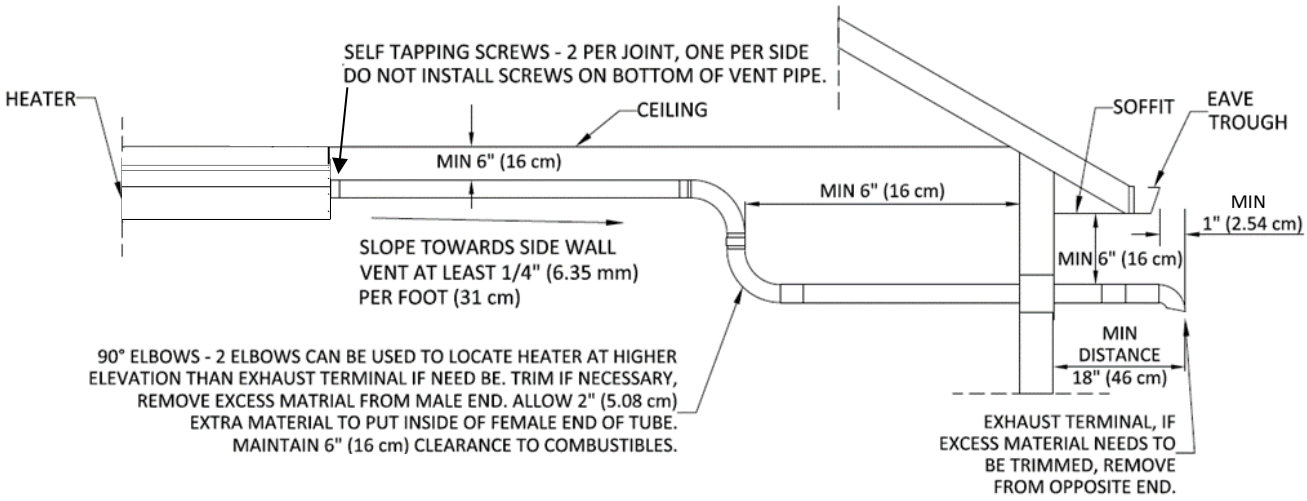

NOTE: VENT PIPE CAN BE TRIMMED IF NEEDED. CUT EXCESS MATERIAL AS REQUIRED. MAINTAIN 6” (16 cm) CLEARANCE TO COMBUSTIBLES.

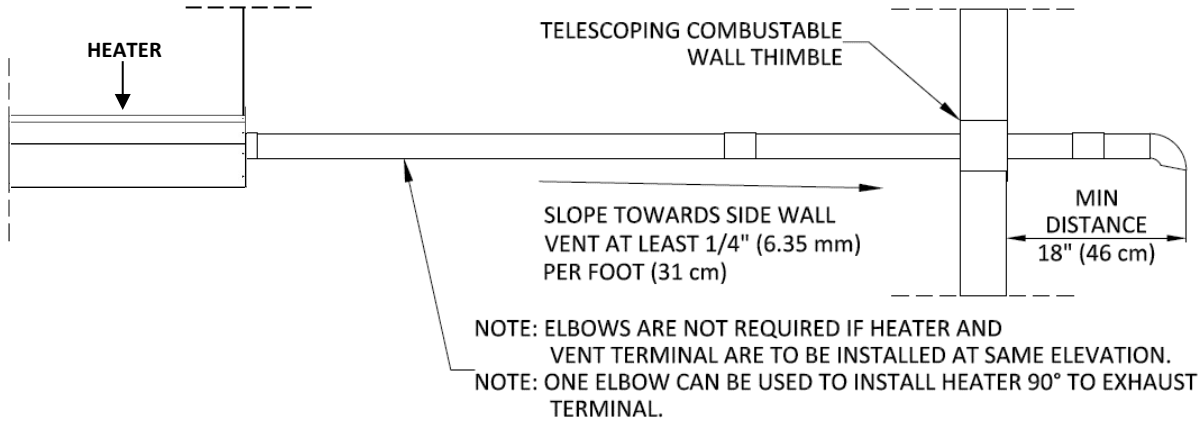

Figure 28. 3” SIDE WALL VENTING, SINGLE UNIT

NOTE: ENSURE THAT ALL FLUE/EXHAUST JOINTS ARE SEALED. USE ONLY SUITABLE PRODUCTS EQUAL TO GENERAL ELECTRIC RTV106 OR PERMATEX 81160 HIGH-TEMP RED RTV, RED HIGH TEMPERATURE SILICONE ADHESIVE SEALANT (SUPPLIED WITH PIN #800208).

NOTE: Maximum duct length is 45' (13.7 m). Deduct 10' (3 m) for every 90° elbow and 5' (1.52 m) for every 45° elbow used.

B. **ROOF EXHAUST: SINGLE UNIT**

Use 'B' style chimney. To connect venting, remove exhaust hood from end cap by drilling out four (4) retaining rivets and discarding the hood. The exposed tubing is 3" inner diameter and can be connected to an approved venting system.

SIDE VIEW

WARNING: ENSURE VENT CAP IS NOT OBSTRUCTED BY SNOW. ADJUST ACCORDINGLY.

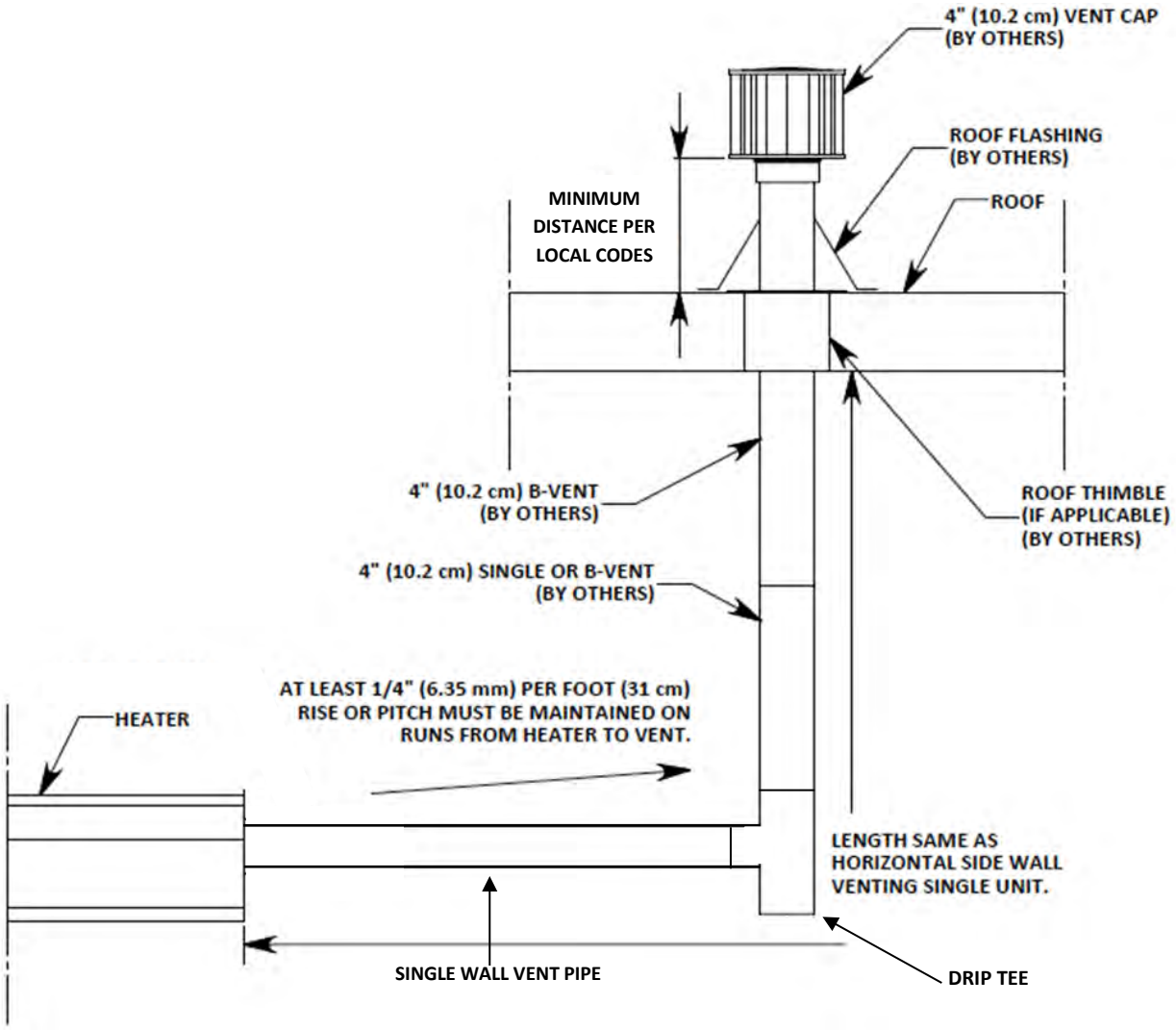

Figure 29. VERTICAL VENTING, SINGLE UNIT

C. **ROOF EXHAUST: TWO OR MORE UNITS**

Use 'B' style chimney. To connect venting, remove exhaust hood from end cap by drilling out four (4) retaining rivets and discarding the hood. The exposed tubing is 3" inner diameter and can be connected to an approved venting system.

NOTE: For venting of two or more heaters into one common chimney, in Canada refer to the ***Natural Gas and Propane Installation Code, CSA B149.1*** or latest edition and in the USA, the ***National Fuel Gas Code, ANSI Z223.1/NFPA 54*** or latest edition.

Units that are commonly vented must be controlled by the same line voltage thermostat.

TWO OR MORE UNITS INTO A COMMON CHIMNEY – SIDE VIEW

WARNING: ENSURE VENT CAP IS NOT OBSTRUCTED BY SNOW. ADJUST ACCORDINGLY.

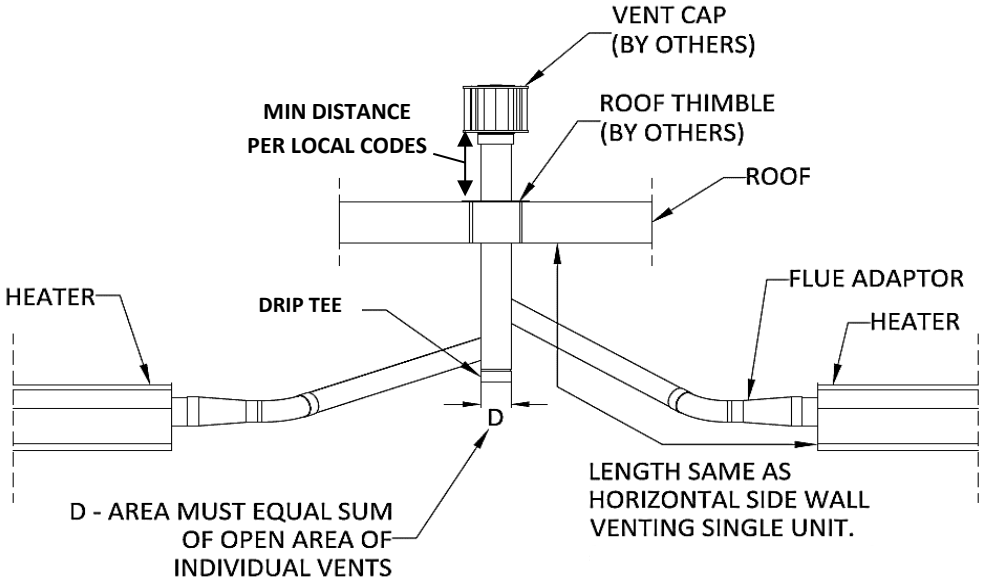

Figure 30. TWO OR MORE UNITS INTO A COMMON CHIMNEY – SIDE VIEW

TWO OR MORE UNITS INTO A COMMON CHIMNEY – TOP VIEW

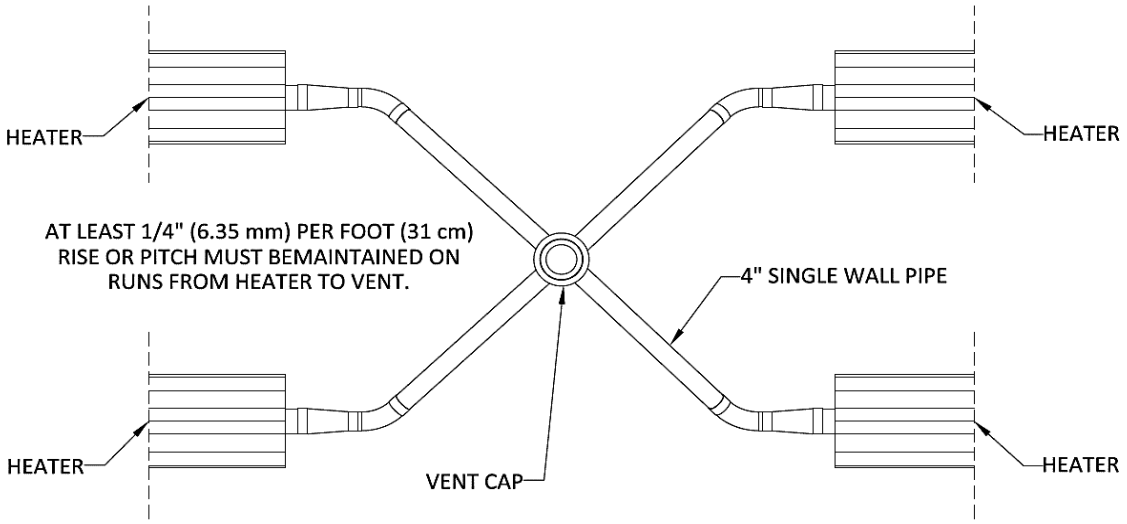

Figure 31. TWO OR MORE UNITS INTO A COMMON CHIMNEY – TOP VIEW

17.0 GAS PIPING

⚠ **WARNING:** All gas work MUST be performed by qualified/licensed personnel with adequate training and experience in this field.

⚠ **WARNING:** Use only the type of gas for which the heater is equipped, as identified on the heater rating plate. Using the wrong gas could create a hazard, resulting in damage, personal injury, or death.

In Canada, refer to the ***Natural Gas and Propane Installation Code,*** **CSA B149.1 or latest edition** and in the USA, the ***National Fuel Gas Code, ANSI Z223.1/NFPA*** **54 or latest edition.**

a) Adequate supply of gas to the heater is required for it to produce the designed amount of heat output.
b) The gas meter must be large enough capacity to handle the extra consumption required by the heater.
c) The gas line must be of an adequate size to deliver the necessary amount of fuel to the unit.
d) If there is any question concerning a) or b) call your local gas company for further assistance.
e) Ensure that all piping is supported properly.
f) All connections must have a special sealing compound applied to them.
g) A drip leg must be installed before the heater to prevent contaminating matter interfering with the operation of the unit.
h) Check piping for leaks via pressure test. **Install a 1/8" (3.175 mm) NPT plugged tapping** immediately ahead of heater in gas supply. Use this location for test gauge. A soap and water test can be used to verify the location of any possible leak.

⚠ **WARNING: Do not use an open flame for testing!**

⚠ **WARNING:** For high pressure testing, disconnect heater(s) and shut-off cocks and cap off pipe for test. Failure to do so will damage pressure ratings on the above-mentioned equipment and cause a complete replacement of these parts.

⚠ WARNING:

The heater and its individual shutoff valve must be disconnected from the gas supply piping system during any pressure testing for that system at test pressures in excess of ½ PSIG.

The heater must be isolated from the gas supply piping system by closing its individual manual shutoff valve during any pressure testing of the gas supply piping system at test pressures equal to or less than ½ PSIG.

Refer to pages 40 and 41 for gas connection to the heater.

18.0 GAS CONNECTION

A. HARD PIPE

A hard pipe gas connection may be used where local building and gas codes permit and/or require. Contact local authorities for information regarding installation of hard pipe gas connections.

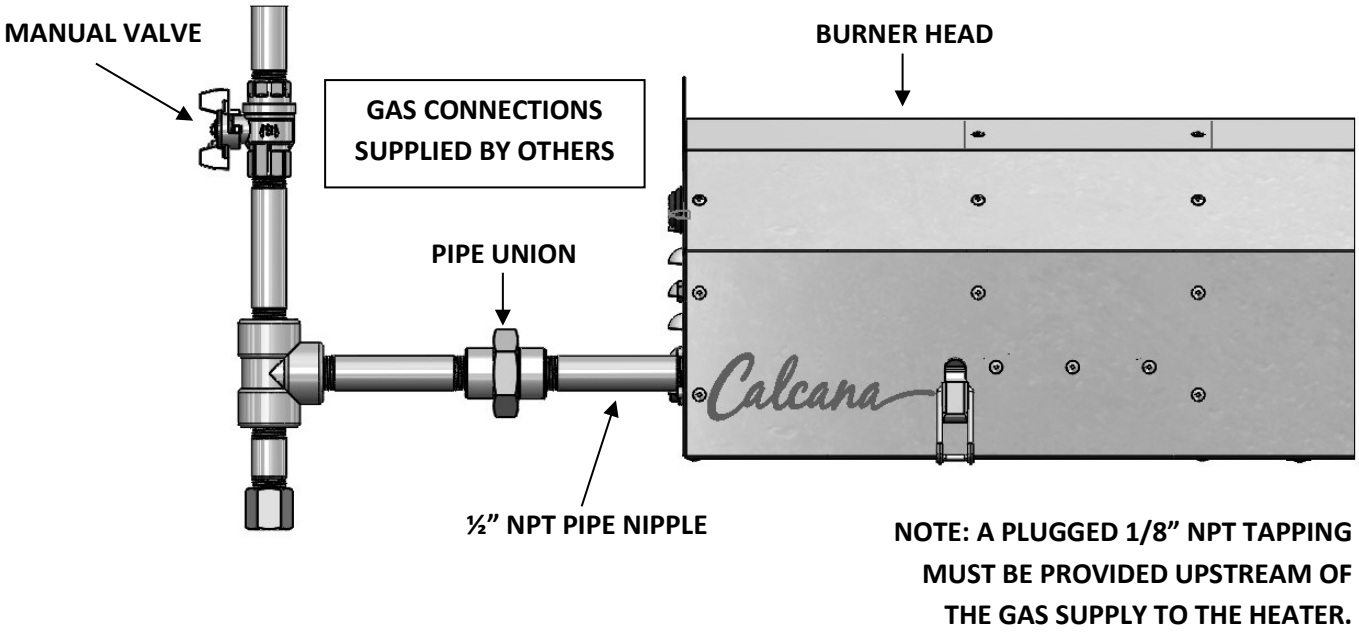

Figure 32. HARD PIPE INSTALLATION

B. FLEX CONNECTOR

⚠ WARNING:

FIRE AND/OR EXPLOSION HAZARD

Can cause property damage, severe injury, or death.

With each firing cycle, the radiant pipe will expand and contract which can cause the burner head to move horizontally with reference to the gas supply line.

If the gas connection is not installed in strict accordance as shown in Figure 33, a gas leak can occur resulting in an extremely unsafe condition.

"Certified connectors are recommended to be installed as shown, (Figure 33, Page 41) in one plane, and without sharp bends, kinks, or twists. The gas take off must be parallel to the burner gas inlet connection. "

(CSA)

CORRECT POSITIONS

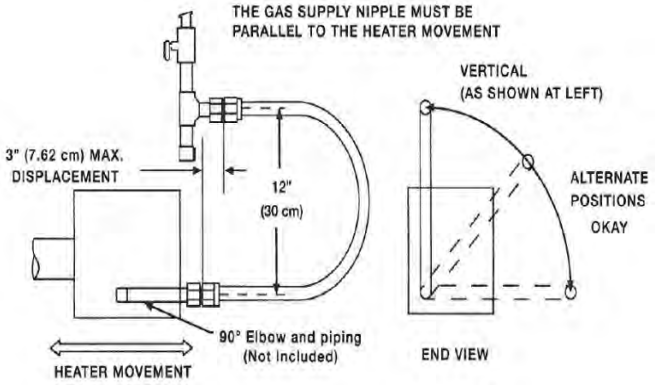

INCORRECT POSITIONS

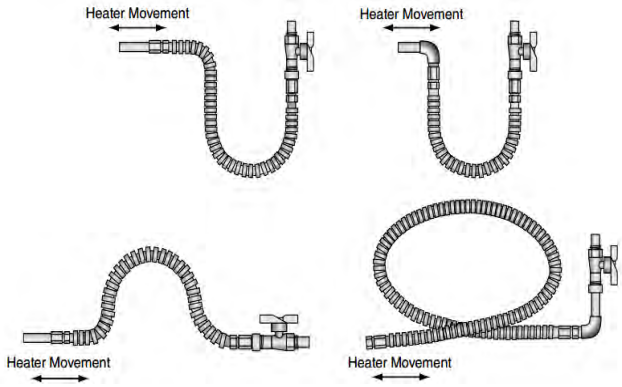

⚠ WARNING:

CONNECTOR MUST BE INSTALLED AS PER THE CONFIGURATION ILLUSTRATED ABOVE. USE ONLY THE 36" (90 cm) CONNECTOR OF ½" (1.27 cm) NOMINAL ID FOR LENGTHS FROM 10' (3 m) TO 50' (15.24 m).

IN CANADA: "A radiant tube-type infrared heater shall only be connected with a Type 1 hose connector that is (a) certified as being in compliance with the **Standard for Elastomeric Composite Hose and Hose couplings for Conducting Propane and Natural Gas, CAN/CGA 8.1** and (b) of a length of 36 +/- 6" (90 +/-15 cm)."

IN USA: Flexible Metallic connectors must be certified for use on a radiant tube-type infrared heater as per the **Standard for Connectors for Gas Appliances, ANSI Z21.24/CSA 6.10**.

Connector (not supplied) is available from manufacturer.

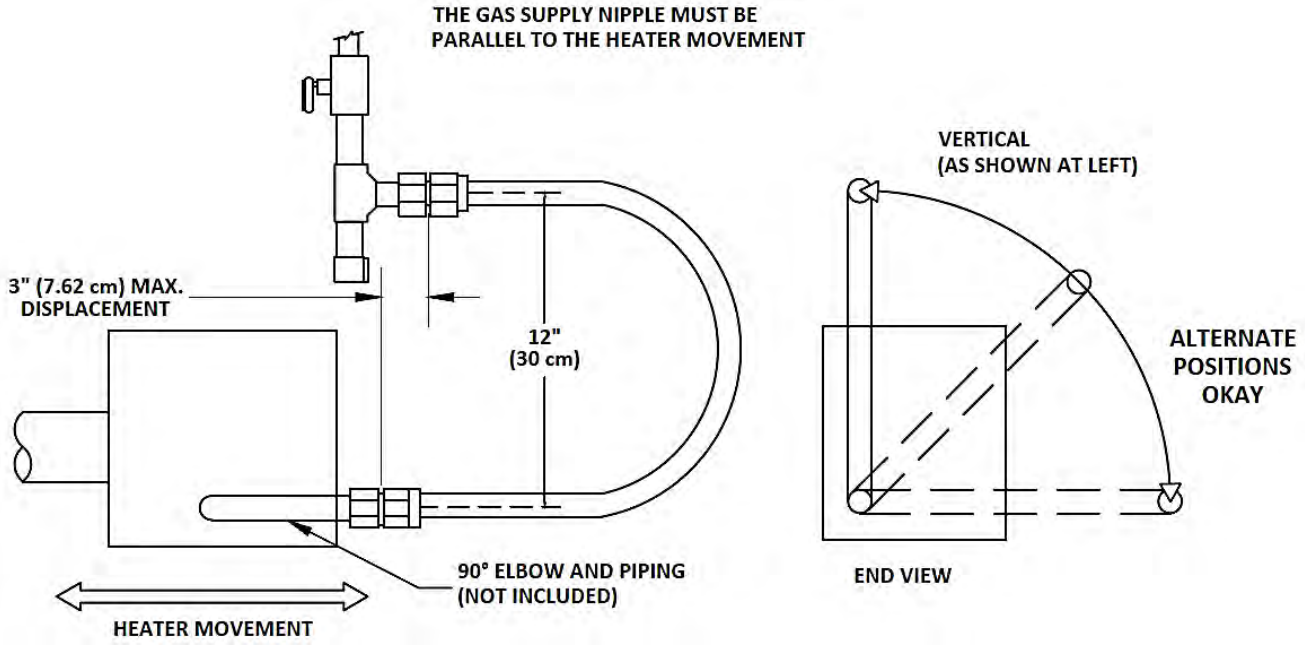

Figure 33. GAS LINE CONNECTION WITH CERTIFIED FLEXIBLE GAS CONNECTION

19.0 GAS INPUT RATE

⚠ WARNING:

Natural gas heating values can vary widely. It is the responsibility of the Installer to ensure that the input rate to the heater installed does not exceed the nameplate rating of the heater. Failure to do so can cause radiant tube failure, resulting in injury or death.

The maximum BTUH input capacity for each model is shown on the heater's rating plate and in the specification table. This input must not be exceeded.

The input shown may be used in geographic area where the elevation is from 0 to 4,500 feet (1,372 m) above sea level (Canada only) in accordance with **CGA 2.17-M91 (R2003**), no change required to main orifice. For installations above 4,500 (1,372 m) refer to ***Natural Gas and Propane Installation Code, CSA* B149.1** or latest edition, or contact the factory.

In the USA: For installations above 2,000 feet (610 m), the appliance shall be de-rated 4 percent (%) for each 1,000 feet (305 m) of elevation above sea level. The BTUH input depends on the calorific heating value of the gas, orifice size, and manifold pressure. Orifice sizes are based upon values of 1,000 BTUH/cubic foot (.028316 cubic meter) for natural gas and 2,500 BTUH/cubic foot (.028316 cubic meter) for propane.

⚠ WARNING:

NEVER ATTEMPT TO MODIFY THIS HEATER - FIRE, EXPLOSION, OR ASPHYXIATION MAY RESULT. If a malfunction is apparent, contact qualified service agency and/or gas utility for assistance.

How to Determine Gas Input Rate:

Where gas is metered, the input rate may be determined by the following method: contact the gas supplier, public utility company, or propane distributor to obtain the calorific gas value of the gas being used. When checking the gas input rate, any other gas burning appliances connected to the same meter must be completely off. The heater should be allowed to operate for 5 minutes before attempting to check the gas input rate.

To check the flow rate, observe the one cubic foot dial on the gas meter and determine the number of seconds required for the dial hand to complete one revolution (seconds to flow one cubic foot).

To determine the number of seconds per cubic foot that is necessary to achieve the correct input rate, use the following formula:

GAS VALUE X 3,600 seconds / DESIRED INPUT = SECONDS NEEDED

Example: 1,000 BTU gas with heater input 100,000 BTUH

Seconds for one cubic foot = 1,000 X 3,600 /100,000 = 36 seconds

If when clocking the meter, the one cubic foot dial makes a complete revolution in less time than was calculated that it should be de-rated. If it takes more time for the meter to make one revolution than was calculated, the unit is under-fired.

The orifice size must be changed to correct an over-fired or under-fired condition. If it is determined that different orifices are needed, please contact your distributor for assistance in selecting the correct replacement.

20.0 ELECTRICAL CONNECTION

IMPORTANT NOTICE:

All patio heaters are supplied from the factory with 120-volt input wiring and a low voltage/line voltage thermostat. Note that 24-volt input patio heaters are special order items and require an external 24-volt transformer (not supplied) to operate.

Refer to rating plate on heater for electrical specifications prior to connecting any electrical wires or power. All electrical connections must be made by a qualified/licensed experienced electrician.

Connecting incorrect wiring or power can result in electrical component damage or failures. Component failure or damages due to incorrect site wiring or shorts are not covered by warranty.

DO NOT use an extension cord as an electrical source for the heater.

> ⚠ **WARNING:** DO NOT operate the heater until it has been thoroughly installed, inspected and is ready for the initial fire-up.

NOTE: All connections and wiring must be made in accordance with ***Canadian Electrical Code, CSA C22.1*** or latest edition as well as/or local codes, conditions and authorities. In the USA, refer to ***National Electric Code, ANSI/NFPA 70*** or most current edition.

In Canada: Electrical equipment and wiring shall comply with the applicable provisions of the current *Canadian Electrical Code, CAN/CSA C22.1, Part I and Part II, and CAN/CSA C22.2 No.3, Electrical features of Fuel Burning Equipment.*

If any of the original wire supplied with the appliance must be replaced, it must be replaced with wiring material having a temperature rating of at least 105 degrees C (221 °F).

THERMOSTAT - PH-A SERIES/STANDARD OUTPUT MODELS ONLY:

A thermostat can be installed in indoor applications to control the heater. Locate thermostat in a convenient location away from drafts and on an inside wall that is ideally adjacent to the wall where the heater is mounted, but at a location that is not in the direct path of the heater's radiant heat.

If using a thermostat, DO NOT use thermostats that have heat anticipators in them. The heat anticipators will cause the unit to cycle unnecessarily, reducing its heating capacity, which can cause incomplete combustion and turn combustion byproducts to condensate. **A suitable thermostat can be purchased from Calcana (part # 3060225) for this heater.**

THERMOSTAT CONNECTION: USE THERMOSTAT EQUAL TO WHITE RODGERS/EMERSON MODEL 1G65-601 OR HONEYWELL LINE VOLTAGE MODELS T4098A or T410A, INSTALLED SUCH THAT THE THERMOSTAT CONTROLS THE VOLTAGE BEING SUPPLIED TO THE UNIT.

20.1 ELECTRICAL CONNECTION 120 VOLT

Refer to rating plate on heater for electrical specifications.

Supply adequate grounded electrical power supply to heater via watertight, outdoor rated electrical wiring. Fasten ground wire to grounding lug on frame of burner head and connect 120 volts to the black and white pigtail wires from the transformer.

> ⚠ **WARNING:** DO NOT operate the heater until it has been thoroughly installed, inspected and is ready for the initial fire-up.

NOTE: All connections and wiring must be made in accordance with ***Canadian Electrical Code, CSA C22.1*** or latest edition as well as/or local codes, conditions and authorities. Refer to wiring diagram on page 46. In the USA, refer to ***National Electric Code, ANSI/NFPA 70*** or most current edition.

If any of the original wire supplied with the appliance must be replaced, it must be replaced with wiring material having a temperature rating of at least 105 degrees C (221 °F).

The heater, when installed, must be electrically grounded in accordance with local codes or, in the absence of local codes, with **ANSI/NFPA 70**.

DO NOT use an extension cord as an electrical source for the heater.

ALL MODELS: REMOTE CONTROL PANEL
(Low voltage connection)

Locate the controller in a convenient location that is protected from water. Connect multi-strand, low voltage wires (not supplied) to panel.

Secure wiring accordingly and make final connection inside heater burner box compartment ensuring that the correct number on the terminal strip matches identically with the color wires on the controller: The terminals for the on/off switch, 3 and 4, are not location specific but must be wired only to 3 and 4 in the burner head.

ONLY USE APPROVED OUTDOOR WIRE.
Use 18 gauge for distances up to 50 feet and 16 gauge for distances greater than 50 feet.

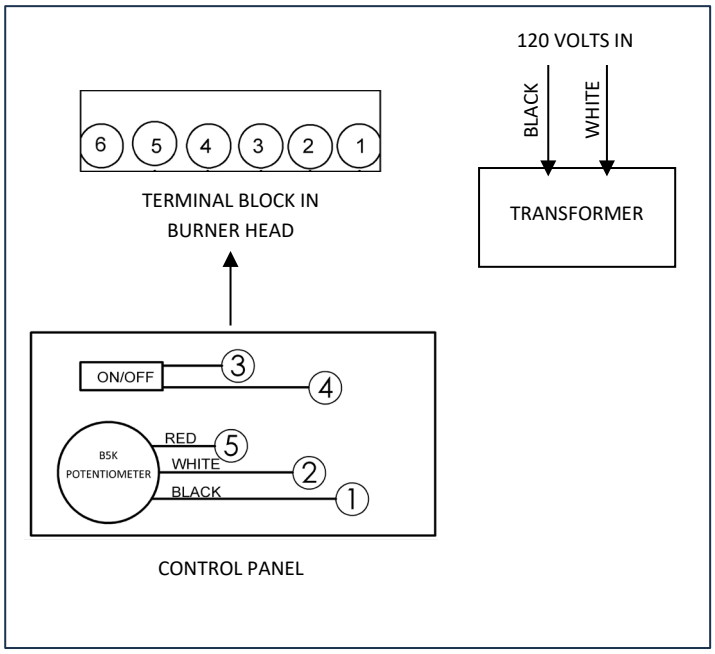

Figure 34. ELECTRICAL CONNECTIONS 120 VOLT

20.2 ELECTRICAL CONNECTION 24 VOLT

Alternate power supply required. All patio heaters are supplied from the factory with 120-volt input wiring and a low voltage/line voltage thermostat. Note that 24-volt input patio heaters are special order items and require an external 24-volt transformer (not supplied) to operate.

Locate a 24 VAC transformer near the 120-volt source.

The supply wire from the transformer to the heater must have adequate capacity and insulation temperature ratings for the total connected load. Use 18-gauge wire from the transformer to the heater for distances up to 50 feet. For distances greater than 50 feet use 16-gauge.

If any of the original wire supplied with the appliance must be replaced, it must be replaced with wiring material having a temperature rating of at least 105 degrees C (221 °F).

NOTE: All connections and wiring must be made in accordance with ***Canadian Electrical Code, CSA C22.1*** or latest edition as well as/or local codes, conditions and authorities. Refer to wiring diagram on page 47. In the USA, refer to ***National Electric Code, ANSI/NFPA 70*** or most current edition.

> ⚠ **WARNING:** DO NOT operate the heater until it has been thoroughly installed, inspected and is ready for initial fire-up.

ALL MODELS: REMOTE CONTROL PANEL
(Low voltage connection)

Locate controller in a convenient location that is protected from water. Connect multi-strand, low voltage wires to panel.

Secure wiring accordingly and make final connection inside heater burner box compartment making sure that the correct number on the terminal strip matches identically with the color wires on the controller: The terminals for the on/off switch, 3 and 4, are not location specific but must be wired only to 3 and 4 in the burner head.

ONLY USE APPROVED OUTDOOR WIRE.
Use 18 gauge for distances up to 50' and 16 for distances greater than 50 feet.

24 VAC POWER SUPPLY (BY OTHERS)
Connect to terminal leads #4 and #6 inside burner box.

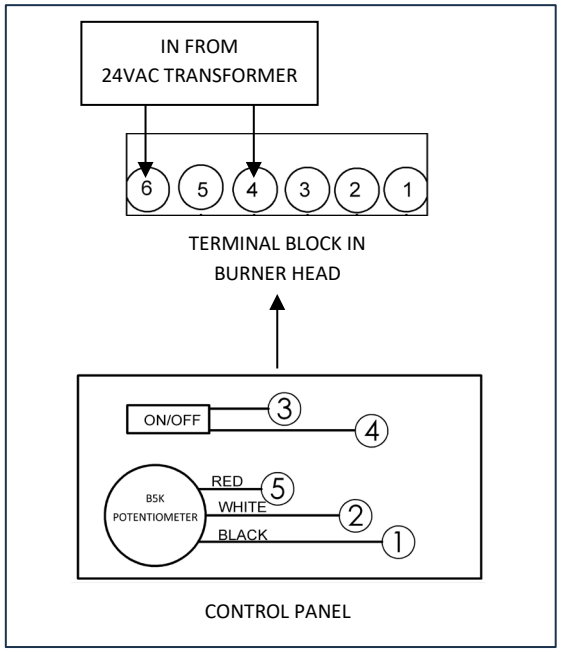

Figure 35. ELECTRICAL CONNECTIONS 24 VOLT

21.0 WIRING DIAGRAM

21.1 PH SERIES 120 VOLT WIRING DIAGRAM

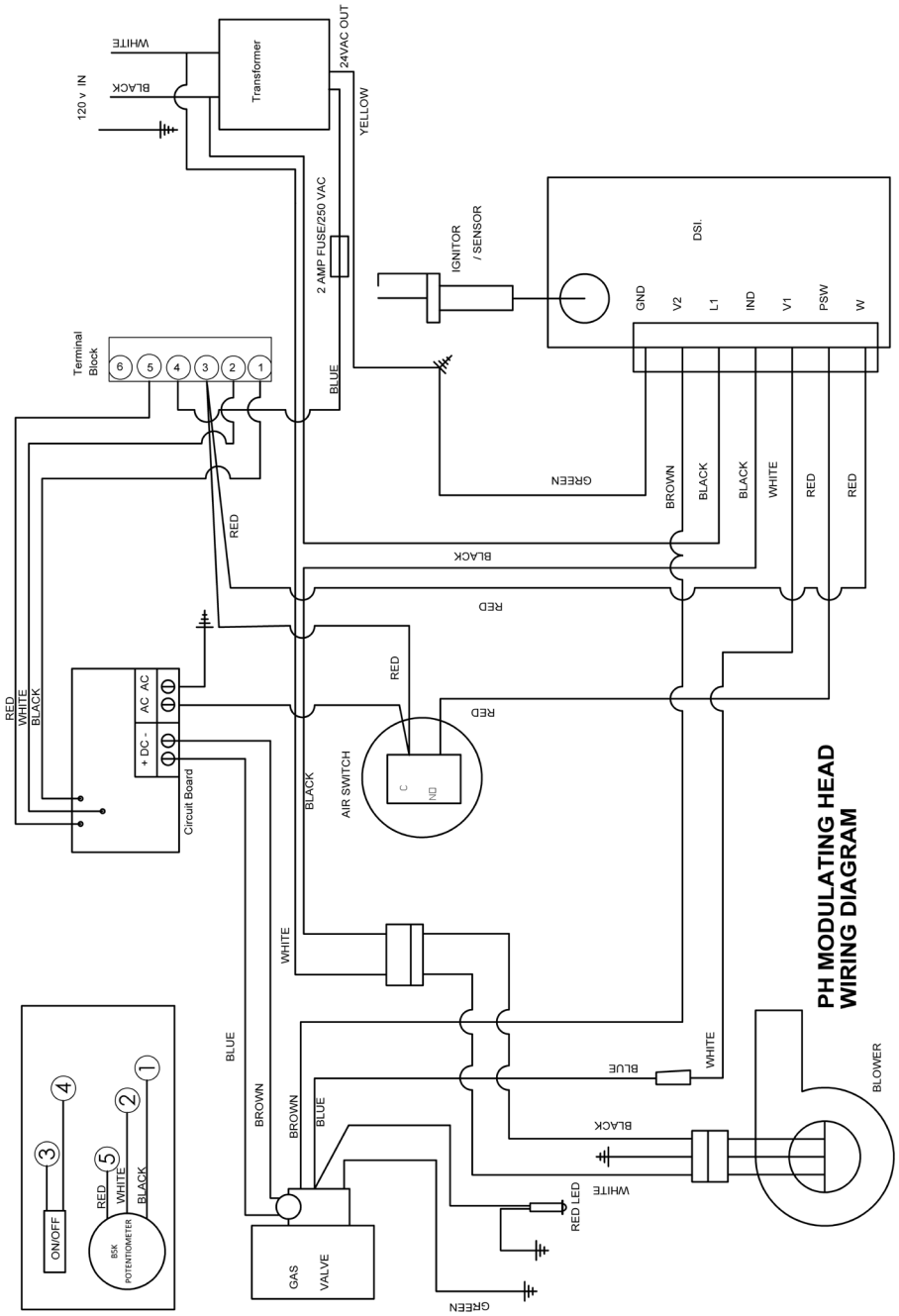

PH-A SERIES/STANDARD OUTPUT MODELS ONLY:

THERMOSTAT CONNECTION: USE THERMOSTAT EQUAL TO WHITE RODGERS/EMERSON MODEL 1G65-601 OR HONEYWELL LINE VOLTAGE MODEL T4098A or T410A, INSTALLED SUCH THAT THE THERMOSTAT CONTROLS THE VOLTAGE BEING SUPPLIED TO THE UNIT.

Figure 36. WIRING DIAGRAM 120 VOLT

If any of the original wire supplied with the appliance must be replaced, it must be replaced with wiring material having a temperature rating of at least 105 degrees C (221 °F).

21.2 PH SERIES 24 VOLT WIRING DIAGRAM

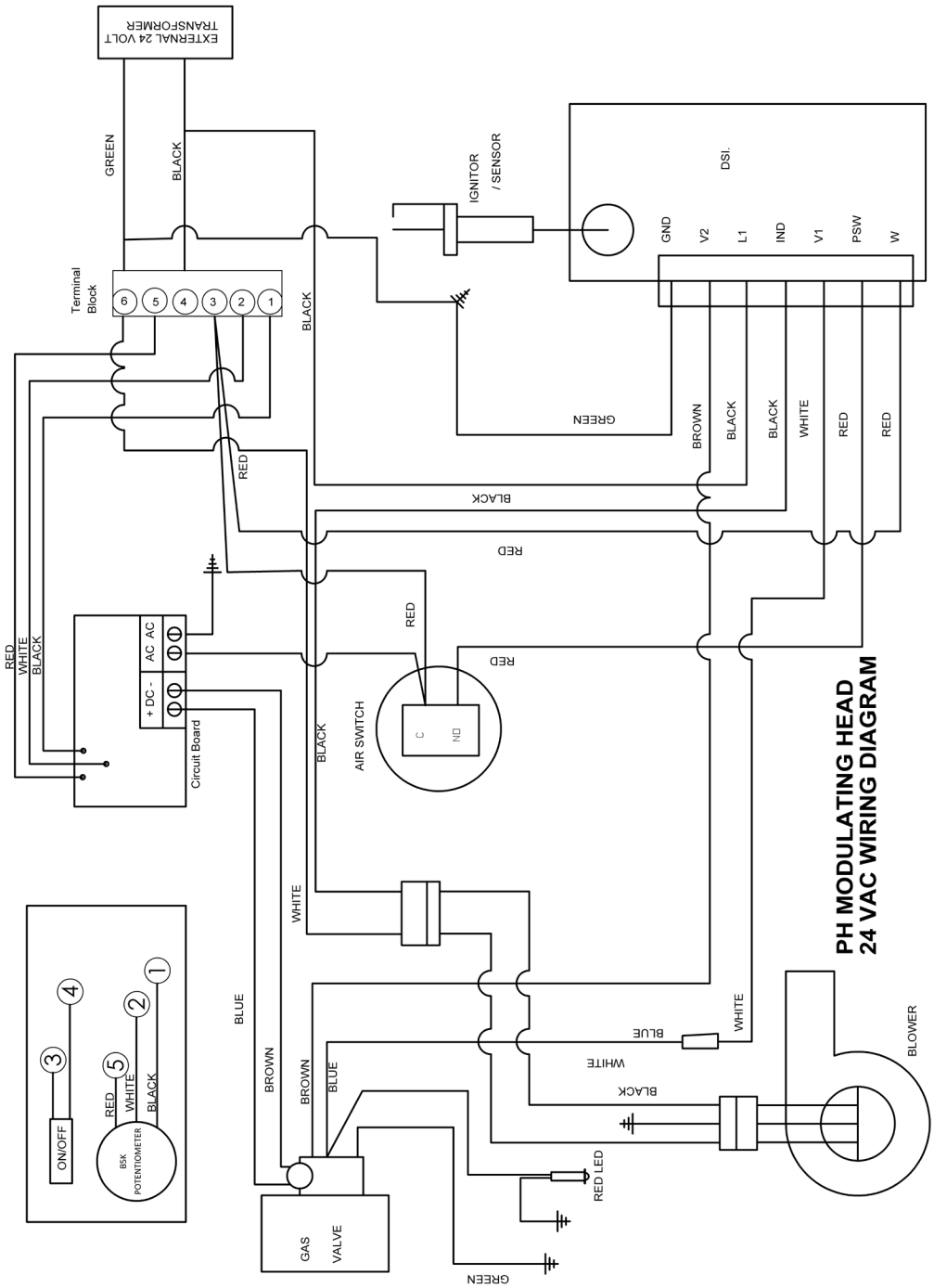

PH-A SERIES/STANDARD OUTPUT MODELS ONLY:

THERMOSTAT CONNECTION: USE THERMOSTAT EQUAL TO WHITE RODGERS/EMERSON MODEL 1G65-601 OR HONEYWELL LINE VOLTAGE MODEL T4098A or T410A, INSTALLED SUCH THAT THE THERMOSTAT CONTROLS THE VOLTAGE BEING SUPPLIED TO THE UNIT.

Figure 37. WIRING DIAGRAM 24 VOLT

If any of the original wire supplied with the appliance must be replaced, it must be replaced with wiring material having a temperature rating of at least 105 degrees C (221 °F).

22.0 INITIAL START-UP

⚠ WARNING:

DO NOT ATTEMPT TO IGNITE HEATER BY HAND!!

Procedure:

a) Ensure the gas is turned on.
b) Check for any possible blockages in combustion air intake and exhaust areas of the unit.
c) Ensure all connections including venting material (where used) are properly fastened to the unit.
d) Ensure all options are attached securely.
e) Locate manifold pressure tap. Open the manifold pressure tap by using a small **flathead** screwdriver to turn the screw inside the port counterclockwise 1 turn. **DO NOT REMOVE THIS SCREW.**
f) Connect a manometer that registers pressure in inches of water column (" WC) to the manifold pressure tap.
g) Ensure electricity is on to unit. Turn the wall control switch to ON.
h) Check the flame port to see flame has established.
i) If flame is not established, turn the wall control switch to OFF for 5 seconds then turn it back ON or interrupt electrical supply to unit for 5 seconds, and allow unit to try again.
j) Verify gas input rate. See instructions on pages 50 to 51.
k) Turn off all electrical power to the system. Remove manometer and close the manifold pressure tap by turning the screw inside the port clockwise until closed using a small **flathead** screwdriver. DO NOT OVER TIGHTEN.
l) Ensure electricity is on to unit. Turn the wall control switch to ON.
m) Perform leak test.

NOTE: Some smoke might appear off the exchanger tube after it heats up for initial firing. Do not be alarmed. The smoke is just a small amount of oil on the surface of the tube from manufacturing. If smoke is excessive, 'air out' the area until smoke is removed.

NOTE: For PH-A SERIES/STANDARD OUTPUT MODELS, the heater will have a higher heat output by the burner head as compared to the exhaust end. This is normal.

NOTE: A small amount of condensation may occur from the heater when it starts the heating cycle. The condensation will stop once the heater warms up.

23.0 GAS VALVES

23.1 GAS VALVES, SIGMA SIT 845 MODULATING

1 On-off solenoid valve EV1.

2 On-off solenoid valve EV2.

3 Inlet pressure test point.

4 Outlet pressure test point.

5 Connection for pressure regulator / combustion chamber compensation.

6 Servo-pressure regulator.

7 Gas outlet pressure modulator.

8 Pilot outlet.

9 Main gas outlet.

10 Side outlet.

11 Slow opening device.

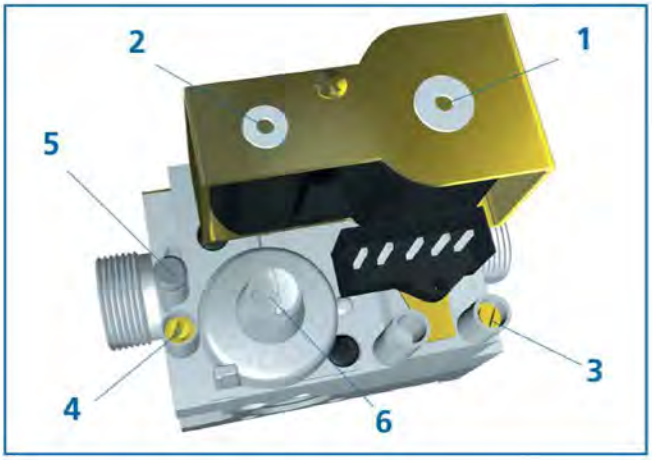

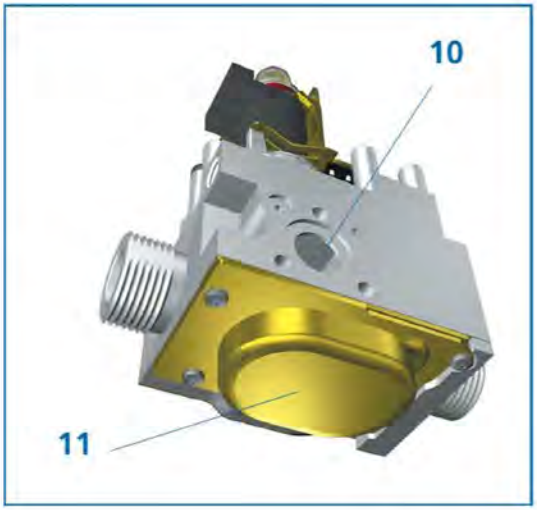

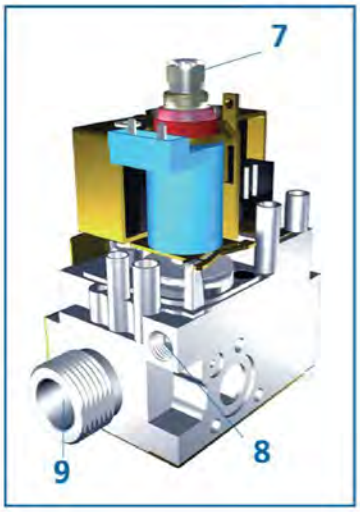

Figure 38. GAS VALVE & PRESSURE REGULATOR, SIGMA SIT 845 MODULATING

23.2 GAS VALVES, SIGMA SIT 845 - MANIFOLD ADJUSTMENT AND VERIFICATION PROCEDURE

⚠ WARNING ⚠

THE INSTALLER MUST VERIFY AND MAKE ANY REQUIRED ADJUSTMENTS TO THE MANIFOLD OPERATING PRESSURE ACCORDING TO THE INSTALLATION MANUAL AND RATING PLATE OF THIS HEATER.
FAILURE TO DO SO WILL VOID ALL WARRANTIES AND MAY CAUSE DAMAGE, INJURY AND/OR DEATH.
IF YOU DO NOT UNDERSTAND OR HAVE ANY QUESTIONS CONCERNING THESE INSTRUCTIONS, CONTACT CALCANA AT 800-778-6729 AND DO NOT PROCEED WITH ANY MANIFOLD VERIFICATION OR ADJUSTMENT.

Only licensed/qualified and insured contractors trained in the appropriate trade or technical fields (Gasfitting-HVAC-Electrician) shall perform any work related to the installation and/or service of this heater. Person(s) who service and/or install this unit accept full liability and responsibility for its operation.

TOOLS REQUIRED

- Small Flathead Screwdriver
- 10 mm Wrench
- Manometer that measures inches of water column (" WC)

INITIAL STEPS:

1. Verify the heater being installed matches the fuel type available on site, including any necessary adjustments for high altitude. Ensure adequate fuel supply to operate all gas appliances, including the heater(s), at their maximum rated capacity simultaneously. Verify that gas lines and pressure regulators can provide the correct line pressure within the required range for your fuel type (5" to 14" WC for natural gas and 12" to 14" WC for propane), with all gas appliances operating at the same time. If the required line pressures cannot be maintained during use, you won't be able to verify or adjust the manifold pressure, leading to improper heater operation. If fuel pressure is too low, the heater will not have enough fuel to achieve its maximum heat output and if the fuel pressure is too high, the valve can be damaged.
2. Ensure all gas-fired appliances on the same gas line, excluding the heater, are on and operating simultaneously. Otherwise, an inaccurate reading of manifold pressure may occur.
3. Ensure the heater is turned off and not operating when you begin this process.
4. The control panel must be installed and connected to the heater prior to initiating this procedure.
5. ***START BY*** opening the service door and identifying the location of the gas valve and the modulator plug.

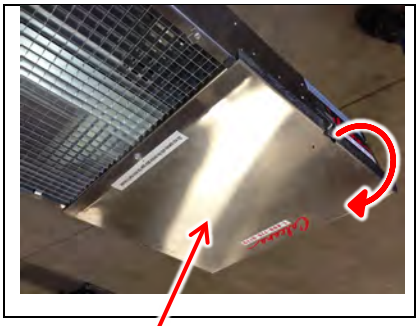

SERVICE DOOR

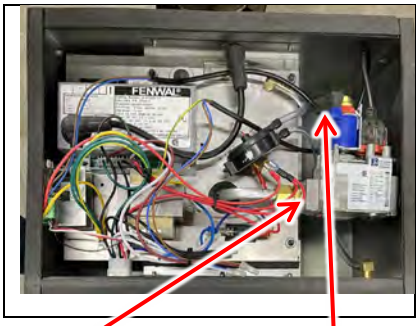

GAS VALVE **MODULATOR PLUG**

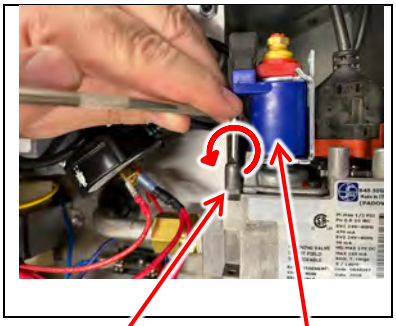

MANIFOLD PRESSURE TAP

6. Locate manifold pressure tap. Open the manifold pressure tap by using a small **flathead** screwdriver to turn the screw inside the port counterclockwise 3 turns. **DO NOT REMOVE THIS SCREW.**
7. Connect a manometer that registers pressure in inches of water column (" WC) to the manifold pressure tap.

FOR HIGH PRESSURE VERIFICATION and/or ADJUSTMENT:

CAUTION: Always adjust the high pressure setting first.

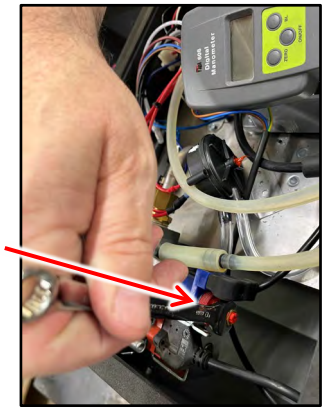

8. Using the wall control, turn on the heater, set the dial to high and take pressure reading. The required manifold pressure on the high setting for natural gas is 3.5“ WC and for propane is 10.5” WC. Manifold pressure information is also located on the rating plate affixed to the side of heater near the service lid.
9. If an adjustment is needed, use a 10mm wrench to turn the adjustment nut counterclockwise to lower pressure and clockwise to increase pressure.
10. Once proper pressure is confirmed, turn off the heater, and proceed to step 11) for low pressure verification and/or adjustment instructions.

FOR LOW PRESSURE VERIFICATION and/or ADJUSTMENT:

CAUTION: Always adjust the high pressure setting first.

11. Remove the modulator plug from the modulator (this will disconnect the potentiometer on the wall control from the valve). Using the wall control, turn on the heater, and take pressure reading. The required manifold pressure on the low setting for natural gas is 1.25“ WC and for propane is 5.25” WC.

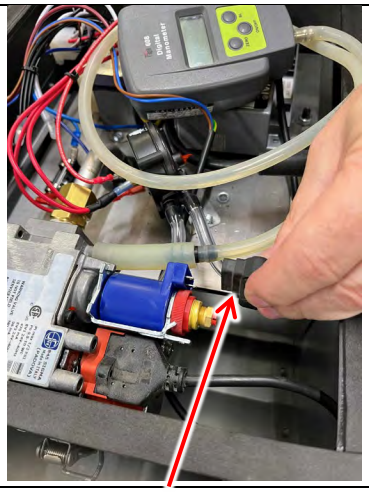

Modulator Plug

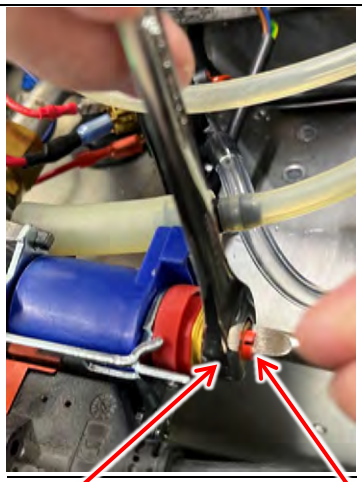

Adjustment Nut Adjustment Screw

12. If adjustment is needed, hold the high-pressure adjustment nut in place with a 10mm wrench. Use a small **flathead** screwdriver to adjust the low-pressure adjustment screw (bright orange plastic head). Turn counterclockwise to lower pressure and clockwise to increase pressure.

FINAL STEPS:

13. Once proper pressure is confirmed, turn off the heater, remove the manometer, and use a small **flathead** screwdriver to turn screw inside brass fitting clockwise until tight. **DO NOT OVER TIGHTEN.**

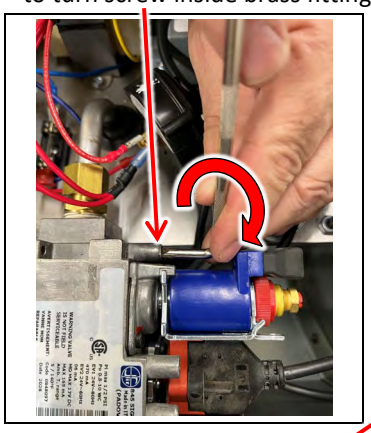

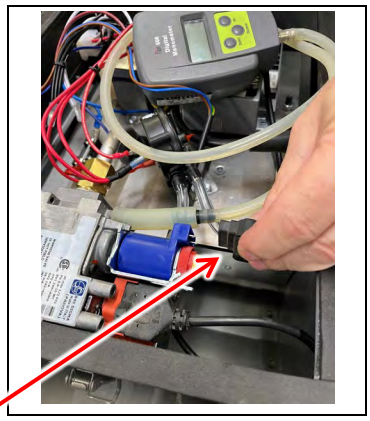

14. Replace the modulator plug and insert the screw.
15. Close and secure the service lid

24.0 FUEL CONVERSION

24.1 CONVERSION KIT FOR VARIABLE INPUT GAS VALVES

The conversion shall be carried out in accordance with the requirements of the provincial/state authorities having jurisdiction and in accordance with the requirements as follows:

CANADA: ***Natural Gas and Propane Installation Code, CSA B149.1*** or latest edition.
USA: ***National Fuel Gas Code, ANSI Z223.1/NFPA 54***, or latest edition.

⚠ **WARNING:** This conversion kit shall be installed by a qualified service agency in accordance with the manufacturer's instructions and all applicable codes and requirements of the authority having jurisdiction. If the information in these instructions is not followed exactly, a fire, explosion or production of carbon monoxide may result causing property damage, personal injury or loss of life. The qualified service agency is responsible for the proper installation of this kit. The installation is not proper and complete until the operation of the converted appliance is checked as specified in the manufacturer's instructions supplied with the kit. The installer of this conversion kit assumes full responsibility and liability for the installation of this conversion kit. If you do not understand these instructions or the information contained in the installation manual, DO NOT INSTALL THIS CONVERSION KIT OR OPERATE THE UNIT ASSOCATED WITH THIS GAS CONVERSION.

DIRECTIONS:

1) **CAUTION**: the gas supply shall be shut off prior to disconnecting the electrical power, before proceeding with the conversion.
2) Turn off electrical supply to heater
3) Disconnect gas supply line to heater
4) Disconnect electrical supply to heater
5) Disconnect ON/OFF control wires from heater
6) Remove service door that provides access to gas valve location.
7) Remove igniter assembly.
8) Disconnect the stainless-steel gas flex hose from the gas valve.
9) Remove the two mounting screws securing the gas valve and remove the valve.
10) Remove the 4 nuts securing the burner cap assembly and pull out the burner cap to access the orifice spud.
11) Use a deep wall socket to remove orifice spud.
12) Install the correct orifice for the fuel that you are converting to. **CHECK TWICE TO ENSURE.** Reference chart below.
13) Re-install all appropriate components, securing each part.
14) Reconnect the ON/OFF control wires to the heater.
15) Reconnect all gas and electrical supply lines to the heater.
16) Turn on the electrical and gas supply.
17) Sigma SIT 845 valves are adjustable for use with both natural gas and propane and require a manifold pressure adjustment.
    a. Locate gas valve and adjust manifold pressure to the required fuel type (see page 50 to 51). **CHECK TWICE TO ENSURE.**
    b. Verify Manifold pressure using a manometer. Manifold Pressure is: Natural Gas: High 3.5“ WC and Low 1.25” WC; Propane: High 10.5” WC and Low 5.25” WC. **Leak Test all Fittings Prior to Operation.**
18) Replace the service door.
19) When the conversion is complete, fill out the information as required on the enclosed conversion label.
20) **Attach completed label on or near the rating plate.**

Conversion Chart Corresponding Orifice Sizes

MODEL	FROM	TO	ORIFICE
PH-40A or PH-40 HO	Natural Gas	Propane	#51
PH-50A	Natural Gas	Propane	#48
PH-75A or PH-75 HO	Natural Gas	Propane	#42

MODEL	FROM	TO	ORIFICE
PH-40A or PH-40 HO	Propane	Natural Gas	#32
PH-50A	Propane	Natural Gas	3.3 mm
PH-75A or PH-75 HO	Propane	Natural Gas	#4.4

NOTE: CONVERSION KITS COME WITH A PREDRILLED ORIFICE AND CONVERSION LABEL.
CONVERSION KITS ARE FOR UNITS RATED FOR THE FOLLOWING LOCATIONS AND ELEVATIONS: **CANADA: 0 – 4,500 FT (1,372 m), USA: 0 – 2,000 FT (610 m)**
FOR INSTALLATIONS ABOVE THE DESIGNATED ELEVATIONS, CONTACT FACTORY.

24.2 EXAMPLE OF CONVERSION KIT LABEL
TO BE COMPLETED AS PER INSTRUCTIONS IN KIT

This appliance was converted on DAY: _____

MONTH: _____YEAR: _____

to Natural Gas: _____ Propane: _____

with Kit # _____

By: NAME: _____

COMPANY: _____

ADDRESS: _____

CITY/TOWN: _____ STATE/PRO: _____

TELEPHONE: _____

Orifice Size: _____ Leak Test Performed? Yes: _____

Manifold Pressure: Min_____ Max_____

Input: _____ Altitude: _____

(The name of the individual and organization making this conversion accepts the responsibility that this conversion has been properly made and has performed a leak test on the appliance prior to placing into service.) Locate label in a conspicuous location on the appliance near rating plate.

25.0 MAINTENANCE

Maintenance is required once a year. Annually inspect your heater, before the heating season starts. If the unit is in a dusty environment or by salt water, maintenance will be required more often. If dust conditions are extreme, monthly or weekly maintenance may be required.

⚠ WARNING:

Disconnect electrical supply to heater and shut off gas prior to inspection.

A. Check the exhaust diverter and louvered intake for blockage.
   - If unit is vented externally (PH-A Series/Standard Output Models ONLY), check the venting for blockage. Remove as necessary for cleanliness and then reinstall. Check for cracks or holes and replace them as necessary.
B. Open service door.
C. Check the blower motor and scroll for dirt and/or locked rotor. Remove dirt with compressed air or vacuum cleaner. If the rotor is locked, replace the assembly.
D. Ensure all the wiring is intact and in good condition.
E. Check the air switch and vinyl tubing and adjust or replace as necessary. To adjust, remove the silicone covering the set screw (used to prevent screw movement during normal heater operation) and use an allen key. Use maximum 3 full turns in or out (1/4 turn at a time), do not over adjust.
F. Check electrode for proper gap and cleanliness. Clean or replace as necessary.
G. Check the ignition system for spark. Replace as necessary.
H. Check exchanger tube for holes and/or cracks, dirt and/or deposits. Clean and/or replace as necessary.
I. Wash any dirt or dust off the unit with a soap and water solution.
J. Check any gas connections that were disconnected during maintenance for leaks. Use soap and water solution. Do not use flame.
K. Test fire unit by turning the wall control switch “ON” (or if using a thermostat, turn the dial up past room temperature to cycle the heater on). Ensure the unit is operating quietly and efficiently.
L. Periodically, visually check the burner cap through the view port to confirm proper operation.
M. Check all couplers for tightness and/or leakage.

⚠ WARNING:

Only qualified/licensed service people, trained to service gas fired heating equipment, are to perform repairs on this unit. All replacement parts MUST originate from the manufacturer of this heater in order not to void CGA/AGA certification and warranty. Safety devices are not allowed to be rendered inoperative.

⚠ WARNING:

Improper installation, adjustment, alteration, service, or maintenance can cause property damage, injury, or death. Read the installation, operating and maintenance instructions thoroughly before installing or servicing this equipment.

The heater area must be kept clear and free from combustible materials, gasoline and other flammable vapors and liquids. The flow of combustion and ventilation air to heater must not be obstructed.

26.0 SEQUENCE OPERATION

26.1 DESCRIPTION OF 3-TRY DIRECT SPARK IGNITION

The FENWAL 35-6X Series (previously FENWAL/TRITON 2461D) is a 24 VAC Microprocessor Based Direct Spark Ignition Control designed for use in all types of heating applications such as gas furnaces, boilers, water heaters and other similar appliances. The control utilizes a microprocessor to continually and safely monitor, analyze and control the proper operation of the gas burner. Value added features such as combustion blower control, LED diagnostics, automatic one hour reset, and flame current test pins highlight the controls' benefits.

26.2 OPERATIONS

A. **POWER UP/STANDBY**

- Upon applying power (24 volts) to 24 VAC/R, the control will reset, perform a self-check routine, initiate fulltime flame sensing, flash the diagnostic LED for up to one second, and enter the thermostat scan state.

B. **HEAT MODE**

- When a call for heat is received from the wall controller or thermostat supplying 24 volts to TH/W, the control will check the pressure switch for normally open contacts. The combustion blower is then energized and once the pressure switch contacts close, a pre-purge delay begins. Following the pre-purge period, the gas valve is energized, and sparks commence for the trial for ignition period.

- When a flame is detected during the trial for ignition, sparks are shut off immediately and the gas valve and combustion blower remain energized. The wall controller/thermostat, air pressure switch, and main burner flame are constantly monitored to ensure the system continues to operate properly. When the wall controller is turned OFF or thermostat is satisfied and the demand for heat ends, the main valve is de-energized immediately, the control senses the loss of flame signal and de-energizes the combustion blower.

C. **FLAME FAILURE - RE-IGNITION**

- If the established flame signal is lost while the burner is operating, the control will respond within 0.8 seconds. The HV spark will be energized for a trial for ignition period in an attempt to re-light the burner. If the burner does not light, the control will make two more attempts to re-light the burner. If the burner does not re-light, the control will go into lockout and flash the LED 3-times. If the flame is re-established, normal operation resumes.

27.0 TROUBLESHOOTING

⚠ WARNING:

Only qualified, licensed, service people trained to service gas fired heating equipment are to perform repairs on this unit. All replacement parts **MUST** originate from the manufacturer of this heater in order not to void CGA/AGA certification and product warranty.

Safety devices are not allowed to be rendered inoperative and left unattended. Failure to do any of the above can cause property damage, injury, or death.

A. **NO POWER TO HEATER**

1) INITIAL ELECTRICAL CHECKS

a) Ensure the wall control/thermostat is calling for heat.

b) Ensure all site electrical connections and wiring are secure.

a. Check site wiring for continuity.

c) Check electrical supply for blown fuse or breaker.

d) Test for power to burner head.

2) INITIAL GAS CHECKS

a) Ensure the gas supply manual valve is turned on.

b) Ensure the gas valve switch is turned on.

c) Check for gas supply and proper pressure to valve.

d) Check the wires and ensure that they and their connections are in good condition.

e) Check for power to valve.

B. **ELECTRICITY AND GAS TO HEATER, BUT STILL INOPERATIVE**

If after confirming that adequate gas and electricity are present and unit still does not operate, review the symptoms below. After the symptom has been identified, refer to the corresponding cause/cure, Review **CHECK CONTROL BOARD** section, and finalize troubleshooting procedure.

When checking the wiring to components, refer to wiring diagrams on pages 46 to 47. Also refer to legend below; this legend is located on the control module.

TERMINAL DESIGNATIONS

S1	**NOT USED**
GND	**SYSTEM GROUND (GREEN)**
V2	**VALVE GROUND (BROWN)**
R	**NOT USED**
L1	**120/240 VAC INPUT (HOT) (BLACK)**
IND	**INDUCER FAX OUTPUT (BLACK)**
V1	**VALVE POWER (WHITE)**
PSW	**AIR PRESSURE SWITCH INPUT (RED)**
W	**THERMOSTAT INPUT (RED)**

CAUTION: *Label all wires prior to disconnecting when servicing the heater. Wiring errors can cause improper and dangerous operation. A functional checkout of replacement control is recommended. Verify proper operation after servicing.*

Symptom	Cause/Cure
1. Wall Control/Thermostat on - Burner Head Dead	**A) Bad wall control/thermostat (check W terminal voltage)** **B) Air switch is stuck closed (try adjustment)** **C) Transformer bad** **D) Bad ignition module (check LED for steady on)**
2. Wall Control/Thermostat on - No Blower Output	**A) Wiring (check blower motor connection plug)** **B) Verify DSI voltage (Check L1 to GND and IND to GND terminal voltage)** **a. If 120V at IND but no power, call the factory.** **C) Bad ignition module (check LED for steady on)**
3. Unit energizes, but no TFI after purge delay	**A) Air switch is stuck open (try adjustment)** **a. Wiring (check PSW to GND terminal voltage)** **B) Check ignition module for flash code, proceed to section CHECK CONTROL BOARD**
4. Valve on, no spark	**A) Shorted electrode** **B) Open HV cable** **C) Bad ignition module**
5. Spark on, no valve	**A) Valve coil open** **B) Open valve wire** **C) Bad ignition module (check voltage between V1 and V2)**
6. Flame okay during TFI, no flame sense (after TFI)	**A) Bad electrode. Check for condition or cracks. Check location (see PROPER ELECTRODE LOCATION).** **B) Bad HV wire** **C) Poor ground at burner** **D) Check flame current (see FLAME SENSOR CURRENT CHECK)**

NOTE: TFI = Trial for Ignition HV = High Voltage

FLAME SENSOR CURRENT CHECK

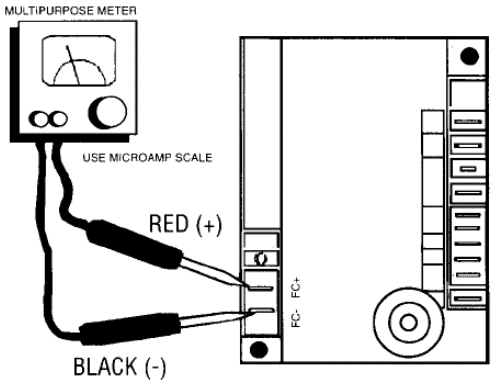

Figure 39. FLAME SENSOR CURRENT CHECK

Flame current is the current which passes through the flame from the sensor to the ground. The minimum flame current necessary to keep the system from locking out is 0.7 micro amps. To measure flame current, connect an analog DC micro ammeter to the FC- FC terminals per figure. Meter should read 0.7 µA or higher. If the meter reads below "0" on scale, the meter leads are reversed. Disconnect power and reconnect the meter leads for proper polarity.

PROPER ELECTRODE LOCATION

Proper location of the electrode assembly is important for optimum system performance. The electrode assembly should be located so that the tips are inside the flame envelope about ¾" (1.9 cm) to 1" (2.54 cm).

CAUTIONS:

1) Ceramic insulators should not be in or close to the flame.
2) Electrode assemblies should not be disassembled; Electrodes should have a gap spacing of .125" (3.175 mm). If this spacing is not correct, the assembly must be replaced.
3) Electrodes that have excessive corrosion or degradation must be replaced.
4) Exceeding the temperature limits can cause nuisance lockouts and premature electrode failure.

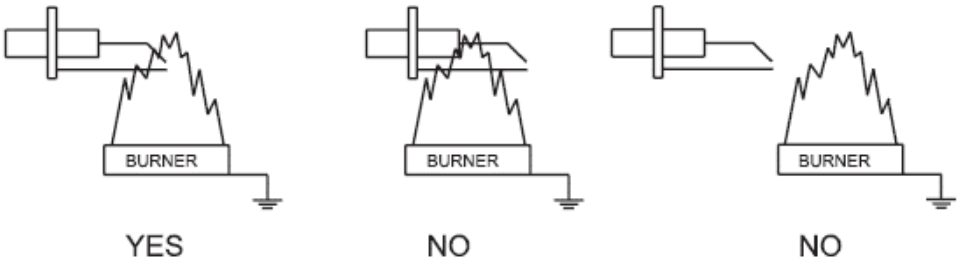

Figure 40. PROPER ELECTRODE LOCATION

C. **CHECK CONTROL BOARD**

Open the access door and view the diagnostic red LED, located on the direct spark ignition (DSI) module. If the DSI module is in a lockout state, the LED will flash on for ¼ second, then off for ¼ second during a fault condition. The pause between fault codes is 3 seconds.

FAULT CONDITIONS

Error Mode	LED Indication
1. Internal Control Fault / Failure	Steady On
2. Air Flow Fault	1 flash
3. Flame with No Call for Heat	2 flashes
4. Ignition Lock Out	3 flashes

1. **INTERNAL CONTROL FAULT**
   - If power supply cycles fluctuate beyond 50/60 cycles such as with an un-stabilized power supply from a generator, unit will not operate. If the ignition module is faulty the unit will not operate.

2. **AIRFLOW FAULT - LOCK OUT (COMBUSTION AIR FLOW PROBLEMS)**
   - **NOTE** the air/pressure switch is field adjustable and can be checked or adjusted if required.
     - To adjust the air switch, remove the silicone covering the set screw (used to prevent screw movement during normal heater operation) and use an allen key. Use maximum 3 full turns (1/4 turn at a time) in or out, do not over adjust.
   - Combustion airflow is continually monitored during an ignition sequence by the air switch (PSW). If during the initial call for heat the pressure switch contacts are in the closed position for 30-seconds without an output to the Combustion Blower, an airflow fault will be declared, and the module will remain in this mode with the combustion blower off.
   - If the airflow switch remains open for more than 30-seconds after the combustion blower output (L1 and IND) is energized, an airflow fault will be declared, and the module will stay in this mode with the combustion blower off.
   - If the airflow signal is lost while the burner is firing, the control will immediately de-energize the gas valve and the combustion blower will remain on. If the call for heat remains, the control will wait for proper airflow to return. If proper airflow air is not detected after 30-seconds an airflow fault signal will be declared.

   Proceed as follows to verify reason for airflow lockout:

   1. Check the louvered intake and exhaust diverter (or connected venting) for blockage and remove.
   2. Check the combustion air blower for dirt. Clean and/or replace as necessary.
   3. Check the vinyl hoses connected to the air switch for blockage. Clean and/or replace as necessary.
   4. If the unit still does not ignite and if applicable, disconnect the external exhaust vent at heater and retry for ignition. If the unit ignites, check to verify that the vent is of proper size and length and that there is no blockage, see VENTING PH-A/STANDARD OUTPUT MODELS on pages 33 to 38. Replace the venting as necessary to decrease the air restriction.
   5. If after 1, 2, 3 and 4 are performed and the unit still does not operate, verify air switch replacement.
      a) Contact the factory for instructions on testing the air switch.
   6. Replace any necessary components, reconnect venting if applicable, verify operation of unit.

3. **FLAME WITH NO CALL FOR HEAT (FLAME FAULT)**
   - If at any time the main valve fails to close completely and maintains a flame, the full-time flame sense circuit will detect it and energize the combustion blower. Should the main valve later close off completely removing the flame signal, the combustion blower will power off.

4. **IGNITION LOCK OUT (FAILURE TO LIGHT)**
   - FENWAL DSI Module will attempt three ignition trials before going into lockout. The valve relay will be de-energized immediately, and the combustion blower will be turned off.
   - Recovery from lockout requires a manual reset by either resetting the wall control/thermostat or removing 24 volts or removing the electrical power supply for a period of 5-seconds.
   - If the wall control/thermostat is still calling for heat after one hour, the module will automatically reset and attempt to ignite the burner again.

If the unit still does not operate, contact the factory for additional troubleshooting.

If the unit will not change the output, especially where a transformer has been replaced due to a short circuit, contact the factory for assistance.

28.0 PARTS

28.1 BURNER HEAD AND RELATED PARTS

(Refer to pages 62 and 63 for part number and description)

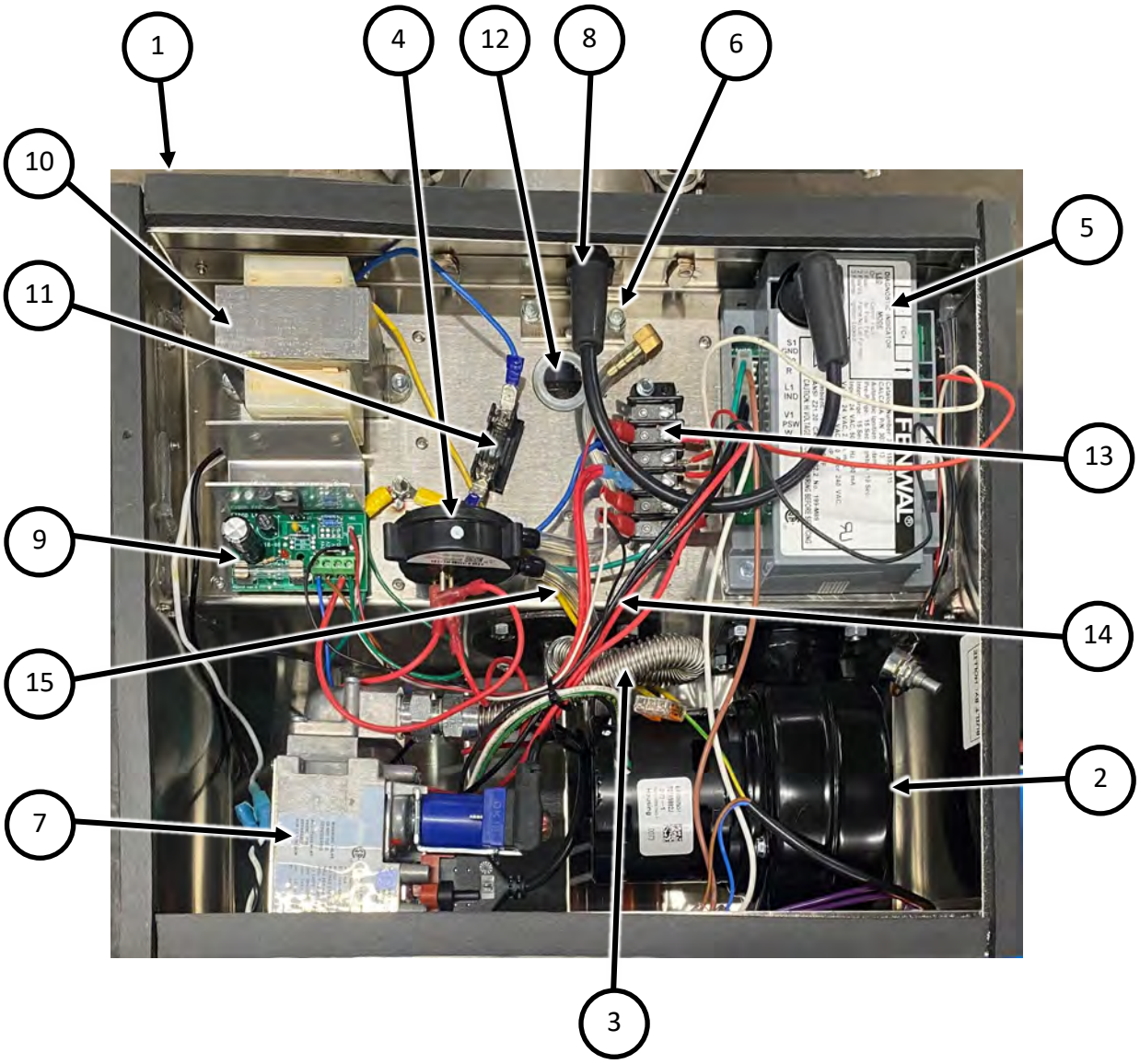

Figure 41. BURNER HEAD PARTS

28.2 REFLECTOR AND TUBE PARTS

(Refer to page 63 for part number and description)

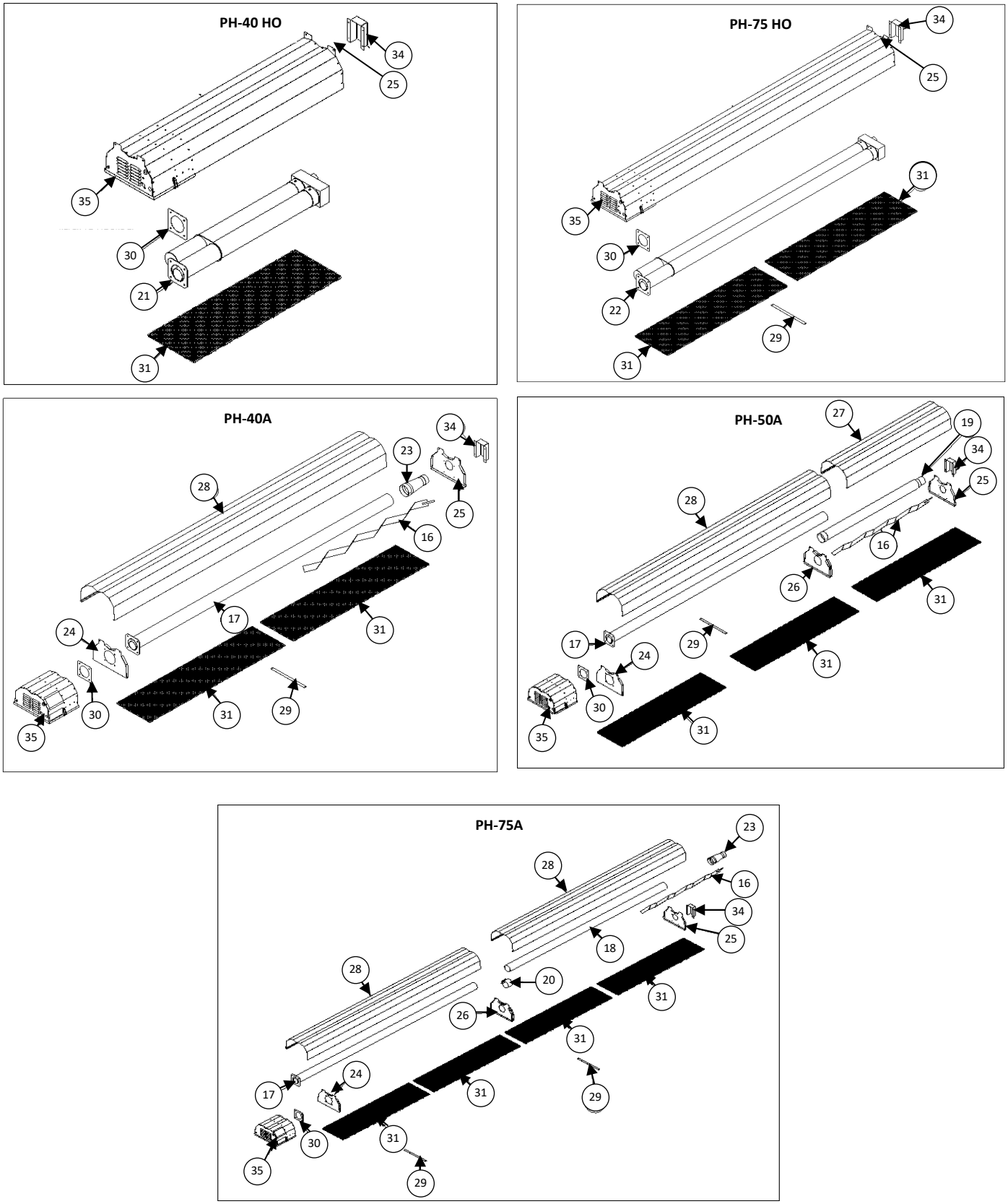

Figure 42. REFLECTOR AND TUBE PARTS

28.3 PARTS LIST

A. REPLACEMENT BURNER HEADS AND HEATERS

(See page 60 for visual details)

REPLACEMENT BURNER HEADS (ONLY AVAILABLE FOR PH-A SERIES/STANDARD OUTPUT MODELS):					
ITEM	**PIN**	**MODEL**	**INPUT**	**FUEL**	**WEIGHT**
1	5120006	PH-40A	20,000 up to 40,000	Natural Gas	32 lbs. (16.4 kg)
1	5120006L	PH-40A	20,000 up to 40,000	Propane	32 lbs. (16.4 kg)
1	5120009	PH-50A	25,000 up to 50,000	Natural Gas	32 lbs. (16.4 kg)
1	5120009L	PH-50A	25,000 up to 50,000	Propane	32 lbs. (16.4 kg)
1	5120010	PH-75A	37,500 up to 75,000	Natural Gas	32 lbs. (16.4 kg)
1	5120012	PH-75A	37,500 up to 75,000	Propane	32 lbs. (16.4 kg)
REPLACEMENT HEATERS:					
1	5260200	PH-40A	20,000 up to 40,000	Natural Gas	70 lbs. (31.8 kg)
1	5260201	PH-40A	20,000 up to 40,000	Propane	70 lbs. (31.8 kg)
1	5260206	PH-50A	25,000 up to 50,000	Natural Gas	95 lbs. (43.1 kg)
1	5260205	PH-50A	25,000 up to 50,000	Propane	95 lbs. (43.1 kg)
1	5260209	PH-75A	37,500 up to 75,000	Natural Gas	110 lbs. (49.9 kg)
1	5260210	PH-75A	37,500 up to 75,000	Propane	110 lbs. (49.9 kg)
1	5122000	PH-40 HO	20,000 up to 40,000	Natural Gas	70 lbs. (31.8 kg)
1	5122001	PH-40 HO	20,000 up to 40,000	Propane	70 lbs. (31.8 kg)
1	5122004	PH-75 HO	37,500 up to 75,000	Natural Gas	120 lbs. (54.4 kg)
1	5122005	PH-75 HO	37,500 up to 75,000	Propane	120 lbs. (54.4 kg)
1	3162000	PH-40 HO Marine	20,000 up to 40,000	Natural Gas	70 lbs. (31.8 kg)
1	3162002	PH-40 HO Marine	20,000 up to 40,000	Propane	70 lbs. (31.8 kg)
1	3160004	PH-75 HO Marine	37,500 up to 75,000	Natural Gas	120 lbs. (54.4 kg)
1	3162006	PH-75 HO Marine	37,500 up to 75,000	Propane	120 lbs. (54.4 kg)
Contact the factory to verify the parts required as current components and can differ from older models. Part numbers are subject to change.					

B. BURNER HEAD COMPONENTS

BURNER HEAD COMPONENTS:				
ITEM	**PIN**	**MODELS**	**DESCRIPTION**	**WEIGHT**
2	3010001	All	Blower Motor Assembly	**
3	3020017	All	12” Metal Gas Flex	**
4	3070401	PH-40A/PH-40 HO	Air Switch 40,000 BTU	**
4	3070402	PH-50A	Air Switch 50,000 BTU	**
4	3070403	PH-75A/PH-75 HO	Air Switch 75,000 BTU	**
5	3030613	All	Fenwal Direct Spark Ignition Module	**
6	3030377	All	Electrode Assembly	**
7	3020018/19/20	All	Sigma SIT 845 Gas Valve Assembly	**
8	3030026	All	High Voltage Ignition Wire	**
9	P000196	All	DC Power Supply Circuit Board (3 Lead)	**
10	3070017	All	Transformer 50VA Variable Input	**
11	3070019	All	Fuse Block ¼” x 1-¼”	**
11	3070022	All	Fuse - 2A 250V - ¼” x 1-¼”	**
12	3110022	All	View Port - Mica Window Assembly	**

BURNER HEAD COMPONENTS (CONTINUED):				
ITEM	**PIN**	**MODELS**	**DESCRIPTION**	**WEIGHT**
13	P000561	All	Terminal Block 6 Pl.	**
14	3070322	All	Wire Harness	**
15	3010012	All	Vinyl Hose for Air Switch	**
-	5090156	All	Burner Cap Assembly	**
-	5120035	All	PH Stainless Steel Latches	**
-	4080030	All	Gaska Tape ½” (Top, Middle, Bottom)	**
-	4080037	All	Gaska Tape ¾” (Latch Sides)	**
-	715005F	304 SS Models	PH Burner Head Lid 304 SS	5
-	91505F	316 SS Models	PH Burner Head Lid 316 SS	5
-	1090C1-28V	All	ON Indicator Light	**

** UNDER 5 LBS

C. **TUBE COMPONENTS**

(See page 61 for visual details)

TUBE COMPONENTS:				
ITEM	**PIN**	**MODEL**	**DESCRIPTION**	**WEIGHT**
16	5170743	PH-A SERIES	7’ Baffle/Turbulator	5 lbs. (2.3 kg)
17	P000688	PH-40A	Flanged Tube ALHT w/comb 113" (287 cm)	30 lbs. (13.7 kg)
17	3170326	PH-50A/PH-75A	Flanged Tube ALHT w/comb 124" (315 cm)	30 lbs. (13.7 kg)
18	P000689	PH-75A	Tube ALHT 4" (10.2 cm) x 108 ¾” (276.2 cm)	30 lbs. (13.7 kg)
19	37759F	PH-50A	Stinger Tube ALHT 4" (10.2 cm) x 5' (1.53 m)	15 lbs. (6.8 kg)
20	3170201	PH-A SERIES	Tube Clamp	**
21	PHOT5	PH-40 HO	PH-40 HO High Output Tube Assembly	45 lbs. (21 kg)
22	PHOT10	PH-75 HO	PH-75 HO High Output Tube Assembly	65 lbs. (30 kg)
23	3200744	PH-40A/PH-75A	4” x 3” Reducer	5 lbs. (2.3 kg)
30	5080319	All	Flange Gasket	**

** UNDER 5 LBS

D. **REFLECTOR COMPONENTS**

(See page 61 for visual details)

REFLECTOR COMPONENTS:				
ITEM	**PIN**	**MODEL**	**DESCRIPTION**	**WEIGHT**
24	5120034F	PH-A SERIES	PH End Cap 304 SS (Flange End)	5 lbs. (2.3 kg)
25	5120033F	PH-A SERIES	PH End Cap 304 SS (Exhaust End)	5 lbs. (2.3 kg)
25	715008F	PH-HO SERIES	PH End Cap 304 SS (Exhaust End)	5 lbs. (2.3 kg)
26	3190621	PH-50A/PH-75A	PH Joint/Hanger Assembly 304 SS	5 lbs. (2.3 kg)
27	5180166	PH-50A	Reflector - Single Tube 5' (1.53 m)	10 lbs. (4.54 kg)
28	5180165	PH-A SERIES	Reflector - Single Tube 10' (3 m)	20 lbs. (9.1 kg)
29	5180202	PH-A SERIES/PH-75 HO	SS Reflector Support Strap	**
31	5190133	PH-A SERIES	Egg Crate Grille, c/w 6 Clips	5 lbs. (2.3 kg)
31	5190132	PH-HO SERIES	Egg Crate Grille, c/w 6 Clips	5 lbs. (2.3 kg)
34	51246F	All	304 SS Exhaust Diverter	**
35	5120030F	PH-A Series	PH Louvered Air Intake 304 SS	5 lbs. (2.3 kg)
35	715002F	PH-HO Series	PH Louvered Air Intake 304 SS	5 lbs. (2.3 kg)

** UNDER 5 LBS

29.0 WARRANTY

Non-Transferable / Limited Warranty - Calcana Heaters

Calcana Industries Ltd. ('the Manufacturer") warrants to the original owner at the original installation site that the heater manufactured by the manufacturer ('the Product") will be free from defects in material and workmanship for one (1) year from date of shipment from the factory. Calcana further warrants that the heat exchanger, reflectors, brackets, burner and burner box will be free from defects in material and workmanship for three (3) years from the date of shipment from the factory. If upon examination by the Manufacturer the Product is shown to have a defect in the material or workmanship during the warranty period, the Manufacturer will repair or replace, at its option, that part of the Product which is shown to be defective. In no event shall the customer be entitled to consequential, indirect or special damages of any nature for defective merchandise, and in no instance may damages include loss of profit. Calcana reserves the right to inspect the system involved in any claim against the warranty. The warranty is null and void if any of the components installed are not original Calcana parts or the installation does not conform to the supplied installation manual.

This limited warranty does not apply:

a) If the Product has been subjected to misuse or neglect, has been accidentally or intentionally damaged, has not been installed, maintained or operated in accordance with the furnished written instructions, or has been altered or modified in any way by an unauthorized person.
b) To any expenses, including labor or material, incurred during removal or reinstallation of the Product.
c) To any damage due to corrosion by chemicals, including halogenated hydrocarbons precipitated in the air.
d) To any workmanship of the Installer of the Product
e) If Product is not paid for in a timely manner and in accordance with payment terms
f) If Product or any part of it is damaged by any act of nature including, but not limited to; hurricanes, gales, tornadoes, wind snow, sleet, hail, rain, flood, fire or any other similar or dissimilar condition, or by normal wear and tear, which included marks and/or dents to the reflector caused by improper transportation or installation.
g) If Product or any part of it is damaged by vandalism, improper use, accumulation of weight or heavy loads on the heater.
h) If Product is damaged due to lack of cleaning or maintenance, whether routine or otherwise.

The limited warranty is conditional upon:

a) Advising the installing contractor, who will in turn notify the distributor or Manufacturer.
b) Shipment to the Manufacturer of that part of the Product thought to be defective. Goods can only be returned with prior written approval of the Manufacturer. All returns must be freight prepaid.
c) Determination in the reasonable opinion of the Manufacturer that there exists a defect in material or workmanship.

Repair or replacement of any part under the Limited Warranty shall not extend the duration of the warranty with respect to such repaired or replaced part beyond the stated warranty period.

All labor during the warranty period is the responsibility of the installing person or contractor.

This Limited Warranty is in lieu of all other warranties, either express or implied, and all such other warranties, including without limitation implied warranties of merchantability and fitness for a particular purpose, are hereby disclaimed and excluded from this limited warranty. The warranty cannot be transferred or assigned by the Customer. All disputes arising from this warranty are to be governed by the laws of the Province of Alberta and any action to enforce this warranty must be initiated in the Province of Alberta. In no event shall the Manufacturer be liable, in any way for any consequential, special, or incidental damages of any nature whatsoever, or for any amount in excess of the selling price of the Product or any parts thereof found to be defective. This Limited Warranty gives the original owner of the Product specific legal rights. You may also have other rights which may vary by each jurisdiction.

Calcana Industries Ltd.

6060 86 Ave SE
Calgary, AB T2C 4L7

Local: 403-777-0808
Toll Free: 800-778-6729