Scotsman®

Service Manual for Self Contained Prodigy Cuber

Model CU3030X

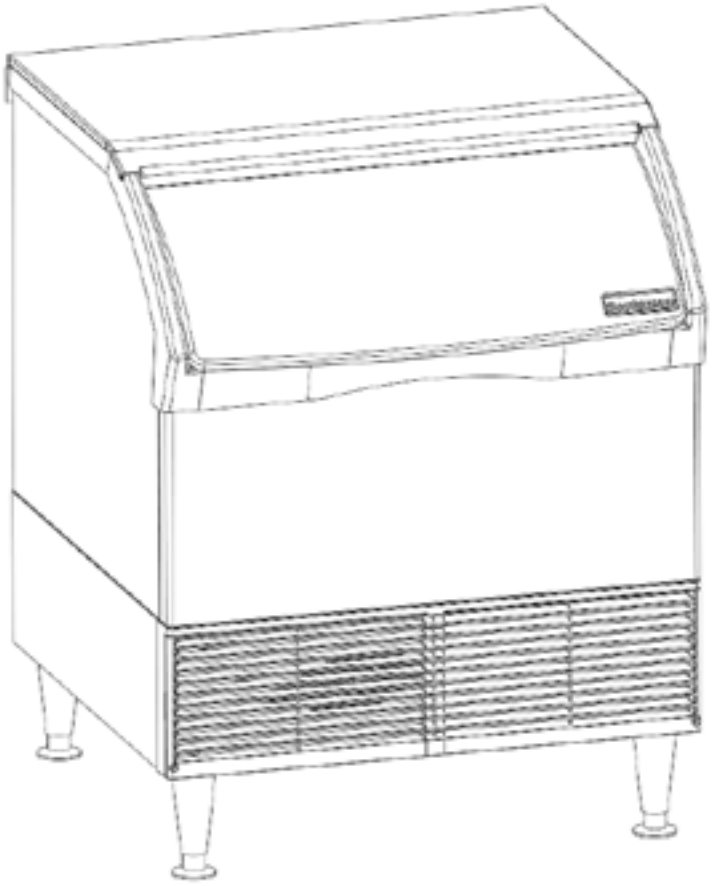

Important Safety Information. Make sure to read through fully to avoid severe injury or death.

WARNING

R290 Refrigerant is Flammable.
Flame can cause burns or property damage
Keep away from sources of fire

This ice machine contains **FLAMMABLE** refrigerant and risk of fire or explosion. Do not use cigarettes, vapes, cellphone, near pipes or cables as it can be a source of ignition or spark.

Ice machine must not be installed next to equipment with open ignition source (ie. open flames, an operating gas appliance, or electric heater).

Do not store explosive substances such as aerosol cans with a flammable propellant in this appliance.

WARNING: In order to reduce flammability hazards the installation of this appliance must only be carried out by a suitably qualified person.

Take precautions and do not install next to, anything that continuously vibrates, avoiding excessive vibrations or pulsations.

Make sure to install in a well ventilated environment and ensure ventilation and outlets are not obstructed.

Properly secure electrical wiring and cabling so as not subject to wearing or vibrations.

Keep fire extinguisher on hand nearby in case of emergencies.

WARNING: Cancer and Reproductive Harm. Visit www.P65Warnings.ca.gov for details.

Use a Scotsman recommended technician certified to repair R290 equipment.

Use ONLY Scotsman factory service parts. Use of non OEM parts can be dangerous because of the design changes needed to safely use R290.

Introduction

The design of this cuber is the result of years of experience and testing. Standard features include a removable bin for service and an on-off switch at the front of the cabinet for easy operational control.

Contents

Introduction....1
Installation: Product Specifications....2
Model Number Description....3
Water....4
Cabinet Layout....5
Bin Removal....6
Plumbing Requirements....7
Electrical....8
Adjustments....9
Control Switches....10
Cuber System Information....11
Controller Information....12
Component Indicator Light Table....13
How It Works - Air Cooled....14
How It Works - Water Cooled....15
Electrical Sequence - Air or Water Cooled....16
Electrical Component Details....18
Electrical Component Details (continued)....19
Refrigeration & Water Systems....20
Refrigeration & Water Systems....21
Control Safeties....22
Restarts....23
Control Button Use....24
Test Mode:....25
Service Diagnosis....26
Service Diagnosis....27
Service Diagnosis....28
Service Diagnosis - Low ice making capacity....29
Cleaning, Sanitation and Maintenance....30
Cleaning, Sanitation and Maintenance....32
Sensor Testing....33
Thermistors....34
Test Procedures - Loads....35
Test Procedures....36
Test Procedures....37
Test Procedures....38
Technical Information....39
Performance Data....40
Wiring Diagram, 60 Hz up to Serial Number TBD....41
Removal and Replacement....42
Removal and Replacement....43
Removal and Replacement....44
Refrigeration Removal and Replacement....45
Refrigeration Removal and Replacement....46
Decommissioning....47

Note any Caution or Warning symbols when they appear on the product or in this manual. They indicate potential hazards.

Location Limitations:

The product is designed to be installed indoors, in a controlled environment. Air cooled models discharge very warm air into the room. Water cooled models discharge warm water into the building's drain. Space needs to be provided for service access.

Space Limitations

Do not block air flow at the front.

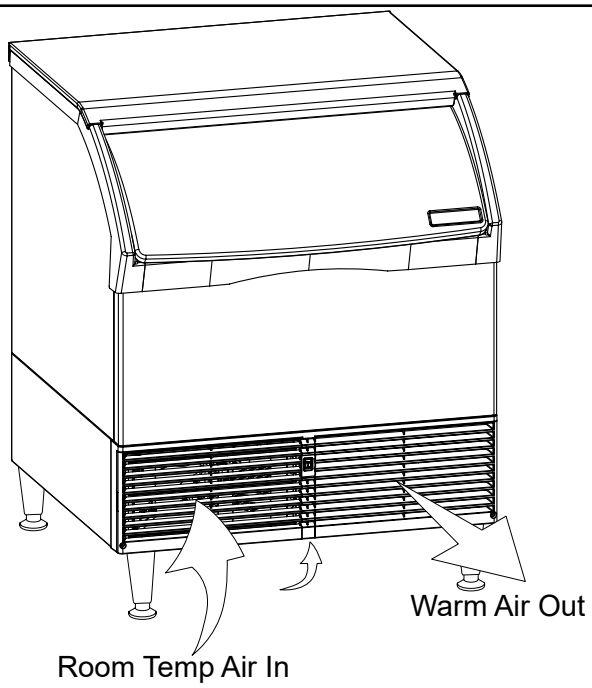

Air Flow - Do Not Restrict

Airflow for air cooled models is in the front left and out the front right; CU3030X air cooled models also take air in from the bottom of the cabinet

Built In Situations:

- If built in under the counter with no space above, the bin cannot be removed without moving the unit.
- If built in with 1" or more clearance above the unit, the bin can be removed without moving the unit.
- If built in with between 1/2 and 1 inch of clearance, releasing the top panel's back flap prior to placement will allow removal of the bin without moving the unit.

In most cases, CU3030X air cooled models installed without legs or casters will experience reduced ice making capacity.

Environmental Conditions

	Minimum	Maximum
Air Temperature	50ºF	100ºF
Water Temperature	40ºF	100ºF
Water Pressure	20 psi	80 psi

Note: Ice making capacity will be severely reduced for air cooled machines in hot environments, such as those over 95 degrees.

Power Supply- acceptable voltage ranges

	Minimum	Maximum
115 volt model	104	126
230 volt model	198	253

Warranty Information

The warranty statement for this product is provided separately from this manual. Refer to it for applicable coverage. In general warranty covers defects in material or workmanship. It does not cover maintenance, corrections to installations, or situations when the machine is operated in circumstances that exceed the limitations printed above.

This is a commercial model, if installed in a residence some commercial service companies may not be able to service it on site.

Product Information

The product is a self contained cuber with bin. That type of machine is designed to be free standing or it can be built in under the counter.

Options

A taller 6" stainless steel leg kit is available. The kit number is KLP8S.

When not using legs or casters, most codes require sealing to the floor. Kit number to allow sealing is the KPUFM30.

Model Number Description

Example:

- CU3030SAX-1E
- C= cuber
- U=under the counter type
- 30= nominal ice capacity in 10s of pounds
- 30= nominal width of cabinet
- S= Cube size. S=small or half dice cube. M=medium or full dice cube
- A=Condenser type. A=air cooled. W=water cooled
- X=R290 refrigeration
- -1=115 60 Hz, -32 = 230 volt, 60 Hz
- E=Series revision code. E=latest series

Note: In some areas of this manual model numbers may include only the first six characters of the model number, meaning that the cube size, condenser type and voltage differences are not critical to the information listed there.

Scotsman ice systems are designed and manufactured with the highest regard for safety and performance.

Scotsman assumes no liability of responsibility of any kind for products manufactured by Scotsman that have been altered in any way, including the use of any part and/or other components not specifically approved by Scotsman.

Scotsman reserves the right to make design changes and/or improvements at any time. Specifications and design are subject to change without notice.

Dimensions w” x d” x h”** (without legs)	Model	Electrical volts/Hz/phase	Condenser	Total Load Amps	Maximum Fuse Size*
30.62 x 30 x 33	CU3030SAX-1A	115/60/1	Air	8.6	15
	CU3030SWX-1A	115/60/1	Water	7.7	15
	CU3030SAX-32A	208-230/60/1	Air	4.5	15

Table notes: Height is without legs. Medium cube models have the same electrical characteristics as Small. Series revision code omitted. * Or HACR type circuit breakers.
** If not using legs, add .25” for screws below base. Legs add 6 to 6.75 inches, but not the 1/4 inch for the screws. Use of floor mounting kit adds about a half inch.

The quality of the water supplied to the ice machine will have an impact on the time between cleanings and ultimately on the life of the product. Water can contain impurities either in suspension or in solution. Suspended solids can be filtered out. In solution or dissolved solids cannot be filtered, they must be diluted or treated. Water filters are recommended to remove suspended solids. Some filters have treatment in them for suspended solids.
Check with a water treatment service for a recommendation.

RO water. This machine can be supplied with Reverse Osmosis water, but the water conductivity must be no less than 10 microSiemens/cm.

Potential for Airborne Contamination

Installing an ice machine near a source of yeast or similar material can result in the need for more frequent sanitation cleanings due to the tendency of these materials to contaminate the machine. Most water filters remove chlorine from the water supply to the machine which contributes to this situation. Testing has shown that using a filter that does not remove chlorine, such as the Scotsman Aqua Patrol, will greatly improve this situation, while the ice making process itself will remove the chlorine from the ice, resulting in no taste or odor impact. Additionally, devices intended to enhance ice machine sanitation, such as the Scotsman Aqua Bullet, can be placed in the reservoir to keep it cleaner between manual cleanings.

This manual covers several models. The model number on the product is located in two places, on the back dataplate and on the model and serial number tag, located behind the front panel. See the illustration for the dataplate and serial tag locations.

Water purge

Cube ice machines use more water than what ends up in the bin as ice. While most water is used during ice making, a portion is designed to be drained out every cycle to reduce the amount of hard water scale in the machine. That’s known as water purge, and an effective purge can increase the time between needed water system cleaning.

In addition, this product has the capability to automatically vary the amount of water purged based on the purity of the water supplied to it. The water purge rate can also be set manually. Adjustments of purge due to local water conditions are not covered by warranty.

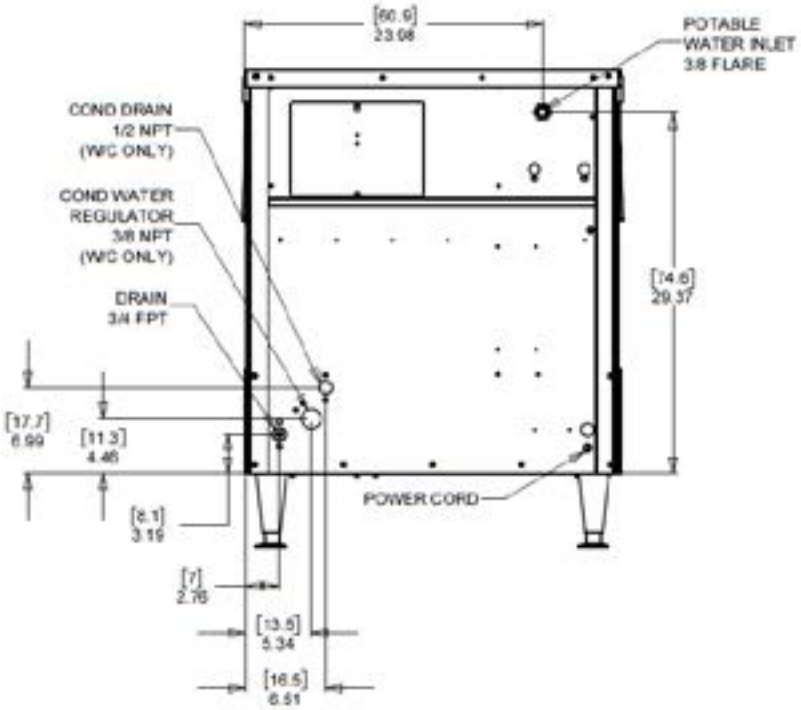
[60.9]
23.98
POTABLE
WATER INLET
3/8 FLARE
COND DRAIN
1/2 NPT
(WC ONLY)
COND WATER
REGULATOR
3/8 NPT
(WC ONLY)
DRAIN
3/4 FPT
[74.6]
29.37
[17.7]
6.99
[11.3]
4.46
POWER CORD
[8.1]
3.19
[7]
2.76
[13.5]
5.34
[16.5]
6.51

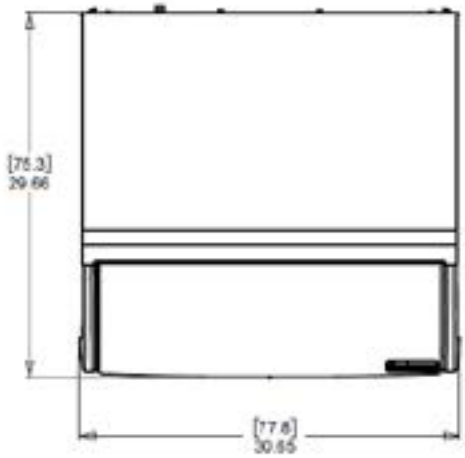
[75.3]
29.66
[77.8]
30.65

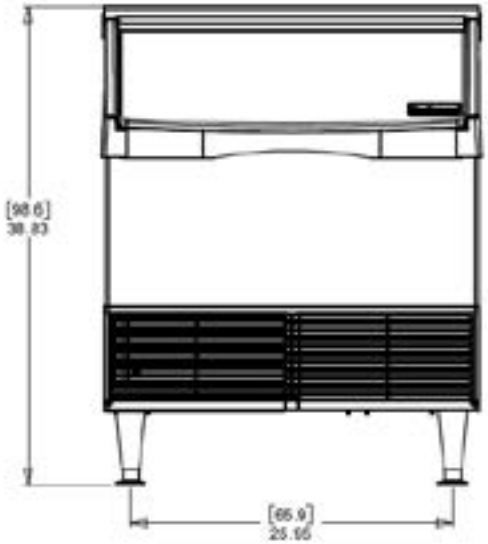
[98.6]
38.83
[65.9]
25.95

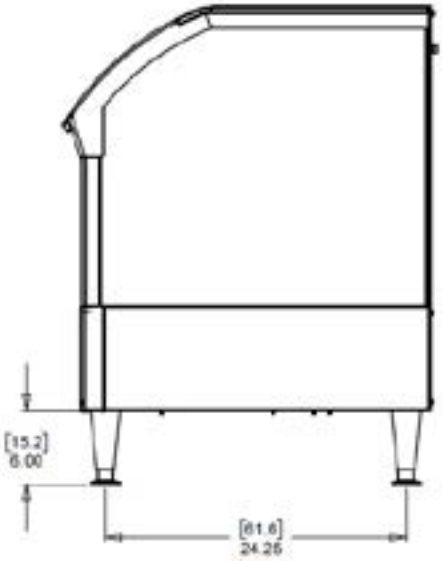
[15.2]
6.00
[61.6]
24.25

Bin Removal

The ice storage bin is removable to allow access to the refrigeration system for service.

1. Remove front louvers. Remove left then right.
2. If the machine is in an ice making mode, push and release the Manual Harvest button to release any ice that might be on the evaporator.
3. Push and hold the controller's Off button to shut the machine off.
4. Remove all ice from the bin.
5. Disconnect electrical power.
6. Remove door (open about 1.5" and pull bottom out).
7. Remove the top panel, there are two fasteners under the front corners of the top. Back them out and lift the top up, push back slightly and lift panel up and off the machine..

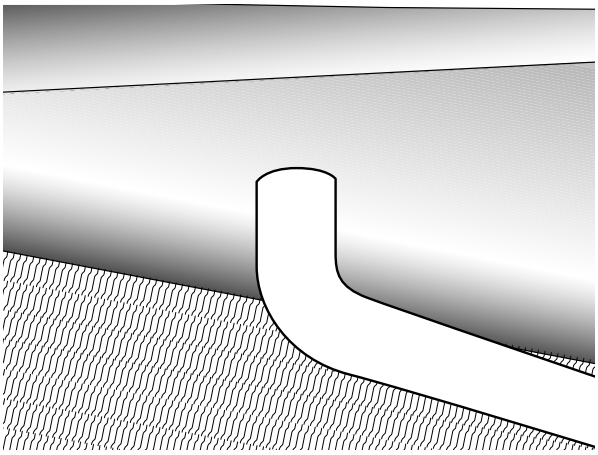

8. Disconnect the drain tube from the bin drain fitting.

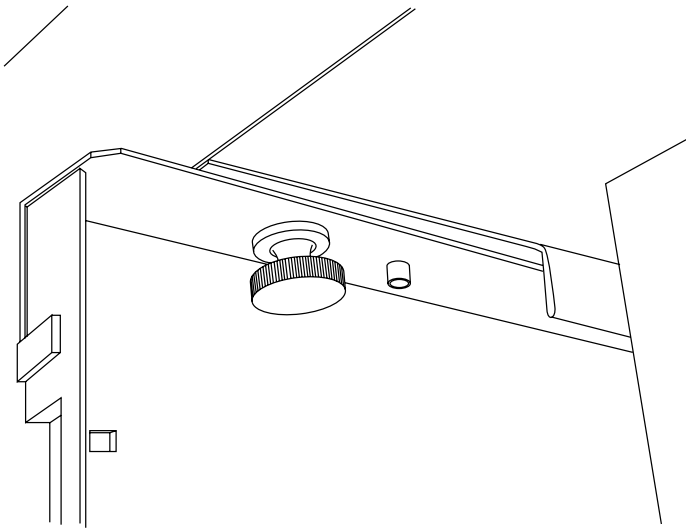

9. Remove two bolts from the bottom of the bin, one on the left and one on the right.
10. Remove bolt from the back wall of the bin.

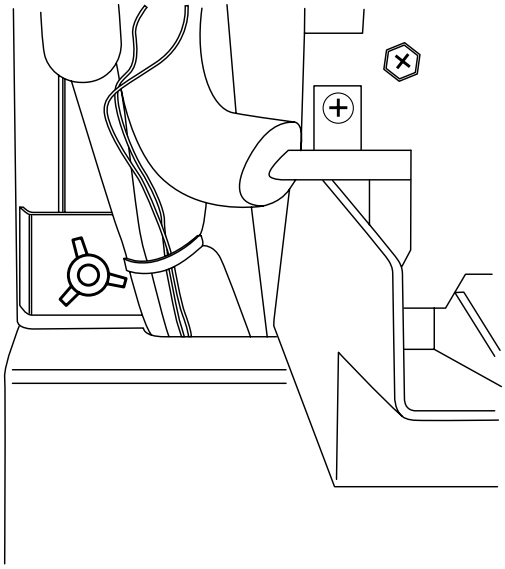

11. Pull the bin forward and off the chassis.

Connect to cold, potable water. A hand actuated valve within site of the machine is required. Air cooled models have a single 3/8” male flare inlet water connection. Water cooled models have an additional 3/8” FPT condenser inlet water connection, and a 1/2” FPT condenser drain.

Water Supply and Filters

If connecting to water filtration, filter only the water to the reservoir, not to the condenser. Install a new filter cartridge.
All models require drain tubing to be attached to them. Air cooled models have a single ¾” FPT drain fitting in the back of the cabinet. Water cooled models have the same fitting plus an additional ½” FPT drain fitting in the back of the cabinet.
Install new tubing when replacing a prior ice machine, as the tubing will have been sized for the old model and might not be correct for this one.

1. Connect water supply to water inlet fittings. 3/8” OD tubing is recommended.

Note: This NSF listed model has a 1” anti-back flow air gap between the float valve orifice and the highest possible reservoir water level; no back flow device is required for the potable water inlet.

2. Connect drain tubing to drain fittings.
3. Route the drain tubing to building drain. Follow local codes for air gap.

Drain Tubing

Use rigid drain tubes and route them separately – do **not** Tee into the bin’s drain and, if water cooled, do **not** Tee the condenser drain into the reservoir or bin drain.

Vent the reservoir drain. A vertical vent at the back of the drain, extended about 8 - 10” will allow the gravity drain to empty and also keep any surges during draining from discharging water out the vent.

Horizontal runs of drain tubing need a ¼” fall per foot of run for proper draining.

Follow all applicable codes.

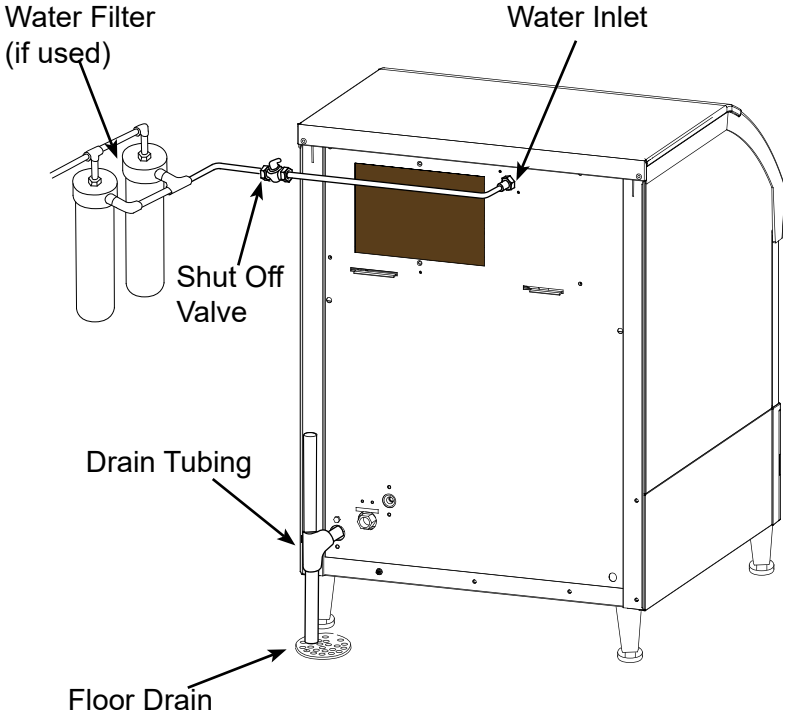

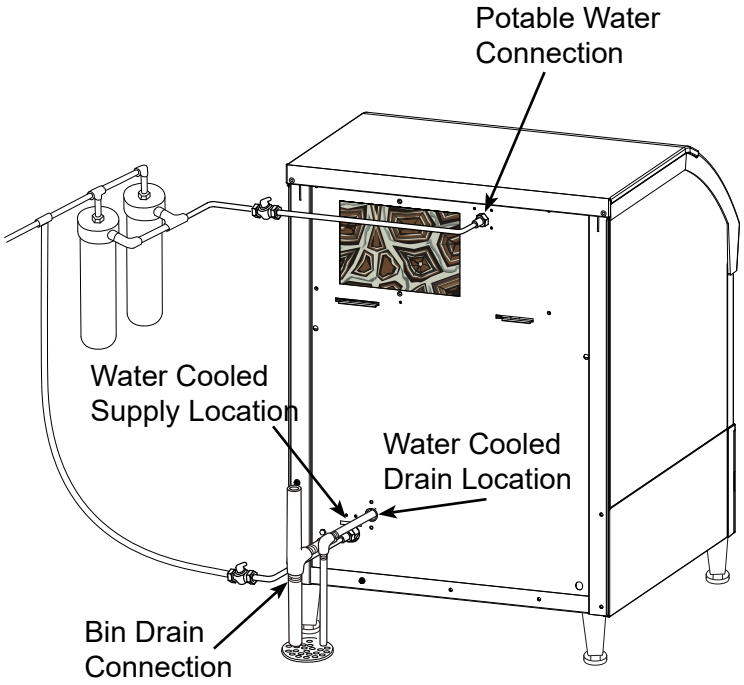

The machine is supplied with a power cord.
208-230 volt, 60 Hz cords have NEMA 6-20P plugs.

This is a cord-connected unit, and must be on a separate power supply. Check the dataplate for the voltage, ampacity and maximum fuse size and per the dataplate use fuses or HACR circuit breakers.

Follow All Local Codes - This Unit Must Be Grounded. Do not use extension cords and do not disable or by-pass ground prong on electrical plug.

Typical Ice Making Cycle Times (minutes).

Listed times are for clean machines in proper installations. Cycle length at startup will be longer until the system stabilizes.

Model	70ºF air / 50ºF. water	90ºF. air / 70ºF. water
CU3030AX	TBD	TBD
CU3030WX	TBD	TBD

Bridge Thickness - For the Service Tech Only

1. Remove left louver, locate controller on and off switches.
2. Push and hold Off till the machine stops.
3. Remove curtain.
4. Use a hex wrench and rotate the bridge thickness adjustment screw in 1/8 turn increments CW to increase bridge thickness. Rotate CCW to decrease bridge thickness.

Caution: Do not make the bridge too thin or the machine will not harvest properly. Bridge thickness adjustments are not covered by warranty.

5. Return curtain and louver to their normal positions.
6. Push and release the On button. Check next harvest of ice. Repeat steps 1-6 if needed.

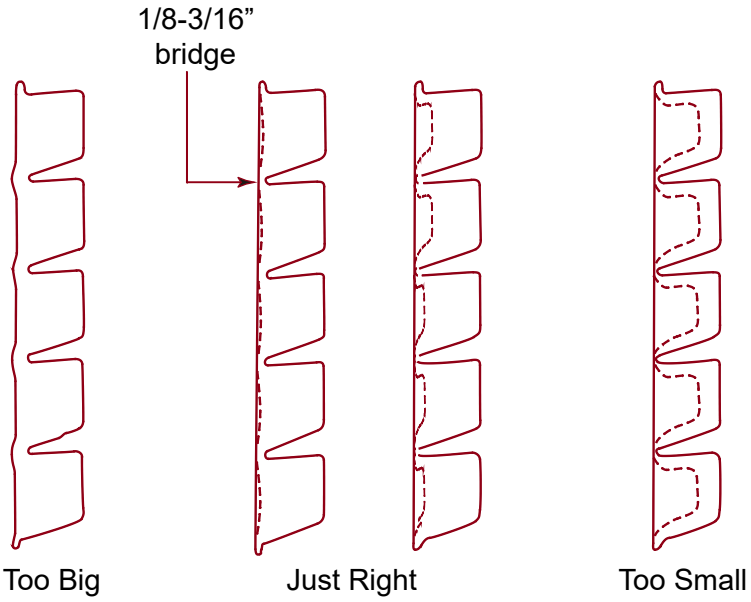

Water Purge Setting

The water purge is factory set to the automatic position, suitable for most water conditions. The setting can be changed to one of 5 manual settings or left on automatic.

Setting	Water Type
1	Minimum - RO water or equivalent
2	Moderate - Low TDS, non RO
3	Standard - for typical water
4	Heavy - High TDS
5	Maximum - Very high TDS
A	Automatic - Factory setting

Note: Water cooled models, the refrigeration system discharge pressure is factory set at 245 PSIG, which should yield a freeze cycle discharge water temperature of about 105-110 degrees F. Adjust if necessary.

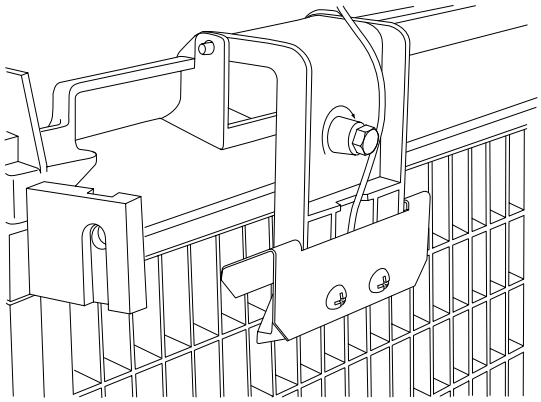

Ice Bridge Thickness Measurement

To set purge:

1. Switch the machine OFF by holding the Off button in until a number or the letter A shows on the display.
2. Press and release the On button repeatedly until the number on the display corresponds to the desired setting.
3. Press and release the Off switch again to return to the normal control state.

There is a front on and off switch, located in the top center of the louvers. Switching this switch Off will immediately stop the machine. Switching it back on will cause the machine to start in a timed harvest cycle.

The controller also has on and off switches, which can also switch the machine on and off, but their operation is different:

To switch the machine OFF, push and release the Off button. The machine will shut off at the end of the next cycle. To shut the machine off immediately, push and hold the Off button for 3 seconds.

To switch the machine ON, push and release the On button. The machine will go through a start up process and then resume ice making.

Note: Front On/Off Switch discontinued February 2012

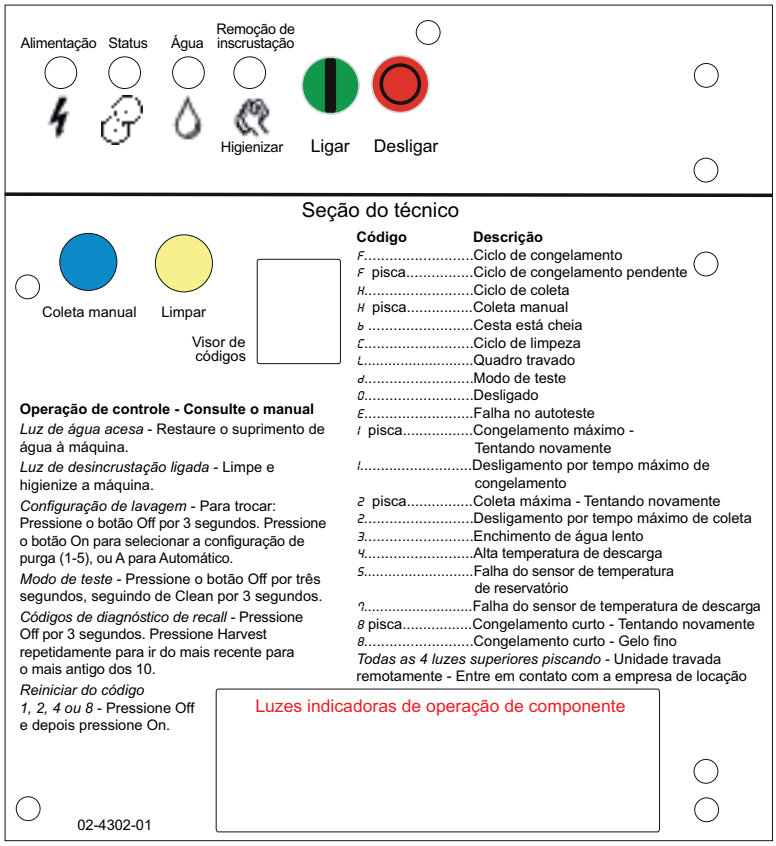

Note: A Component Indicator Light switches ON to indicate that the component is operating

Note: There are two Curtain Switch lights, SW1 and SW2. These single plate models have one curtain switch light on all the time, as a curtain switch light is ON when a curtain is either open or not present.

Overall System Type:

- Refrigeration: Mechanical, either air cooled or water cooled
- Water System: Inlet water float valve fills reservoir continuously. Purge solenoid valve opens to discharge some reservoir water once per cycle.
- Control System: Electronic
- Harvest cycle sensor: Conductivity probe
- Water full/empty sensor: Conductivity probe
- Bin Control: Curtain Switch
- Ice type: Unified
- Harvest system: Hot gas defrost with mechanical assist

Electrical Components:

- Compressor
- Contactor
- Water Pump
- Purge or purge Valve
- Fan Motor(s)
- Fan motor pressure control
- High pressure cut out
- Harvest Assist Solenoid
- Hot Gas Valve
- Controller
- Transformer – 12v AC for the controller only
- Water Sensor
- Ice Thickness Sensor
- Curtain Switch

Machine Indicator Lights

- Power
- Status
- Water
- Clean

Code Display

Main Codes- automatically displayed

F .....Freeze Cycle
F - flashes .....Freeze Cycle is Pending
H.....Harvest Cycle
H - flashes .....Manual Harvest
b.....Bin is full
C .....Clean Cycle
L.....Board Locked
d.....Test Mode
0.....Off
E.....Self Test Failed
1 - flashes ..... Max Freeze - Retrying
1 ..... Max Freeze Time Shut Down
2 - flashes .....Max Harvest - Retrying
2.....Max Harvest Time Shut Down
3.....Slow Water Fill
4.....High Discharge Temp
5.....Sump Temp Sensor Failure
7.....Discharge Temp Sensor Failure
8 - flashes .....Short Freeze - Retrying
8.....Short Freeze - Thin Ice

Setting Codes - requires push button sequence for access

Water Purge Settings

A, 1, 2, 3, 4, 5

De-scale Interval Settings

6, 5, 4, 3

Component Indicator Lights

- Condenser Fan / Aux
- Water Pump
- Purge Valve
- Water Solenoid
- Hot Gas
- Compressor
- Ready to Harvest
- Sump Empty
- Sump Full
- Curtain SW1
- Curtain SW2

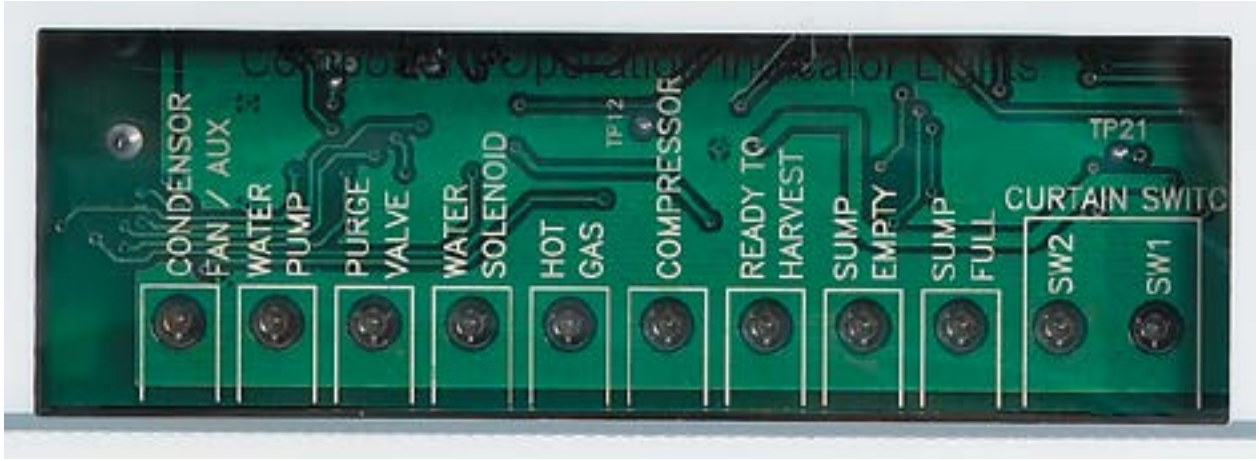

Component Indicator Light Table

System	Indicator Light On
Condenser Fan / AUX	Fan Motor Powered
Water Pump	Pump Motor Powered
Purge Valve	Purge Valve Opens
Inlet Water Solenoid Valve	Not used this model
Hot Gas	Hot Gas Valve Opens and harvest assist solenoid powered
Compressor	Contactor Closes
Ready to Harvest	Water contacting ice thickness sensor probe
Sump Empty	Open between mid sensor and common
Sump Full	Closed between top probe and mid probe
Curtain Switch	Curtain open

Freeze Cycle. At start up the controller operates the water pump and purge valve to drain the reservoir. The float valve refills the reservoir after the purge valve shuts off. When the reservoir has filled, the compressor and water pump start. After the discharge pressure has increased past the cut in point of the fan pressure control, the fan motor(s) will begin to operate and warm air will be discharged. The fan motor will switch on and off as the discharge pressure rises and falls. Water flows over the evaporator as the refrigeration system begins to remove heat. When the water temperature falls to a preset point, as measured by the water temperature sensor, the controller shuts off the water pump for 30 seconds. The freeze cycle resumes when the pump restarts and ice begins to form on the evaporator. As it forms, the water flowing over the ice moves closer and closer to the metal tip of the ice thickness sensor. When it comes into contact with the sensor for a few continuous seconds, that signals the controller that the freeze cycle is complete.

The controller may shut the air cooled fan motor off for a variable period of time to build up heat for harvest. This is dependent upon the temperature of the discharge line sensor.

Harvest Cycle. When the harvest cycle begins, the controller shuts off the fan motor, switches on the hot gas valve, and through a parallel circuit, the harvest assist solenoid. After a few seconds the purge valve opens and water is drained from the reservoir. Based on either the automatic purge or manual purge setting, the pump and purge valve will be switched off at a time determined to have drained enough water for that setting. The float valve will open to fill the reservoir anytime during the reservoir drain cycle. Harvest continues as the hot discharge gas flows into the evaporator serpentine, heating up the evaporator. At the same time the harvest assist solenoid is pushing against the back of the ice slab. When the ice releases from the evaporator, it harvests as a unit, and the harvest assist probe provides some additional force to push it off. When the ice falls off it will force the curtain open. An open curtain during the harvest cycle signals the controller that the evaporator has released its ice, and the controller will terminate harvest. If the curtain remains open, the controller will shut the machine down on bin full. Anytime harvest is complete the hot gas valve and harvest assist solenoid are shut off. The harvest assist solenoid pin returns to its normal position by spring pressure.

If the curtain re-closes after harvest, the freeze cycle will restart.

Freeze Cycle. At start up the controller operates the water pump and purge valve to drain the reservoir. The float valve refills the reservoir after the purge valve shuts off. When the reservoir has filled, the compressor and water pump start. After the discharge pressure has increased past the set point of the water regulating valve, the water regulating valve will open and warm water will be discharged out the condenser drain. The water regulating valve will modulate to maintain a relatively constant discharge pressure. Water flows over the evaporator as the refrigeration system begins to remove heat. When the water temperature falls to a preset point, as measured by the water temperature sensor, the controller shuts off the water pump for 30 seconds. The freeze cycle resumes when the pump restarts and ice begins to form on the evaporator. As it forms, the water flowing over the ice moves closer and closer to the metal tip of the ice thickness sensor. When it comes into contact with the sensor for a few continuous seconds, that signals the controller that the freeze cycle is complete.

Harvest Cycle. When the harvest cycle begins, the controller switches on the hot gas valve, and through a parallel circuit, the harvest assist solenoid. After a few seconds the purge valve opens and water is drained from the reservoir. Based on either the automatic purge or manual purge setting, the pump and purge valve will be switched off at a time determined to have drained enough water for that setting. The inlet water float valve will open to fill the reservoir anytime during the reservoir drain cycle. Harvest continues as the hot discharge gas flows into the evaporator serpentine, heating up the evaporator. At the same time the harvest assist solenoid is pushing against the back of the ice slab. When the ice\ releases from the evaporator, it harvests as a unit, and the harvest assist probe provides some additional force to push it off. When the ice falls off it will force the curtain open. An open curtain during the harvest cycle signals the controller that the evaporator has released its ice and the controller will terminate harvest. If the curtain remains open, the controller will shut the machine down. Anytime harvest is complete the hot gas valve and harvest assist solenoid are shut off. The harvest assist solenoid pin returns to its normal position by spring pressure.

If the curtain re-closes after harvest, the freeze cycle will restart

Power connected, unit previously switched Off.

Control board does a self check. If the self check fails, the unit displays an E and no further action will occur.

If the self check passes, the controller will display a 0, the curtain light(s) will be ON and the Power and Sump Empty lights will be ON.

Pushing and releasing the On button will start the ice making process.

The display will begin to blink F. The component indicator lights will switch on and off to match the following process:

- The purge valve opens and the water pump starts to empty the reservoir. This is done to discharge any excess water from ice melting into the reservoir.
- The hot gas valve and the harvest assist solenoid are energized.
- The float valve will open to fill the reservoir. The water valve can open any time the water level is low.
- After a few seconds the purge valve closes and the pump shuts off.
- When the reservoir is full the compressor switches on. Five seconds after the compressor starts the hot gas valve and the harvest assist solenoid are de-energized.

Light Information: The display shows a non-blinking F. The Power and Status Lights will be Green. The compressor, fan motor, water pump, sump full and one or two curtain switch lights will be ON.

The air cooled model's fan motor will start to turn when the discharge pressure has built up to the fan pressure control's cut in point. This is about 15 seconds after the compressor starts.

The Freeze cycle continues. The compressor, water pump, fan motor and curtain indicator lights will be ON. When the reservoir water temperature falls to a certain preset point, the water pump will shut off for 30 seconds. This is the anti-slush period. At this time the controller checks the conductivity of the water in the reservoir for the auto-purge feature. After the water pump restarts the Sump Full light will go out and neither sump lights will be on for the rest of the freeze cycle.

When the ice has built up enough so that the water flowing over the evaporator comes into continuous contact with the ice level sensor, the Ready to Harvest light will begin to blink on and off. When it has been On continuously for 5 seconds, the controller will switch the machine into a Harvest cycle.

Indicator Information: The display shows a non-blinking H. The Power and Status Lights will be Green. The compressor, hot gas valve and one or two curtain switch lights will be ON. After a few seconds the water pump, purge valve and inlet water valve lights will come on.

The fan motor(s) shut off and remain off throughout the harvest cycle.

The harvest assist solenoid is connected in parallel with the hot gas valve. Although it is energized throughout the harvest cycle, its piston does not move until the ice has become partially loosened from the evaporator plate by the action of the hot refrigerant gas passing through the evaporator serpentine.

The water pump and purge valve will shut off when the purge level setting time has been reached, either the manual time or the automatic time. The inlet water valve will remain on until it fills the reservoir. The Ready to Harvest light will switch Off when the ice falls from the evaporator.

Harvest continues until the ice slab is ejected from the evaporator and falls, opening the curtain. When the curtain opens, the magnetic reed curtain switch opens, breaking the circuit to the controller. If the curtain re-closes within 30 seconds, the controller switches the machine back into another freeze cycle. If the curtain switch remains open, the controller shuts the machine down and puts it into a standby position.

Compressor

- Operated by the compressor contactor. Uses PTCR and run capacitor.

Contractor

- Operated by the controller and the high pressure cut out switch. Line voltage coil. When energized the Compressor indicator light will be ON.

Water Pump

- Operated by the controller. When energized, the Water Pump indicator light will be ON.

Purge Valve

- Operated by the controller. Line voltage coil. When energized, the Purge Valve indicator light will be ON. Energized for a time during harvest.

Fan Motors

- Operated by the controller and the fan pressure control. Can cycle on and off in the freeze cycle, always off during harvest. When the controller has energized it, the indicator light will be ON but the fan will not turn unless the discharge pressure is high enough to close the high pressure control.
- Fan(s) may shut off near the end of the freeze cycle to build up heat for harvest. Time of shut off depends upon available heat, as measured by the discharge temperature.

High pressure cut out

- All models have a high pressure cut out switch that shuts the power off to the compressor contactor if the discharge pressure is too high. It is an automatic reset.

Harvest Assist Solenoid

- Operated by the controller in parallel with the hot gas valve. Cycles on and off at the beginning of a restart. Energized throughout the harvest cycle. Line voltage coil.

Electrical Component Details (continued)

Hot Gas Valve

- Operated by the controller in parallel with the harvest assist solenoid. Cycles on and off at the beginning of a restart. Energized throughout the harvest cycle. Line voltage coil.

Controller

- Senses ice thickness, water conductivity, water temperature, discharge temperature. Controls compressor contactor, fan motor, water pump, hot gas valve, purge valve, harvest assist solenoid. Indicates status and component operation. 12 volt.

Transformer

- 12 volt secondary, supplies power to controller only.

Water Sensor

- Three probe conductivity sensor. Used for WaterSense system.

Ice Thickness Sensor

- Single wire conductivity sensor. Circuit made from controller to ground to controller when water contacts a probe suspended over ice plate. Signals ready for harvest.

Curtain Switch

- Magnetic reed switch. Normally open, switch is closed when magnet is nearby. Switch can be connected to either J8 or J7 of controller. Curtain may be removed in the freeze cycle without affecting controller operation. Curtain removed during harvest will cause the controller to terminate harvest and shut the unit off.

Water temperature sensor

- Thermistor inserted into the water pump discharge hose. Reported temperature used by the controller to determine anti-slush cycle start time.

Discharge temperature sensor.

- Thermistor attached to the discharge line near the compressor. Reported temperature used by the controller to determine end-of-cycle-fan-off-delay time. If discharge temperature exceeds a preset maximum, controller will shut the machine off.

Note: Controller will operate machine in a default mode with thermistors disconnected from the controller. Diagnostic code #5 or 7 will be displayed during that time.

Refrigerant: R290

Compressor: Copeland or Tecumseh hermetic by model

Expansion valve: Non adjustable, internally equalized

Hot gas valve: Pilot operated, line voltage coil.

Condensers: Forced draft air, counterflow water. All air cooled models have left side air inlet. All air cooled models exhaust air out the right front.

Air filters: Mounted in left front grill and under the base on the CU3030X.

Fan pressure control. All AC. Controls fan motor operation in the freeze cycle.

High pressure cut out. All models.

Evaporator: Unified cell plate. Nickel plated copper.

- Small cube: 7/8” high x 7/8” deep x 3/8” wide
- Medium cube: 7/8” high x 7/8” deep x 7/8” wide

Water System

Float fed type. Water reservoir contains partial water charge, which is replenished during each ice making cycle.

Water valve: Float valve. Water level to be about 1 inch deep at the left end of the reservoir.

Pump: Unsealed pedestal type, twist-release mounting

Water purge valve: Solenoid type. Opens to purge water during harvest cycle.

Water Sensor: Three probe conductivity.

Distributor: ABS plastic. Evenly distributes water over the evaporator surface. Slides off the evaporator top. Removable cover for ease of cleaning.

Standard control:

- Electronic controller operating from a 12 AC volt power supply. Will operate within a voltage range between 10 and 15.5.
- Indicator lights, four visible on outside of control box: Power, Status, Water, De-scale/Sanitize.
- Accessible On - Off switch. Switch makes or breaks power to the controller - Discontinued 2/2012.
- Code Display: Displays letters and numbers to indicate cycles and diagnostic codes.
- Manual Harvest switch: Use to trigger harvest at any time.
- Clean switch: Use to initiate and finish the de-scale or sanitizing cycles.
- Component Operation Indicator Lights: Indicate the status of certain components; water level; ready for harvest; curtain switch position.
- Power Light: On when power is being supplied to the controller.
- Status Light: Green when machine is in ice making mode and is operating correctly. Blinks red when a machine malfunction has been detected.
- Water Light: Blinks red when reservoir does not fill within allowed time period.
- De-scale / sanitize: Yellow when the controller has determined it is time to de-scale and sanitize the machine. Use clean process to reset light. Time is determined by power up time and controller's setting. Standard setting is 6 months. See adjustment process.

Controller Connections:

- J1 – Ground and Power Supply
- J2 – High voltage power harness to loads
- J3 – Factory use
- J4 – Optional board connector.
- J5 - Communications port
- J6 – Thermistor connection
- J7 – Curtain switch
- J8 – Curtain switch
- J9 – Water sensor
- J10 – Ice thickness sensor
- J11 – Bin thermostat. Not applicable to this model.

Max freeze time – 84 minutes

When exceeded, the controller will attempt another freeze cycle. If the next cycle's freeze time is less than maximum, the control will continue normal ice making. If the next freeze cycle was too long, the control will again attempt another freeze cycle. If the freeze cycle is too long three consecutive cycles, the controller will shut the unit off and it must be manually reset.

Min freeze time – 6 minutes

If the controller switches the machine into harvest within 20 seconds of the minimum freeze time, the controller will harvest for a preset time and does not stop if the curtain switch opens. If this occurs again in the next three cycles, the machine will shut down and must be manually reset.

Max harvest time – 3.5 minutes

If the harvest cycle has continued for 3.5 minutes without the curtain opening, the controller will shut the machine off for 50 minutes and then restart. If there is another the machine will shut the machine off for another 50 minutes and then restart. If it fails a third consecutive time the controller will shut the machine down and must be manually reset.

- Time between resets – 50 minutes
- Number of automatic resets – 2
- Max discharge temp – 250 degrees F.
- Time interval between cleanings – 6 months power on time - adjustable in one month increments, can be set at 6, 5, 4 or 3 months of power up time.
- Manual harvest time – 3 minutes
- Minimum compressor off time – 4 minutes
- Continuous Run Time Maximum Cycles - 200

Power Interruption

The controller will automatically restart the ice machine after adequate voltage has been restored. This also occurs after the on-off switch has been cycled.

- H blinks on code display
- Status indicator light blinks
- Reservoir is drained and refilled

Default harvest is initiated. The curtain switch does not have to open to terminate harvest, harvest will continue until the default harvest time expires. Default harvest time is 3 minutes. The machine will then return to a normal freeze cycle.

Water Interruption

- Water must fill the reservoir within the pre-set time period. If it does not, the controller will all ice making to proceed. The water and status lights will blink and code 3 will be displayed. Controller will automatically check for water every 20 minutes and restart when the reservoir is full.

Set purge level, 1-5 (1 is minimum, 5 is maximum) or Automatic:

- Hold off button in for 3 seconds. Release.
- Press and release the On button to cycle through and select one of the five purge settings or to use the Automatic setting.

Recall diagnostic code:

- Hold off button in for 3 seconds. Release.
- Press and release the Harvest button to cycle through each of the last 10 error codes from most recent to oldest.

Clear diagnostic code:

- Hold Clean and Harvest buttons in for 3 seconds to clear all prior codes.

Reset control:

- Depress and release Off, then depress and release On

Start Test Mode:

- Hold Off button in for 3 seconds. Release.
- Hold Clean button in for 3 seconds. Release.

Lock / Unlock control:

- Hold On button in for 3 seconds, keep holding then press and release Off twice.

Empty reservoir:

- Shut off water supply.
- Hold Clean button in for 3 seconds. Release. Pump and purge valve will be ON for 30 seconds. Repeat as needed.

Test Mode:

- Depress Off for 3 seconds, release. Then depress Clean for 3 seconds.
- At 30 seconds the WP will turn on. You will be able to see and hear the water running over the plate. After 10 seconds the PV and HGV will turn on. Water will be purging from the machine. After 10 more seconds the compressor will start. 5 seconds later the HGV will close. The compressor will run for a total of 20 seconds. After which everything will turn off for 5 seconds. After that time the HGV will open and you'll be able to hear the hissing as the pressure is equalized. 10 seconds later the fan will turn on (if air cooled and fan control jumped). After 10 seconds all will be off and the output test will be complete.

Test Mode Sequence Table - Air or Water Cooled

Time (seconds)	On	Off
0	-	WP, HGV, Comp, Fan, PV
30	WP - 10 seconds	HGV, Comp, Fan, PV
40	WP, PV, HGV - 10 seconds	Comp, Fan
50	HGV, Comp - 5 seconds	WP, Fan, PV
55	Comp - 15 seconds	HGV, WP, Fan, PV
70	None - 5 seconds	All
75	HGV - 10 seconds	WP, Comp, Fan, PV
85	Fan - 10 seconds	HGV, WP, Comp, PV
95	None	All – Test Complete

Change De-Scale Notification Interval

Like the others, this feature is accessible only from standby (Status Light Off).

- Press and hold harvest button for 3 seconds.
- This will allow control to enter Time to Clean Adjustment State.
- Display current time to clean months on 7 segment display.
- Pressing clean button repeatedly will cycle through one of 4 possible settings:

6 months (4380 hours) (default)

5 months (3650 hrs)

4 months (2920 hrs)

3 months (2190 hrs)

No ice.

Problem	Likely Cause	Probable Solution
No power to unit	Power disconnected	Check breaker or fuse. Reset or replace, restart and check
No power to controller	Transformer open	Replace transformer
	ON-OFF Switch open or set at OFF	Switch to ON or replaced switch
Shut down on maximum water fill time	Water shut off	Restore water supply
Shut down on maximum freeze time	Water leak	Check purge valve, curtain, sump, pump hose
	Air filter clogged	Clean air filter
	Dirty condenser	Clean condenser
	Restricted location, intake air too hot	Have machine moved
	Ice thickness sensor dirty or disconnected	Check ice thickness sensor probe
	Water distributor dirty	Remove and clean water distributor
	Inlet water valve leaks through during freeze	Check inlet water valve
	Connected to hot water	Check for bleed thru from / missing check valve in building water supply
	Incomplete harvest	Check harvest system
	High pressure cut out opened	Air cooled ,check fan motor pressure control, check fan motor, check controller using test mode
		Water cooled, check for water interruption
	Fan motor pressure control open	Check fan pressure control
	Fan motor not turning	Check fan motor, check fan blade, check controller using test mode
	Water pump not pumping	Check pump motor, check controller using test mode

Problem	Likely Cause	Probable Solution
Shut down on maximum freeze time	Pump hose disconnected	Check hose
	Compressor not operating	Check compressor contactor, check controller using test mode
		Check compressor start components, check PTCR resistance and temperature
		Check compressor voltage
		Check compressor windings
	Low refrigerant charge	Add some refrigerant and restart unit. If cycle time improves, look for leak.
	Hot gas valve leaks through during freeze	Check hot gas valve for hot outlet during freeze
	Thermostatic expansion valve bulb loose	Check bulb
	Thermostatic expansion valve producing very low or very high superheat	Check evaporator superheat, change TXV if incorrect
	Compressor inefficient	Check compressor amp draw, if low and all else is correct, change compressor

Problem	Likely Cause	Probable Solution
Shut down on maximum harvest time	Ice bridge thickness too small, not enough ice to open curtain	Check and adjust if needed
	Ice bridge thickness too large, ice frozen to evaporator frame	Check and adjust if needed
	Purge valve does not open, water melts ice brid	Check purge valve
	Incomplete ice formation	Check water distributor for partially plugged holes
	Curtain out of position	Check curtain for swing restriction
	Curtain switch does not open when curtain does	Check switch with ohmmeter
	Machine in very cold ambient	Move machine to a warmer location
	Hot gas valve does not open	Check hot gas valve, check controller using test mode
	Harvest assist probe out of position – ejector pin not retracted	Check harvest assist mechanism – spring should retract pin
	Damaged evaporator	Check evaporator surface
	Fan motor stays on during harvest	Check controller using test mode
Shut down on minimum freeze time	Grounded ice thickness sensor	Check sensor for dirt and position. Clean and check gap to evaporator surface.
	Water flow incorrect near sensor	Check water distributor for proper assembly, attachment and for scale build up. Correct as needed.

Air Cooled

Problem	Likely Cause	Probable Solution
Long freeze cycle	Dirty air filter	Clean filter
	Dirty condenser	Clean condenser
	Hot ambient	Reduce room air temperature
	Water leak	Check purge valve, check curtain
	Water inlet valve leaks through	Check inlet valve
	Low on refrigerant	Add refrigerant, if cycle time drops, check for leak
	Incorrect superheat	Check evaporator superheat, if significantly low or high, replace TXV
	Fan(s) cycle on and off	Check pressures fans cycle at. Replace fan pressure switch if too low
Long Harvest Cycle	Dirty evaporator	De-scale water system
	No harvest assist	Check harvest assist solenoid
	Bridge thickness too big	Check and adjust bridge thickness
	Machine in very cool ambient	
False bin full signal	Ice jammed in between curtain and sump	Clear ice away
	Curtain does not close correctly	Check curtain for proper swing

Makes excessive noise - air cooled

Problem	Likely Cause	Probable Solution
Fan blade vibrates	Blade is bent	Replace fan blade
	Fan motor mount is broken	Replace motor mount
Compressor vibrates	Mounting bolts loose	Tighten bolts
Water pump vibrates	Pump bearings worn	Replace pump
Panels vibrate	Mounting screws loose	Tighten screws

This ice system requires three types of maintenance:

- Remove the build up of mineral scale from the ice machine's water system and sensors.
- Sanitize the ice machine's water system and the ice storage bin.
- Clean or replace the air filter and clean the air cooled condenser (air cooled models only).

It is the User's responsibility to keep the ice machine and ice storage bin in a sanitary condition. Without human intervention, sanitation will not be maintained. Ice machines also require occasional cleaning of their water systems with a specifically designed chemical. This chemical dissolves mineral build up that forms during the ice making process.

Sanitize the ice storage bin as frequently as local health codes require, and every time the ice machine is cleaned and sanitized.

The ice machine's water system should be cleaned and sanitized a minimum of twice per year.

Note: The front On/Off switch must be in the ON position during the scale removal and sanitation process.

1. Remove the left front louvered panel.
2. Remove the top panel
3. If the machine is operating, push and release the Harvest button. When the machine completes the Harvest cycle it will stop. If the bin is full (b shows in display) push and release the Off button.
4. Remove all ice from the storage bin
5. Push and release the Clean button. The yellow Clean light will blink and the display will show C. The machine will drain the reservoir and refill it. Go onto the next step when the reservoir has filled.

Scotsman Ice Machine Cleaner contains acids. These compounds may cause burns.
If swallowed, DO NOT induce vomiting. Give large amounts of water or milk. Call Physician immediately. In case of external contact, flush with water.
KEEP OUT OF THE REACH OF CHILDREN

6. Pour 8 ounces of Scotsman Clear 1 ice machine scale remover into the reservoir.
7. Allow the ice machine scale remover to circulate in the water system for at least 10 minutes.
8. Push and release the Clean button again. The yellow Clean light will be on continuously and the machine will drain and refill the reservoir repeatedly to purge out the ice machine scale remover and residue.
9. Allow the drain and refill process to continue for at least 20 minutes.
10. Push and release the Off button. The clean cycle will stop and the display will show 0.

Note: If unit has not been de-scaled for an extended period of time and significant mineral scale remains, repeat steps 5-10.

11. Mix a cleaning solution of 1 oz of ice machine scale remover to 12 ounces of water.
12. Locate curtain, push in on edge of curtain by pivot pin to release it. Pull curtain out of machine.
13. Remove water distributor from ice machine. Inspect distributor for restricted orifice holes. Be sure all holes are fully open.

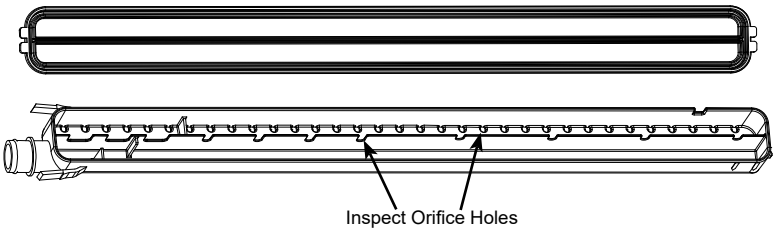

1. Locate ice thickness sensor. Squeeze mounting legs together to release sensor. Wash the metal surfaces of the sensor and the adjustment screw with ice machine scale remover solution. Also wash the water distributor and curtain with the ice machine\ cleaner solution.
2. Locate water sensor. Squeeze catches together and pull up to remove sensor. Wash metal surfaces of sensor with ice machine scale remover solution.
3. Mix a solution of sanitizer.

Note: A possible sanitizing solution may be made by mixing 1 ounce of liquid household bleach with 2 gallons of warm (95-115oF.) potable water.

---

4. Thoroughly wash all surfaces of the ice thickness sensor, water level sensor, curtain inside of the top panel and the water distributor with the sanitizer solution.
5. Wash all interior surfaces of the freezing compartment, including storage bin liner with the sanitizer solution.
6. Return water level sensor, ice thickness sensor, water distributor and curtain to their normal positions.
7. Push and hold the clean button to drain the reservoir. Push and release the clean button again and when the purge valve indicator light goes out, immediately pour the remaining cleaning solution into the reservoir.
8. Circulate the sanitizer solution for 10 minutes, then push and release the Clean button.
9. Allow the water system to be flushed of sanitizer for at least 20 minutes, then push and release the Off button.
10. Push and release the On button to resume ice making.
11. Return the top panel and front louvered panel to their normal position and secure with the original fasteners.

Air cooled condenser filter

1. Remove left front grill .
2. Wash the dust and grease off the filter.
3. Return it to its original position.

Do not operate the machine without the filter in place except during cleaning.

Air cooled condenser

If the machine has been operated without a filter the air cooled condenser fins will need to be cleaned.

They are located under the fan blades. The services of a refrigeration technician will be required to clean the condenser.

Exterior Panels

Fingerprints, dust and grease build up on the panels will require occasional cleaning.

Water filters

If the machine has been connected to water filters, check the cartridges for the date they were replaced or for the pressure on the gauge. Change cartridges if they've been installed more than 6 months or if the pressure drops too much when the ice machine fills with water.

All electrical components in this ice machine can be diagnosed with a volt-ohmmeter.

Curtain Switch:

1. Test using the controller's indicator lights. Observe SW1 or SW2. Open and close the curtain. When the curtain is opened, the SW light will be ON. When the curtain gets to within a half inch of closing (at the switch) the SW light will go OUT.
2. Test with an ohmmeter. Disconnect electrical power. Open the control box cover. Unplug the curtain switch lead from the controller. Connect an ohmmeter to the leads of the switch. Open and close the curtain. When the curtain is closed, the switch is closed and there will be continuity. When the curtain is open, the switch is open and the circuit will be open.
3. Test the controller's curtain switch circuit by jumping the connectors on J1 or J2 together. Reconnect electrical power. When jumped, the matching SW light will go out. When unplugged or open, the SW light will be ON.

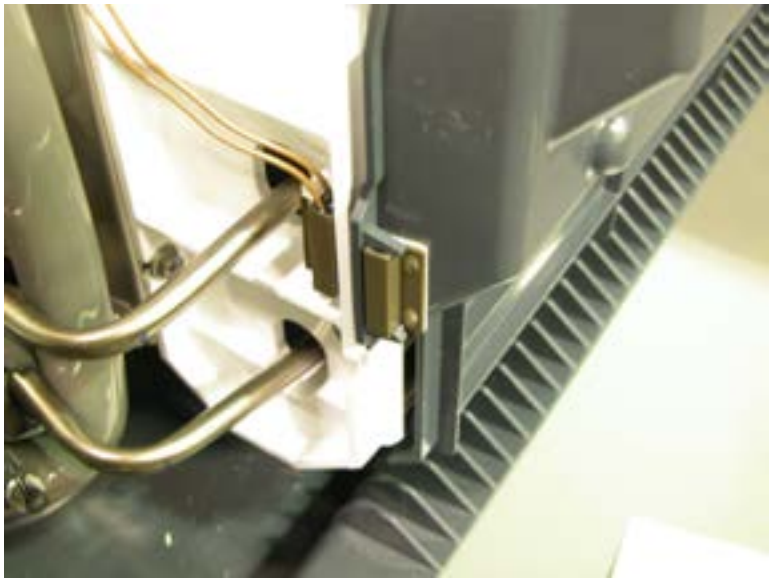

Curtain Switch

Ice Thickness Sensor

1. Test using the controller's indicator light. Observe the Ready To Harvest light. Shut the machine off. Use a wire to connect the metal part of the Ice Thickness sensor to the evaporator or simply remove the Ice Thickness Sensor and touch its metal surface to the metal control box wall. The Ready for Harvest light should go ON.
2. Test with an Ohmmeter. Disconnect electrical power. Open the control box cover. Unplug the ice thickness sensor lead from the controller. Connect an ohmmeter lead to the ice thickness sensor lead, touch the other ohmmeter lead to the ice machine chassis. There must be an open circuit. If there is continuity, the sensor must be replaced. If there is no continuity, touch the ohmmeter lead to the metal part of the ice thickness sensor. There should be continuity. If open, check the ice thickness sensor for scale build up. Clean and recheck. If still open, replace the ice thickness sensor.
3. Test the controller's ice thickness sensor circuit by connecting a wire from J10 to ground. Reconnect electrical power. The Ready for Harvest light should go ON.

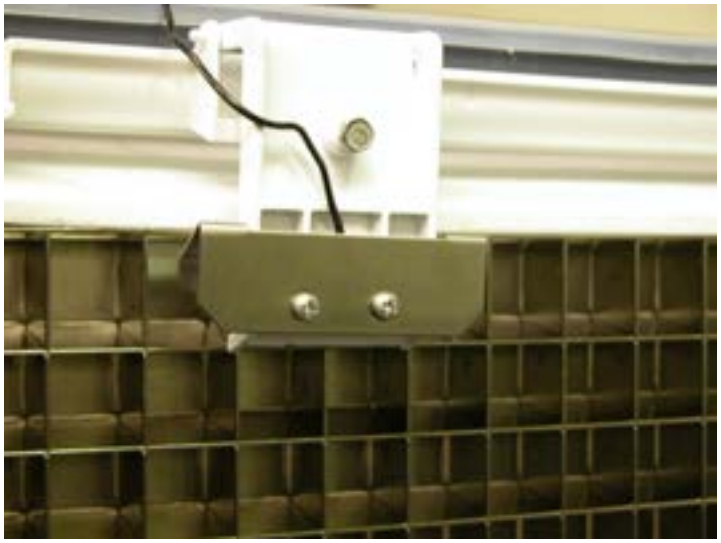

Ice Thickness Sensor

Water Sensor

The water sensor has two functions, the first is to stop the machine from operating if there is no water, the second is to sense the conductivity of the water supply. This test is for sensing that there is water in the sump.

1. Test using the controller's indicator lights (sump empty and sump full). Shut the water supply to the unit off. With power supplied to the unit, push and hold the Clean button until water is pumped out of the reservoir. The sump empty light should be On. If not, check the water level and repeat the drain cycle if needed. Then add water, when there is water in the reservoir, the sump empty light go out. When that occurs, the sensor and its circuit are good. The sump full light has no function in this model.
2. Test with an ohmmeter. Disconnect electrical power. Open the control box cover. Unplug the connector at J9. Locate water level sensor and remove it from the sump cover. Test 1: Place one lead of the ohmmeter on the longest probe and the other on the controller end of the red wire, there should be continuity. Test 2: Place one lead on the controller end of the white wire and the other on the mid-length probe, there should be continuity. Test 3: Place on lead on the controller end of the black wire and the other on the shortest probe, there should be continuity. If not, clean the probes and recheck.

Temperature Sensors

1. Check controller. If the sensor calibration is completely out of range, the code display will read either 5 or 7.
2. Check with an ohmmeter. Open control box cover, unplug sensor from J6. Water temperature probe: Measure the temperature of the water. Push and release the clean button. Wait one minute. Measure the resistance of the water probe (two leads next to the open socket) and compare to the resistance in the chart for that temperature. Any reading within 1000 ohms is acceptable. Discharge sensor: Measure the temperature of the discharge line as close to the sensor as possible. Measure the resistance of the discharge temperature sensor (two leads farthest away from the open socket on the harness connector) and compare to the resistance in the chart for that temperature. Any reading within 1000 ohms is acceptable.
3. Alternate procedure: Remove both water and discharge sensors from their places on the ice machine. Put both into a container of ice water. Put a thermometer in the water. When the thermometer is at 32 degrees F., check the resistance of each sensor. The resistance should be within 1000 ohms of 32649.

Deg. F · Ohms	Deg. F · Ohms	Deg. F · Ohms	Deg. F · Ohms	Deg. F · Ohms
0· · · · 85325	51 · · · 19381	102 · · 5569	153 · · 1927	204 · · 774
1· · · · 82661	52 · · · 18873	103 · · 5446	154 · · 1890	205 · · 761
2· · · · 80090	S3 · · · 18381	104 · · 5325	155 · · 1855	206 · · 749
3· · · · 77607	54 · · · 17903	105 · · 5208	156 · · 1819	207 · · 737
4· · · · 75210	55 · · · 17439	106 · · 5093	157 · · 1785	208 · · 724
5· · · · 72896	56 · · · 16988	107 · · 4981	158 · · 1752	209 · · 713
6· · · · 70660	57 · · · 16551	108 · · 4872	159 · · 1719	210 · · 701
7· · · · 68501	58 · · · 16126	109 · · 4766	160 · · 1687	211 · · 690
8· · · · 66415	59 · · · 15714	110 · · 4663	161 · · 1655	212 · · 679
9· · · · 64400	60 · · · 15313	111 · · 4562	162 · · 1624	213 · · 668
10 · · · 62453	61 · · · 14924	112 · · 4463	163 · · 1594	214 · · 657
11 · · · 60571	62 · · · 14546	113 · · 4367	164 · · 1565	215 · · 646
12 · · · 58752	63 · · · 14179	114 · · 4273	165 · · 1536	216 · · 636
13 · · · 56995	64 · · · 13823	115 · · 4182	166 · · 1508	217 · · 626
14 · · · 55296	65 · · · 13476	116 · · 4093	167 · · 1480	218 · · 616
15 · · · 53653	66 · · · 13139	117 · · 4006	168 · · 1453.	219 · · 606
16 · · · 52065	67 · · · 12812	118 · · 3921	169 · · 1427	220 · · 597
17 · · · 50529	68 · · · 12494	119 · · 3838	170 · · 1401	221 · · 587
18 · · · 49043	69 · · · 12185	120 · · 3757	171 · · 1375	222 · · 578
19 · · · 47607	70 · · · 11884	121 · · 3678	172 · · 1350	223 · · 569
20 · · · 46217	71 · · · 11592	122 · · 3601	173 · · 1326	224 · · 560
21 · · · 44872	72 · · · 11308	123 · · 3526	174 · · 1302	225 · · 551
22 · · · 43571	73 · · · 11031	124 · · 3452	175 · · 1279	226 · · 543
23 · · · 42313	74 · · · 10763	125 · · 3381	176 · · 1256	227 · · 534
24 · · · 41094	75 · · · 10502	126 · · 3311	177 · · 1234	228 · · 526
25 · · · 39915	76 · · · 10247	127 · · 3243	178 · · 1212	229 · · 518
26 · · · 38774	77 · · · 10000	128 · · 3176	179 · · 1190	230 · · 510
27 · · · 37669	78 · · · 9760	129 · · 3111	180 · · 1169	231 · · 502
28 · · · 36600	79 · · · 9526	130 · · 3047	181 · · 1149	232 · · 495
29 · · · 35564	80 · · · 9299	131 · · 2985	182 · · 1129	233 · · 487
30 · · · 34561	81 · · · 9077	132 · · 2924	183 · · 1109	234 · · 480
31 · · · 33590	82 · · · 8862	133 · · 2865	184 · · 1090	235 · · 472
32 · · · 32649	83 · · · 8652	134 · · 2807	185 · · 1071	236 · · 465
33 · · · 31738	84 · · · 8448	135 · · 2751	186 · · 1052	237 · · 458
34 · · · 30855	85 · · · 8250	136 · · 2696	187 · · 1034	238 · · 451
35 · · · 30000	86 · · · 8056	137 · · 2642	188 · · 1016	239 · · 444
36 · · · 29171	87 · · · 7868	138 · · 2589	189 · · 998	240 · · 438
37 · · · 28368	88 · · · 7685	139 · · 2537	190 · · 981	241 · · 431
38 · · · 27589	89 · · · 7507	140 · · 2487	191 · · 965	242 · · 425
39 · · · 26835	90 · · · 7333	141 · · 2438	192 · · 948	243 · · 419
40 · · · 26104	91 · · · 7164	142 · · 2390	193 · · 932	244 · · 412
41 · · · 25395	92 · · · 6999	143 · · 2343	194 · · 916	245 · · 406
42 · · · 24707	93 · · · 6839	144 · · 2297	195 · · 901	246 · · 400
43 · · · 24041	94 · · · 6683	145 · · 2252	196 · · 885	247 · · 394
44 · · · 23394	95 · · · 6530	146 · · 2208	197 · · 871	246 · · 389
45 · · · 22767	96 · · · 6382	147 · · 2165	198 · · 856	249 · · 383
46 · · · 22159	97 · · · 6238	148 · · 2123	199 · · 842	250 · · 377
47 · · · 21569	98 · · · 6097	149 · · 2082	200 · · 828	
48 · · · 20997	99 · · · 5960	150 · · 2042	201 · · 814	
49 · · · 20442	100 · · 5826	151 · · 2003	202 · · 800	
50 · · · 19903	101 · · 5696	152 · · 1965	203 · · 787	

Compressor

Failure to start.

All have resistance start, capacitor run type motors. Check voltage to compressor at the contactor. Compare the idle voltage (compressor off) to the active voltage (compressor starting). The supply voltage must not be less than the lowest rated voltage for the ice machine. If the voltage is correct, proceed to the next step.

Check starting components. All models use a PTCR to cut power to the start winding after the compressor has started. Check the PTCR for resistance. The resistance check must be when the PTCR is at room temperature – any temperature between 50 and 100.

At that temperature resistance should be very low between 25 and 50 ohms. Also check resistance to ground, it should be infinite. If the PTCR is good, check the compressor windings.

Measure resistance from Common to ground. It should be infinite. Measure resistance from Common to Run – compare to the chart. Measure resistance from Common to Start – compare to the chart.

Compressor check for high amp draw. Measure amp draw of starting circuit. If it does not drop off immediately after start up, the PTCR should be replaced. It is not practical to check a PTCR for resistance at high temperatures as the resistance drops very fast as the PTCR's temperature falls. If the compressor is drawing excessive amps but is operating, the run capacitor may be open. Disconnect electrical power, discharge the capacitor and measure its resistance. If open, replace it. If shorted to ground, replace it.

Any time the compressor is replaced, the PTCR and run capacitor should also be replaced, or if the model was equipped with a potential relay, start capacitor and run capacitor, those should be replaced with the compressor. Most Scotsman service compressors include those parts.

Fan motor

1. Test using the controller's indicator lights.

Note: Fan pressure control connection must be jumped to perform this test.

Put the controller into test mode (depress Off for 3 seconds then depress Clean for 3 seconds). At the end of the test cycle, the fan motor will be powered and the Condenser Fan motor indicator light will be on. The fan motor should start and run at that time. If it does not, repeat the test but check the voltage to the fan motor, it must receive full voltage at the fan motor lead connection at the end of the test. If there is voltage and the motor does not operate, replace the motor. If there is no voltage, check the controller high voltage harness connection. The fan motor lead is the top wire. Check voltage from it to ground, at the end of the test, when the fan motor indicator light is On, there must be voltage from this pin to ground. Note: high voltage power is supplied to the bottom pin from the contactor line. Refer to the machine wiring diagram as needed.

2. Test using an ohmmeter.

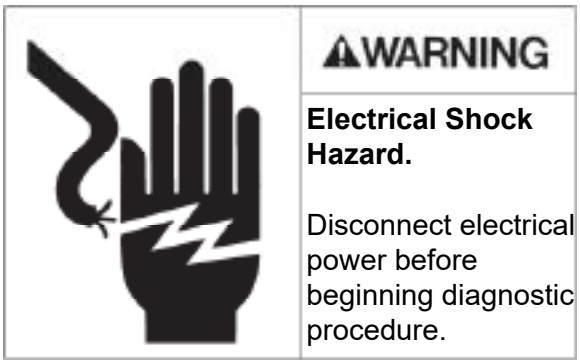

Disconnect electrical power.

Unplug fan motor from harness. Measure fan motor winding resistance. If open, replace the fan motor.

Water Pump

1. Test using the controller's indicator lights. Check the indicator light during the freeze cycle. The light will be On for all but the 30 second anti-slush period, so observe the light for one minute. When it is On, check the water pump, it should be operating. If not, check voltage to the pump. If low check the voltage from the controller to ground. The water pump pin is number 6. If there is voltage at that pin to ground, but very low voltage at the pump motor, there must be a broken wire in the harness. If the voltage is low at pin 6, the controller should be replaced.
2. Test using an ohmmeter.

Disconnect electrical power.

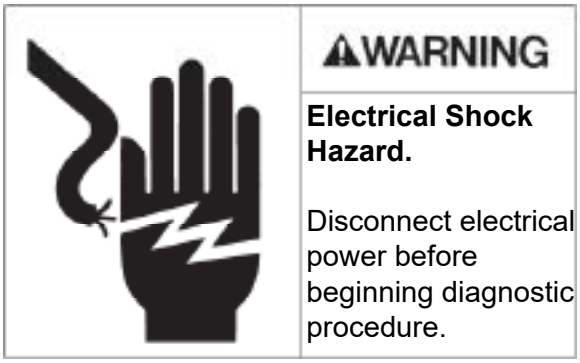

Unplug the water pump motor leads from the harness. Measure the resistance of the motor windings. If open, replace the pump. Measure resistance to ground. If there is any, replace the pump.

Purge valve

1. Test using the controller's indicator lights. Shut unit off by holding the Off button for 3 seconds. Wait four minutes. Push and release the On button, observe the Purge Valve indicator light. As the unit drains the reservoir, the purge valve will be powered. When it gets power, the indicator light will be ON. If the purge valve does not open to drain the reservoir when its indicator light is on, do a voltage check. Shut the unit down by holding the Off button in for 3 seconds. Unplug the harness connection from the purge valve. Wait four minutes. Push and release the On button to restart the machine. As the unit drains the reservoir, the purge valve connection should receive full voltage. If it does, the purge valve should be replaced. If there is no voltage, check voltage from the controller to ground. The purge valve pin is 3 (dump valve on wiring diagram). If there is voltage from that pin to ground, but low voltage at the valve harness connection, the harness has a broken wire or poor connection and must be replaced. If the voltage to ground is low, the controller should be replaced.

Note: The coil of this valve is internally rectified, and will normally show infinite resistance when tested with an ohmmeter.

Compressor contactor

1. Test using the controller's indicator lights. When the unit is in ice making mode the compressor contactor will have power. Check the Compressor indicator light, when it is on the compressor contactor will have pulled in. If it is not, do a voltage check. Place voltmeter leads on the coil of the contactor. There should be full voltage . If there is full voltage present and the contactor has not pulled in, replace the contactor. If there is no voltage check if the high pressure cut out is open. If the high pressure cut out is closed, check for voltage from the controller to ground. The contactor pin is 4. Check from 4 to ground when the compressor indicator light is on. There should be voltage. If not, replace the controller. If there is voltage at the controller but not at the contactor coil, the harness wires or connectors are damaged and must be replaced.
2. Test using an ohmmeter. Disconnect electrical power.

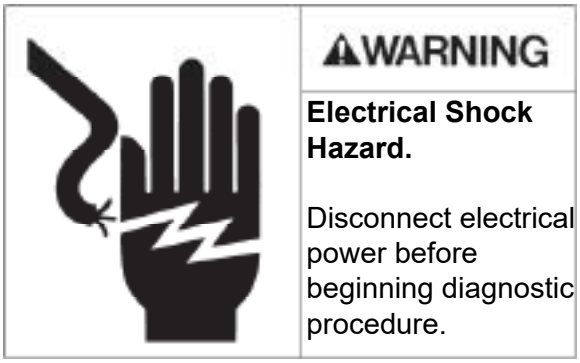

Test the coil of the contactor for continuity or shorts to ground. Replace if open or shorted.

3. Check connections and contacts. Be sure connections are tight and that the contacts are not burnt. Replace any contactor with burnt contacts.

Pressure switches

There are two pressure switches: Fan and High Pressure cut out.

Fan. The fan pressure switch will open to shut the fan motor off at a certain pressure and re-close at a preset higher pressure.

High pressure cut out. The high pressure cut out switch will open at a preset pressure, shutting off power to the compressor contactor. After the pressure has fallen to another preset level, the switch will re-close and the contactor coil will be energized.

To Test Fan Pressure Switch:

A. Attach refrigeration gauge set to high side port.
B. Unplug both wires from fan pressure control. **Be SURE the wire's terminals are wrapped in electrical tape to prevent short circuits to ground during the test.**
C. Connect ohmmeter to terminals of fan pressure control.
D. Switch ice machine on, observe pressure that the pressure control closes at, compare to spec. Switch unit off, allow system to equalize, observe pressure the pressure control opens at, compare to spec.

To Test High Pressure Switch:

A. Attach refrigeration gauge set to high side port.
B. Unplug fan motor or shut water off if water cooled.
C. Measure voltage between contactor side terminal of high pressure control and ground.
D. Switch ice machine on, observe pressure that the pressure control opens at, compare to spec. Allow system to equalize, observe the pressure that the pressure control closes at, compare to spec.

Transformer

Check secondary voltage, it must be between 10 and 15.5 AC volts. Replace if no voltage is output or if above or below the acceptable voltage..

Controller

The controller's software operation is confirmed if it is functioning. Execute the test to confirm its operation of the loads. Illumination of a diagnostic code (other than E) is not an indication of controller failure. Each code requires its own diagnosis.

Harvest assist solenoid

1. Test using the controller's indicator lights. Push and release the Harvest button. The Hot Gas indicator light will be on. At the same time the Harvest Assist Solenoid will be powered. If the ice on the evaporator is thin, the solenoid will extend. If the ice is nearly full sized, the solenoid will press against the ice until it releases from the evaporator, then the solenoid probe will extend. If the probe extends, the solenoid is good. If not, do a voltage check. Unplug the high voltage harness from the harvest assist solenoid. Attach a voltmeter to the harness connector. Push and release the Harvest button. There should be full voltage at the connector. If there is and the solenoid does not extend, replace the solenoid. If full voltage is not present, check voltage at the controller. If there is no voltage, check voltage from the controller to ground. The hot gas / harvest assist pin is 5. If there is voltage from that pin to ground, but low voltage at the solenoid harness connection, the harness has a broken wire or poor connection and must be replaced. If the voltage to ground is low, the controller should be replaced.

Note: The coil of this valve is internally rectified, will normally show infinite resistance when tested with an ohmmeter.

Hot Gas Valve

1. Test using the controller's indicator lights. If the unit is running, or has been off for more than 4 minutes, push and release the Harvest button. The Hot Gas indicator light will be on and the hot gas valve will be energized. The compressor will force discharge gas into the evaporator inlet, warming it. If the evaporator inlet does not warm up, do a voltage check. Shut the unit off by holding the Off button in for 3 seconds. Unplug the high voltage harness from the hot gas solenoid. Attach a voltmeter to the harness connector. Wait 4 minutes. Push and release the Harvest button. There should be full voltage at the connector. If there is and the solenoid does not open, replace the solenoid coil. If full voltage is not present, check voltage at the controller. If there is no voltage, check voltage from the controller to ground. The hot gas pin is 5. If there is voltage from that pin to ground, but low voltage at the solenoid harness connection, the harness has a broken wire or poor connection and must be replaced. If the voltage to ground is low, the controller should be replaced
2. . Test with an ohmmeter.

Disconnect electrical power.

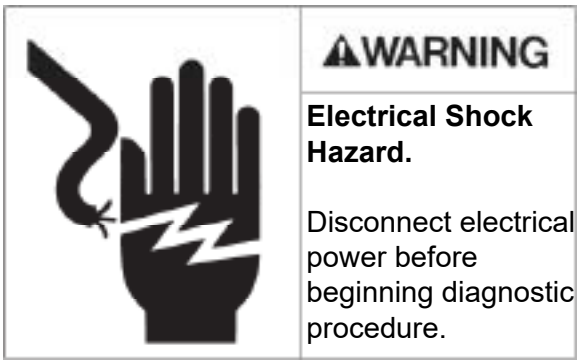

Unplug high voltage harness from hot gas or vapor valve. Measure resistance of hot gas or vapor valve coil. If open, replace the coil.

Pressure Control Information

	Cut In (PSIG)	Cut Out (PSIG)
Fan Pressure Control	TBD	TBD
High Pressure Cut Out AC	TBD	TBD
High Pressure Cut Out WC	TBD	TBD

Compressor Amp Draws

Voltage	**Brand**	**Base Model**	**Freeze**	**Harvest**
115	TBD	TBD	TBD	TBD
230/60	TBD	TBD	TBD	TBD

Refrigerant Charge

Model	Charge, Oz.
CU3030AX	5.25
CU3030WX	5.25

Superheat

- CU3030X - 15oF falling during freeze to ~8

BTUH

- CU3030X - 4300

CU3030AX

		Ambient Air Temp., °F.		
		70	80	90
Cycle Time (minutes)	Water Temp 50 70 80 90	TBD	TBD	TBD
Suction Pressure (PSIG)	End of Freeze Harvest	TBD	TBD	TBD
Discharge Pressure (PSIG)	End of Freeze Harvest	TBD	TBD	TBD

CU3030WX

		Ambient Air Temp., °F.		
		70	80	90
Cycle Time (minutes)	Water Temp 50 70 80 90	TBD	TBD	TBD
Suction Pressure (PSIG)	End of Freeze Harvest	TBD	TBD	TBD
Discharge Pressure (PSIG)	End of Freeze Harvest	TBD	TBD	TBD

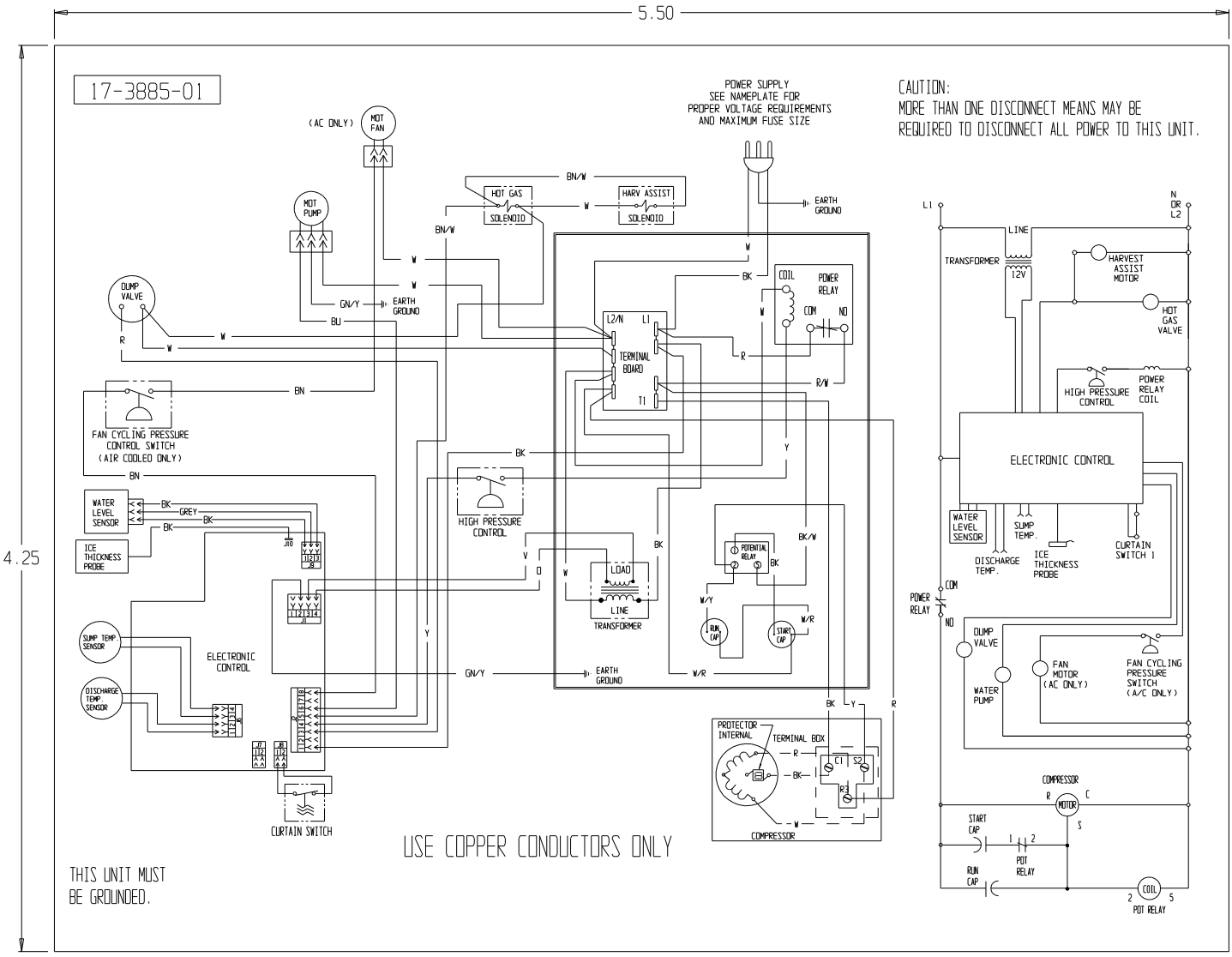
5.50
4.25
17-3885-01
CAUTION:
MORE THAN ONE DISCONNECT MEANS MAY BE
REQUIRED TO DISCONNECT ALL POWER TO THIS UNIT.
POWER SUPPLY
SEE NAMEPLATE FOR
PROPER VOLTAGE REQUIREMENTS
AND MAXIMUM FUSE SIZE
(AC ONLY)
MOT FAN
MOT PUMP
DUMP VALVE
HOT GAS SOLENOID
HARV ASSIST SOLENOID
EARTH GROUND
TERMINAL BOARD
L2/N
L1
T1
COIL
POWER RELAY
COM
NO
FAN CYCLING PRESSURE CONTROL SWITCH (AIR COOLED ONLY)
WATER LEVEL SENSOR
ICE THICKNESS PROBE
HIGH PRESSURE CONTROL
POTENTIAL RELAY
LOAD
LINE
TRANSFORMER
RUN CAP
START CAP
SUMP TEMP. SENSOR
DISCHARGE TEMP. SENSOR
ELECTRONIC CONTROL
CURTAIN SWITCH
PROTECTOR INTERNAL
TERMINAL BOX
COMPRESSOR
USE COPPER CONDUCTORS ONLY
THIS UNIT MUST
BE GROUNDED.
N OR L2
LINE
TRANSFORMER
12V
HARVEST ASSIST MOTOR
HOT GAS VALVE
HIGH PRESSURE CONTROL
POWER RELAY COIL
ELECTRONIC CONTROL
WATER LEVEL SENSOR
SUMP TEMP.
DISCHARGE TEMP.
ICE THICKNESS PROBE
CURTAIN SWITCH 1
POWER RELAY
DUMP VALVE
WATER PUMP
FAN MOTOR (AC ONLY)
FAN CYCLING PRESSURE SWITCH (A/C ONLY)
COMPRESSOR
MOTOR
START CAP
RUN CAP
POT RELAY
COIL
POT RELAY

Water Reservoir

1. Shut water supply OFF.
2. Remove left grill.
3. Push and hold the Off button until the unit stops
4. Push and hold the Clean button until a - appears in the code display. The pump will drain the reservoir.
5. Push two tabs (located left of the pump motor) in until they release from the pump bracket.
6. Push in release ring on water fitting and pull water inlet tube out.

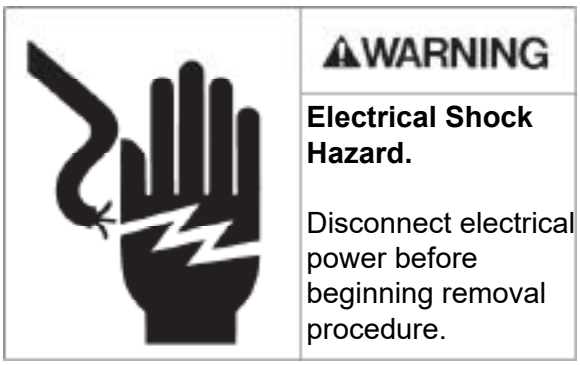

7. Disconnect electrical connection from pump motor.
8. Remove discharge hose from pump
9. Lift up on pump bracket to release it from the back wall. Pull forward and out of the machine.
10. Remove one screw holding the reservoir to the evaporator bracket (at the right).
11. Reservoir will drain into storage bin.
12. Push up under back of reservoir and pull forward to release reservoir tabs from back panel.

Float Valve

1. Top panel removal will aid in this procedure.
2. Remove left grill.
3. Push and hold the Off button until the unit stops or a O appears in the code display.
4. Push and hold the Clean button until a - appears in the code display. The pump will drain the reservoir.
5. Push in two tabs and release reservoir from pump bracket.
6. Unplug pump from power harness
7. Disconnect pump discharge hose from pump
8. Push release ring to disconnect water supply tube from water inlet fitting.
9. Pull up on pump & bracket until it releases from the back panel.
10. Remove pump, bracket and float valve from unit.
11. Remove float valve from bracket, replace with a new part.

Water Pump

1. Disconnect electrical power.
2. Disconnect electrical connection from pump motor.

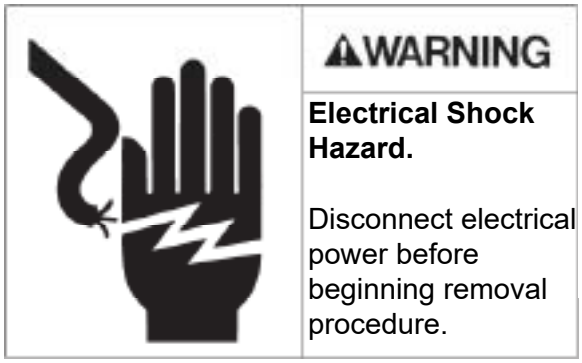

3. Remove discharge hose from pump
4. Rotate water pump CCW until it is in the release position, then pull the pump up and out.

Purge Valve

1. Remove left front grill.
2. Push and hold the Off button to shut the machine off.
3. Disconnect electrical power.
4. Perform all procedures to remove the ice storage bin.
5. Unplug wires from valve coil.

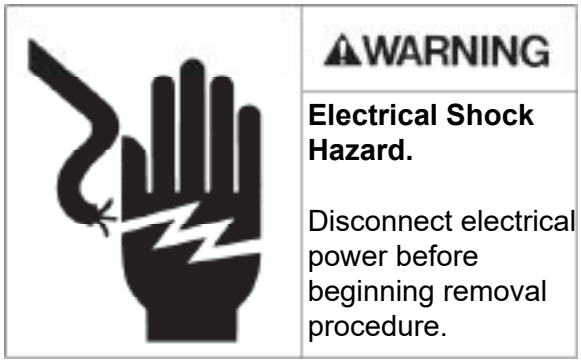

Note: The coil can be removed from the valve body by rotating it 1/8 turn CW. After removal of the coil the spring and plunger can be taken out.

6. Remove screws holding valve to mounting bracket.
7. Remove inlet and outlet hoses
8. Remove valve from cabinet.
9. Reverse to reassemble

Water level sensor

1. Switch the machine off.
2. Remove the top panel.
3. Locate water level sensor.
4. Squeeze the locking tabs together and pull the sensor up and out of the sump.
5. Unplug the electrical connection from the sensor.
6. Reverse to reassemble.

Fan Blade and/ or Motor

1. Disconnect electrical power.

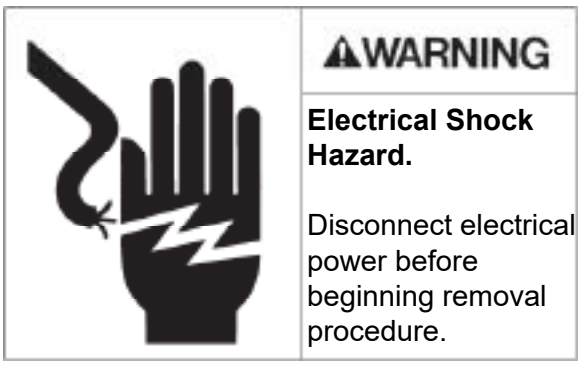

2. Go thru all steps to remove the ice storage bin.
3. Unplug fan motor from harness.
4. Remove four 3/8” hex head cap screws securing fan motor brackets to shroud.
5. Remove fan blade. If installing new fan blade, replace blade at this point and reverse to reassemble.

Note: Fan blade mounts so it is cupped to blow air into condenser. See photo.

6. Remove mounting screws securing fan motor to brackets.
7. Replace fan motor.
8. Attach fan blade to motor.
9. Return brackets to motor.
10. Reattach fan motor assembly to shroud.
11. Reconnect fan motor.
12. Return bin to chassis.
13. Reconnect power, restart unit. Check operation.

Compressor

1. Remove left front grill.
2. If the machine was in operation, push and release the Harvest button to shut it down. Wait until the harvest cycle has ended so the evaporator has no ice on it.
3. Go thru all steps to remove the bin.
4. Open the replacement compressor box. Check the compressor nameplate, be SURE that the replacement compressor is the correct one for the unit.
5. Disconnect electrical power.
6. Recover refrigerant.
7. Remove compressor terminal cover and disconnect electrical leads.
8. Remove all the mounting bolts.
9. Open both discharge and suction access valves
10. Connect nitrogen to discharge access valve.
11. Open nitrogen valve.
12. Unsweat the suction, discharge and process tubes.
13. Unsweat the drier from the liquid line. Remove it.
14. Shut the nitrogen valve.
15. Remove the compressor from the ice machine. Note: Some models may require the control box to be moved slightly to allow compressor replacement.
16. Immediately place new compressor in ice machine.
17. Open nitrogen bottle and braze compressor suction, discharge and process joints together. Braze new drier into system.
18. Shut off nitrogen, shut access valves.
19. Evacuate to at least 300 microns.
20. Replace PTCR and run capacitor.
21. Weigh in the nameplate charge. Check for leaks.
22. Reconnect electrical leads.
23. Attach compressor terminal cover.
24. Reconnect electrical power.
25. Return bin and all panels to their original positions.

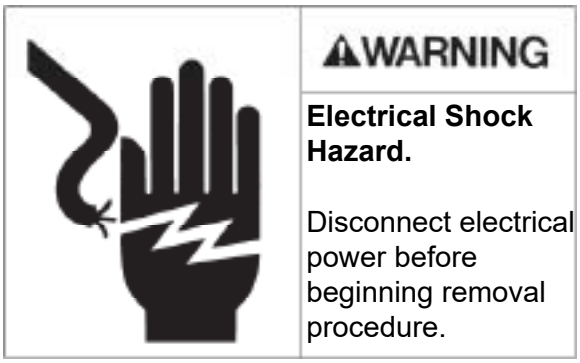

Note: If the compressor is being returned for warranty, braze the stubs shut and tag the compressor with the required information.

Evaporator

Note: Back and Top access is required for this procedure

1. Remove top panel.
2. Remove access cover on back panel
3. If the machine was in operation, push and release the Harvest button to warm up the evaporator.
4. Disconnect electrical power.
5. Remove harvest assist solenoid
6. Recover refrigerant.
7. Remove curtain
8. Remove water distributor
9. Release ice thickness sensor
10. Remove water distributor bracket from the top of the evaporator
11. Connect nitrogen bottle to discharge access port. Open both access valves.
12. Open nitrogen valve
13. Unsweat the inlet and outlet refrigerant tubes. Use caution when heating the tubing, do not damage the freezing compartment walls.
14. Shut nitrogen valve.
15. Remove mounting screws holding the evaporator to the wall. Note: fastener size is 5/16” hex.
16. Remove the evaporator from the ice machine.
17. Attach new evaporator to freezing compartment wall, but do not secure tightly at this time.
18. Install the harvest assist solenoid. Note location of ejector pin. Adjust position of the evaporator slightly to center the pin in the guide hole of the evaporator. When centered, tighten all evaporator fasteners.
19. Open nitrogen valve
20. Reconnect inlet and outlet tubes by brazing the copper tubes together.
21. Replace filter drier.
22. Shut access valves, remove nitrogen bottle.
23. Evacuate to at least 300 microns.
24. Weigh in the nameplate charge. Check for leaks.
25. Return ice thickness sensor bracket, ice thickness sensor, water distributor, curtain and evaporator cover to their original positions.
26. Reconnect electrical power.
27. Return all panels to their original positions.

⚠WARNING

Electrical Shock Hazard.

Disconnect electrical power before beginning removal procedure.

Only qualified technicians familiar with R290 refrigerant should decommission a machine, as special tools and containers are required for the removal, transportation, and disposal of this highly flammable substance.

- Before attempting the procedure:
  - Ensure that all protective gear is present and used throughout the procedure.
  - Make sure recovery equipment and containers are available and ready for use. All containers used for recovery must be rated for R290 refrigerant and must be labeled as such.
  - Weigh any refrigerant prior to reclaiming.
- Maintain safety through standard operating procedures as outlined on page 20 of this document. Be sure to follow local, state, and federal guidelines for proper disposal.
- Do not fill containers more than 80% and do not exceed the pressure limits of the container. Make sure the machine to be decommissioned is in satisfactory working order and that the electrical components of the machine are properly sealed to prevent ignition.
- Recovered refrigerant should not be charged into another refrigerating system or mixed in another container.
- Make sure to safely transport the refrigerant in line with standard operating procedures.
- All recovered refrigerant must be returned to refrigerant supplier for proper disposal.
- If compressor or compressor oils are removed ensure it has been removed to an acceptable level so the flammable refrigerant does not remain in the lubricant.