capkold®

ELECTRIC SOUS VIDE

COOKER/CHILLER MODELS CKHPCC

The Cooker/Chiller is designed to cook up to 400 pounds or up to 600 pounds of vacuum packaged product utilizing removable cooking baskets or liquid filled bags and chills these amounts from 180ºF to 35ºF in approximately 60 minutes to 6 hours depending on the product. For chilling, this specially designed unit circulates 35 degree water from below the casings in a turbulent motion which effectively chills soups, sauces and other products typically cooked in kettles. In addition, the unit operates as an automatic cook tank which cooks then chills meats, vegetables, rice and other products packaged in casings. It is also perfect for defrosting any foods packaged in casings. The unit requires a remote mounted 8hp, 15hp or 30hp refrigeration system which is sold separately.

Certifications: NSF

PROJECT NAME:	
LOCATION:	
ITEM NO:	
QTY:	
MODEL NO:	
AIA NO:	
SIS NO:	
CSI SECTION:	11400

AVAILABLE MODELS:

- ☐ CKHPCC-75 PRODUCT COOKER/CHILLER (75 GAL.)
- ☐ CKHPCC-100 PRODUCT COOKER/CHILLER (100 GAL.)

STANDARD FEATURES:

- User friendly touch screen control allows automatic cooking and chilling in either a timed mode or probe mode
- Accurate temperature control in the cooking mode
- Automatic temperature control in the chilling mode
- Automatic water fill, cold and/or hot depending on mode selected
- Type 304 stainless steel construction with 2” radius corners for easy cleaning and improved water flow
- Stainless steel product hold-down grid and latch included
- Stainless steel refrigeration coil built into tank with expansion control valve that is adaptable to glycol
- Adjustable bullet feet
- Internal components and water delivery pipes are easily removable for cleaning
- 3 hp motor, stainless steel pump and 304 stainless steel distribution piping circulate water evenly throughout the tank
- Overflow connection
- Stainless steel NEMA 4 control enclosure
- External stainless steel electric heat exchanger for use in the cooking mode
- Unit automatically drains between cooking and chilling cycles
- Automatic hot and cold water fill solenoids
- 2” insulation on bottom and sides to reduce condensation and conserve energy
- Time/temperature recorder capable of saving data from each product batch and connecting directly to a network
- The side mounted electrical component box is removable for wall mounting or back mounting.

INSTALLATION:

Contact CapKold® for any refrigeration piping run over 100 feet or installation at any elevation higher than 10 feet above the chiller. Professional consultant and/or mechanical contractor must determine suitability of installation site and provide for all necessary site preparations.

Refrigerant piping and electrical control wiring between the tank and Refrigeration Package must be installed by a licensed refrigeration contractor in accordance with all applicable plumbing and electrical codes, good practice and the detailed installation instructions provided with both system components.

OPTIONS/ACCESSORIES:

- ☐ Remote Mounted Air Cooled Condensing Unit
- ☐ Remote Mounted Water Cooled Condensing Unit
- ☐ Drain tempering valve

ADDITIONAL RESOURCES:

Request A Quote

Sales Tools

Find A Rep

CONDENSING UNIT
LCH0080M-ACD
WEIGHT: 1,020 LBS
DIMENSIONS: 64" X 37" X 40" H
CAPACITY: 87,440 BTU/HR @ 25°FSST @ 95°F AMBIENT ON R448A
REFRIGERANT SUCTION CONNECTION: 1 3/8" O.D.F.
REFRIGERANT LIQUID CONNECTION: 5/8" O.D.F.

ELECTRICAL REQUIREMENTS FOR CONDENSING UNIT
BASED ON MFG. RECOMMENDED
3/60/208-230V 52 MCA
3/60/208-230V 80 MOP

OR

3/60/460V 27 MCA
3/60/460V 40 MOP

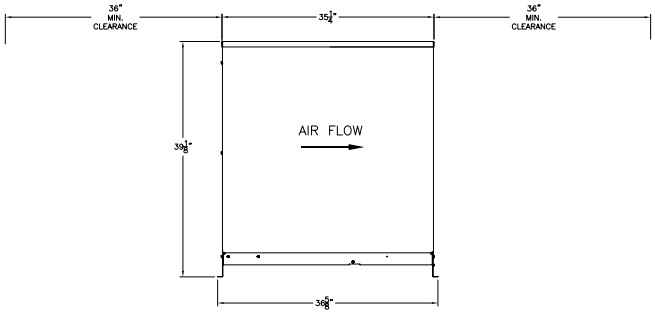

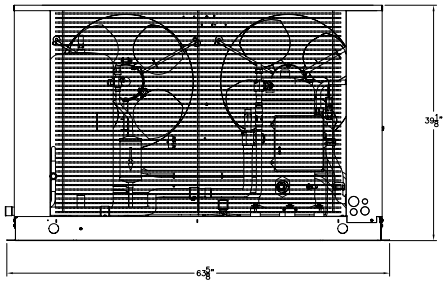

CONDENSING UNIT FOR CKHPCC-75

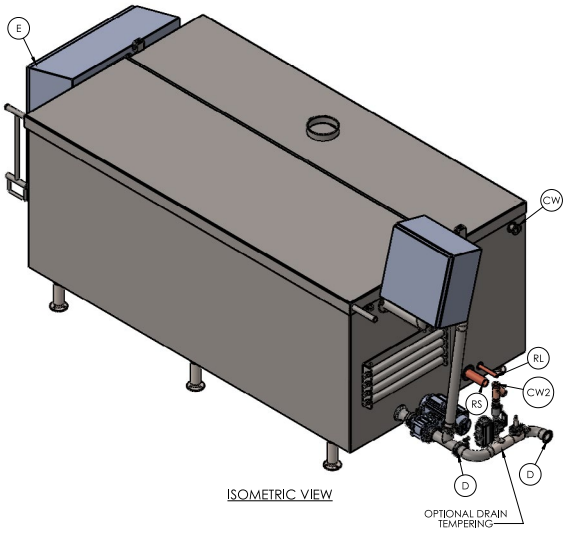

ISOMETRIC VIEW

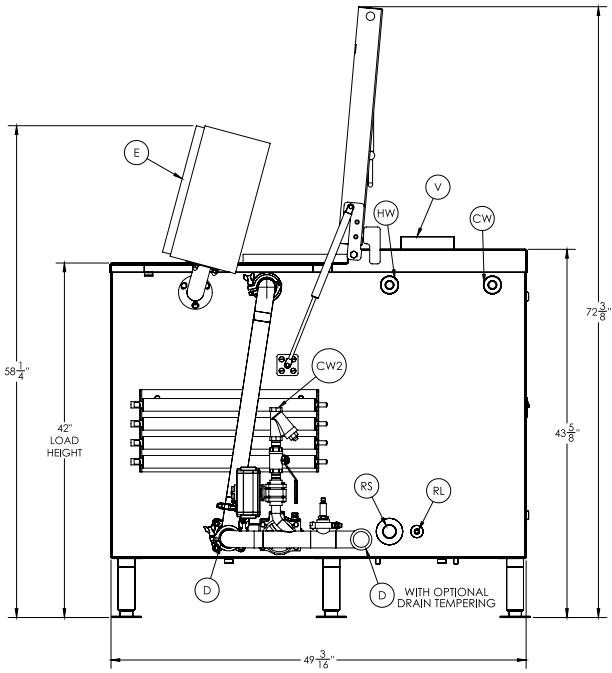

SIDE VIEW

- (CW) COLD POTABLE WATER: 1" T-C, 150 GAL CAPACITY
- (HW) HOT POTABLE WATER: 1" T-C, 150 GAL CAPACITY @ 125°F
- (D) DRAIN: 2" T-C, 75 GPM
- (V) EXHAUST VENT: 6" I.D. 200CFM
- (CA) COMPRESSED AIR: 1/4"NPT, 5CFM REQ'D @ 90PSI
- (P) PUMP: 5 HP, 3 PHASE, 3450 RPM
- (RL) REFRIGERANT LIQUID LINE: 5/8" ODF
- (RS) REFRIGERANT SUCTION LINE: 1 5/8" ODF, 74,000 BTU/HR @ +25° FSST, @ 95°F AMBIENT
- (CW2) COLD POTABLE WATER: 3/4" NPT, OPTIONAL DRAIN TEMPERING
- (E) ELECTRICAL:

WITH ELECTRIC HEAT
3PH, 60CYC, 208V, 155 FULL LOAD AMPS
3PH, 60CYC, 230V, 143 FULL LOAD AMPS
3PH, 60CYC, 480V, 69 FULL LOAD AMPS
3PH, 60CYC, 575V, 58 FULL LOAD AMPS

WITH STEAM HEAT
3PH, 60CYC, 208V, 30 FULL LOAD AMPS
3PH, 60CYC, 230V, 30 FULL LOAD AMPS
3PH, 60CYC, 480V, 15 FULL LOAD AMPS
3PH, 60CYC, 575V, 12 FULL LOAD AMPS

CONNECTION PER LOCAL CODES (CUSTOMER TO SPECIFY REQUIREMENTS)

© 2026 Electrolux Professional, Inc. All Rights Reserved.
Information known to be correct at time of creation. Please reference our website for the most updated product information and specifications.

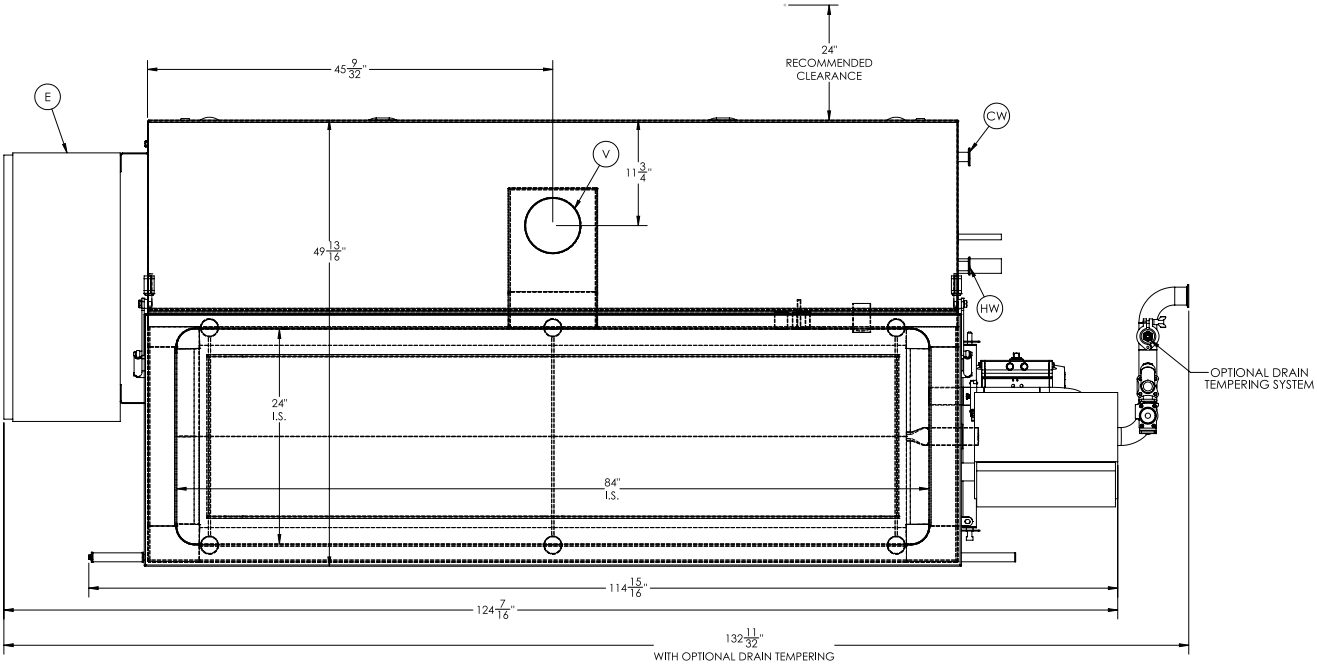

PLAN VIEW

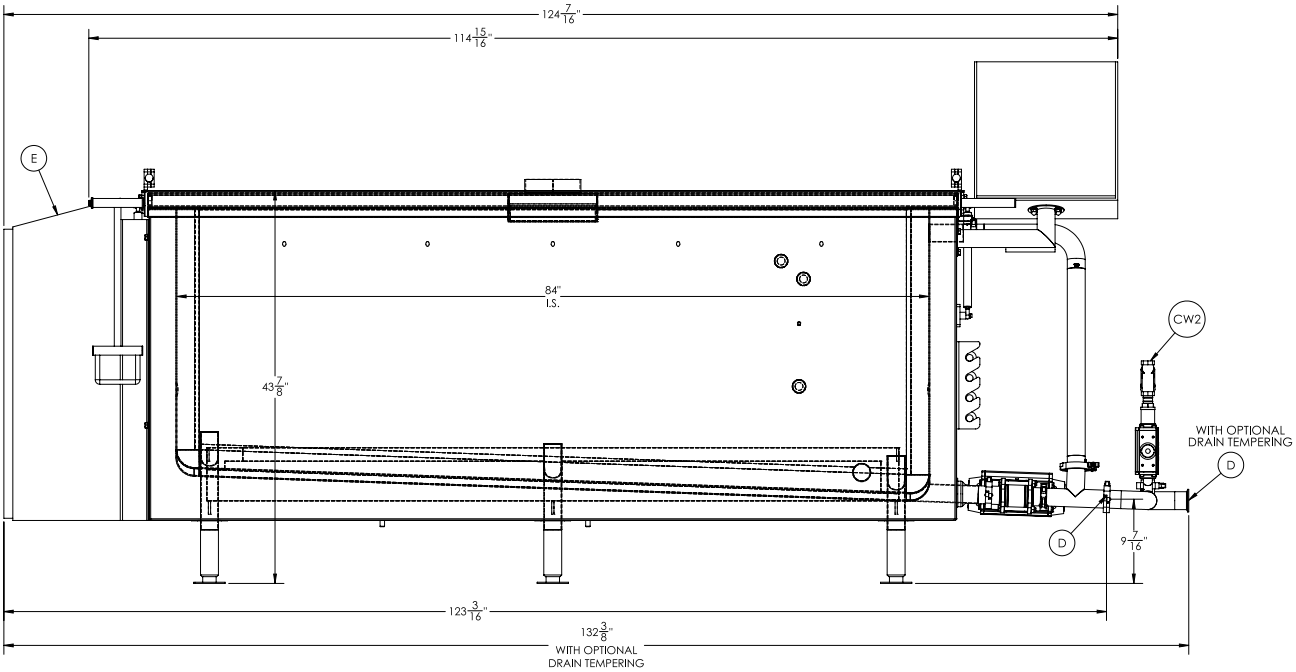

FRONT VIEW

© 2026 Electrolux Professional, Inc. All Rights Reserved.
Information known to be correct at time of creation. Please reference our website for the most updated product information and specifications.

CONDENSING UNIT
LCV0150M-ACD
WEIGHT: 1,910 LBS
DIMENSIONS: 171" X 49" X 54" H
CAPACITY: 148,490 BTU/HR @ 25°FSST @ 95°F AMBIENT ON R448A
REFRIG. SUCTION CONN.: 1 5/8" O.D.F.
REFRIG. LIQUID CONN.: 1 1/8" O.D.F.

ELECTRICAL REQUIREMENTS FOR CONDENSING UNIT
BASED ON MFG. RECOMMENDED
3/60/460V 36 MCA
3/60/460V 60 MOP

OR

3/60/208-230V 74 MCA
3/60/208-230V 125 MOP

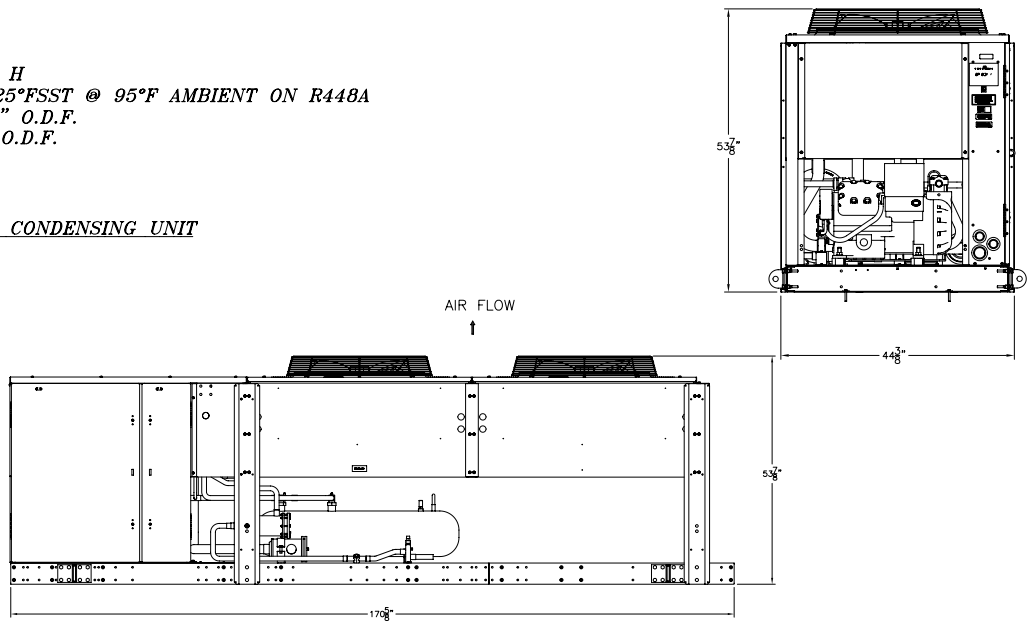

CONDENSING UNIT FOR CKHPCC-100

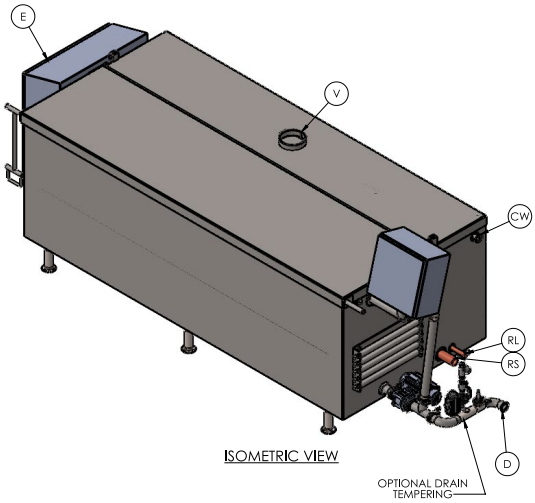

ISOMETRIC VIEW

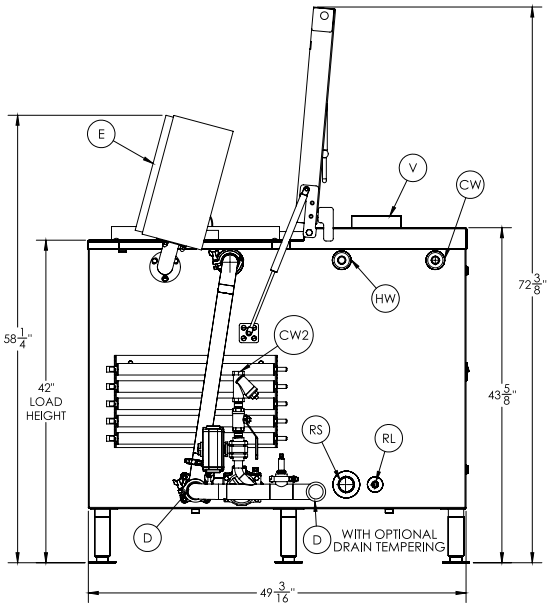

SIDE VIEW

(CW) COLD POTABLE WATER: 1" T-C, 155 GAL CAPACITY

(HW) HOT POTABLE WATER: 1" T-C, 155 GAL CAPACITY @ 125°F

(D) DRAIN: 2" T-C, 75 GPM

(V) EXHAUST VENT: 6" I.D., 200 CFM

(CA) COMPRESSED AIR: 1/4" NPT, 5 CFM REQ'D @ 90PSI

(P) PUMP: 5 HP, 3 PHASE, 3450 RPM

(RL) REFRIGERANT LIQUID LINE: 7/8" ODF

(RS) REFRIGERANT SUCTION LINE: 2 1/8" ODF, 140,000 BTU/HR @+25° FSST, @ 95°F AMBIENT

(E) ELECTRICAL: 3PH, 60CYC, 208V, 230 FULL LOAD AMPS
3PH, 60CYC, 230V, 211 FULL LOAD AMPS
3PH, 60CYC, 480V, 102 FULL LOADAMPS
3PH, 60CYC, 575V, 85 FULL LOAD AMPS

CONNECTION PER LOCAL CODES
(CUSTOMER TO SPECIFY REQUIREMENTS)

(CW2) COLD POTABLE WATER: 3/4" NPT, OPTIONAL, DRAIN TEMPERING

© 2026 Electrolux Professional, Inc. All Rights Reserved.
Information known to be correct at time of creation. Please reference our website for the most updated product information and specifications.

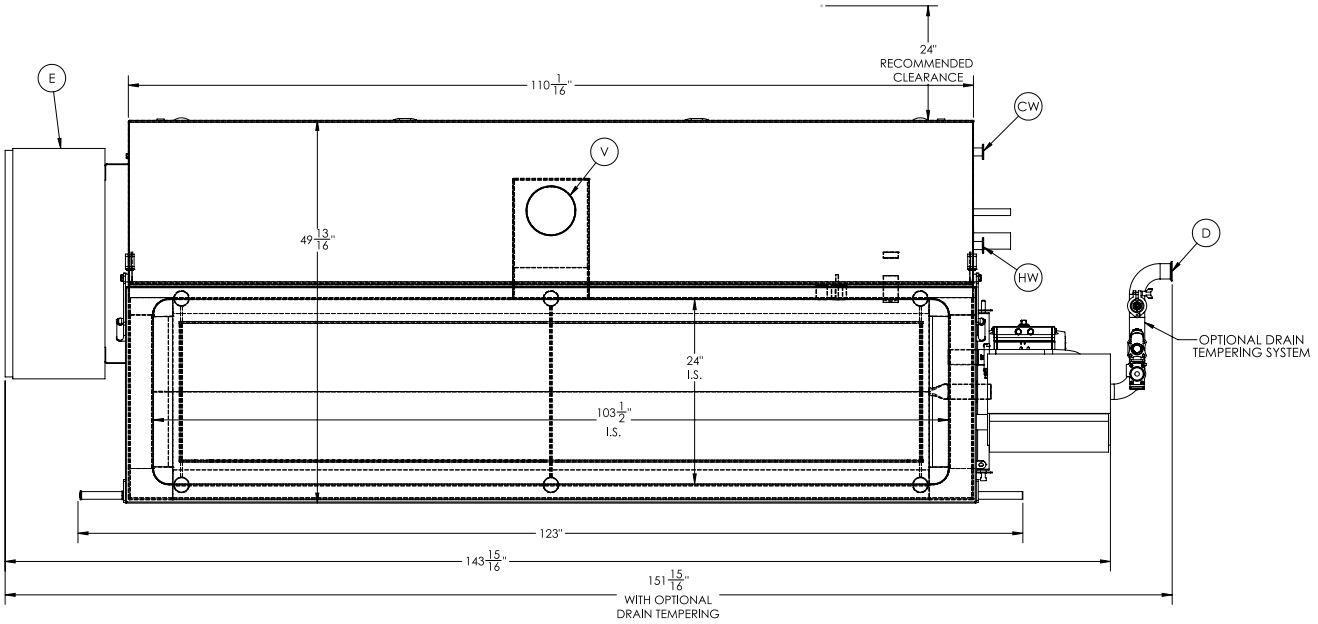

PLAN VIEW

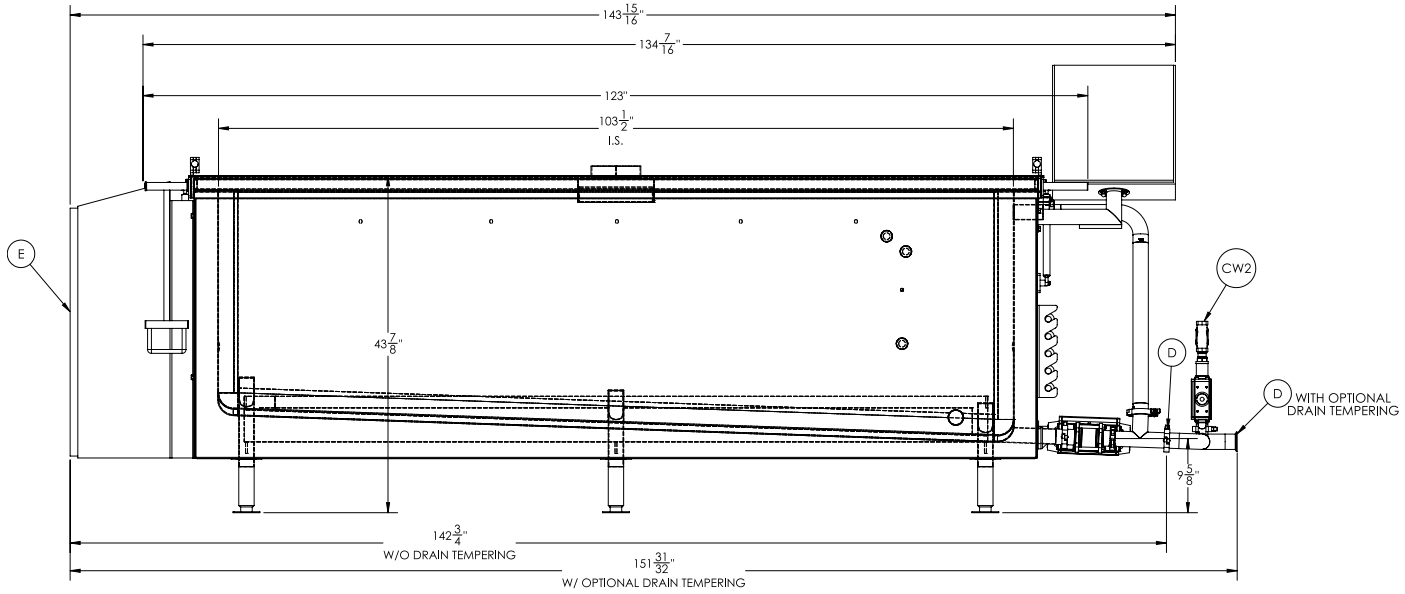

FRONT VIEW

© 2026 Electrolux Professional, Inc. All Rights Reserved.
Information known to be correct at time of creation. Please reference our website for the most updated product information and specifications.