2-Solid Door Back Bar Refrigerator Black 61" Long

738270 (KCHBB60S)
2-Solid Door Back Bar Refrigerator Black 61" Long

Description

2-door Back bar refrigerator. Exterior back and bottom panels in galvanized steel, top panel in 304 stainless steel and exterior side panels in painted steel; interior back, side, and top panels in 430 stainless steel, interior bottom panel and worktop in 304 stainless steel. Fin & tube condenser to improve the performances in high temperature environments. Automatic Defrost Cooling System and temperature control. Heavy duty adjustable shelves and self-closing doors with 90-degree stay-open feature.

R290 gas in refrigeration circuit.
ETL Safety and Sanitation certified.
3/5 Years warranty.

Main Features

- External digital temperature display.
- Internal LED lighting enhances visibility for quick and easy product identification, and minimal energy use.
- Fin & Tube Condenser improves performance in high temperature environments.
- Automatic Defrost Cooling System provides worry-free performance.
- Locking doors protect the contents of the unit
- Heavy duty Vinyl coated steel shelves.
- Adjustable shelves for flexible storage
- Cabinet completely insulated with high density polyurethane for low environmental impact.
- Shallow depth body, for narrow footprint
- Removable rubber bumper guards for airflow spacing and shock absorption
- Side-mounted refrigeration system improves airflow, reduces heat buildup behind the unit, and allows easy service access
- Durable plastic protective cover screen safeguards front-facing digital temp controller
- Cabinet capable of accepting 378 standard 12-ounce long-neck bottles
- Cabinet capable of accepting 672 standard 12-ounce beverage cans

The company reserves the right to make modifications to the products without prior notice. All information correct at time of printing.
a. Kelvinator Commercial is a pending or registered trademark of Electrolux Consumer Products, Inc., and is used under a license from Electrolux Consumer Products, Inc.
https://www.kelvinatorcommercial.com

Construction

- Painted black steel exterior, for durable and sleek modern finish
- Lockable door.
- Self-closing door with 90-degree stay-open feature.
- Stainless steel interior, durable and easy to clean for daily commercial use
- Pre-wired heavy duty power cord.
- Heavy duty door hinges.
- Magnetic gasket removable without tools for easy cleaning.
- Stainless steel worktop, durable functionality
- Caster-ready base allows installation of heavy-duty casters for durable support and easy repositioning.
- Front and rear ventilation panel design improves airflow for effective heat release from the refrigeration system.

Sustainability

- CFC and HCFC free, highly ecological refrigerant type: R290 (ecological gas in foam: cyclopentane). Hydrocarbon refrigerant gas R290 for the lowest environmental impact (GWP=3), to reduce green house and ozone depletion effects.
- Hydrocarbon refrigerant gas R290 for the lowest environmental impact (GWP=3) - CFC and HCFC free.
- High efficiency components to minimize the energy consumption still guaranteeing the highest performances.
- Interior LED light to save energy and for best internal visibility.
- 40 mm insulation for energy saving

Optional Accessories

PNC Code	Description
Containers, Trays and Grids	
880609	Two Shelves for 60" Back Bar (1 Right & 1 Left)
880611	Shelf clips (4-pack)
Feet, Wheels and Ramps	
880743	4" Caster
880744	4" Locking Caster
880745	2.5" Caster
880746	2.5" Locking Caster

The company reserves the right to make modifications to the products without prior notice. All information correct at time of printing.
a. Kelvinator Commercial is a pending or registered trademark of Electrolux Consumer Products, Inc., and is used under a license from Electrolux Consumer Products, Inc.
https://www.kelvinatorcommercial.com

Technical specifications

Electric	
Supply voltage:	115 V/1 ph/60 Hz
Plug type:	USA NEMA 5-15P
Current consumption:	3 Amps
Compressor power:	1/5 hp
Power Cable Length:	2500 mm
Capacity:	
Gross capacity:	16.6001 cu.feet
Key Information:	
Number and type of grids (included):	4 (595x476)
Door hinges:	1 Left+1 Right
External dimensions, Width:	61 1/16" (1551 mm)
External dimensions, Depth:	24 7/16" (620 mm)
External dimensions, height:	36 1/4" (920 mm)
Number and type of doors:	2 Full
Internal Dimensions (depth):	20 " (508 mm)
Internal Dimensions (height):	28 " (711.2 mm)
Internal Dimensions (width):	47 1/2" (1206.5 mm)
Net weight:	238 lbs (108 kg)
Shipping width:	62 5/8" (1591 mm)
Shipping depth:	26 3/4" (680 mm)
Shipping height:	41 5/16" (1050 mm)
Shipping weight:	295 lbs (134 kg)
Type of external material:	Black Prepainted Steel
Type of internal material:	Stainless Steel
Refrigeration Data	
Operating temperature min.:	32 °F (0 ° C)
Operating temperature max.:	41 °F (5° C)
Defrost type:	Auto Defrost
Evaporator type	Finned
Refrigerant unit side:	Left
Sustainability	
Refrigerant type:	R290
Refrigerant weight:	110 g

Front

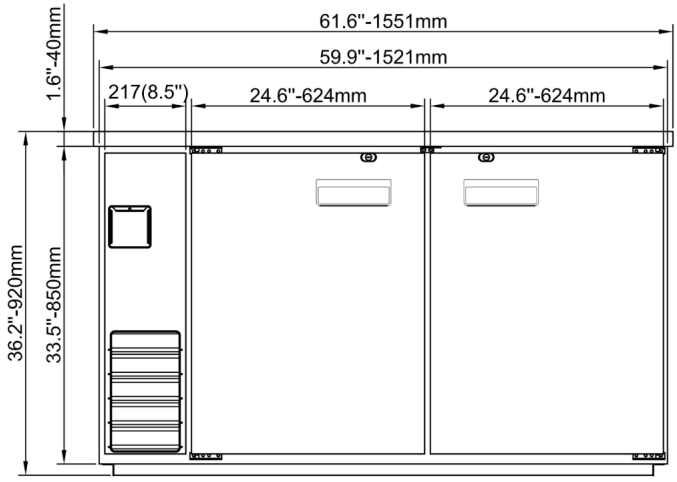

Side

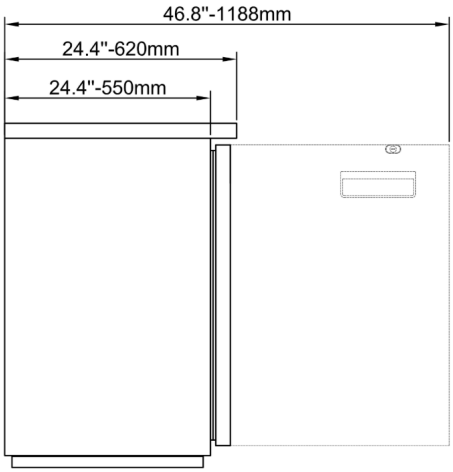

EI = Electrical inlet (power)
RO = Refrigerant Outlet
RI = Refrigerant Inlet