Ice-O-Matic

PROJECT: _____

ITEM # _____ QTY: _____

MODEL # _____

AIA # _____ SIS # _____

CUBE ICE MAKER

CUBE ICE MAKER

CIM0835HA90

Features and Benefits

- Uses R290 for a more environmentally friendly and efficient refrigerant.
- Modular design and dual exhaust for flexible application and easy installation on bins or dispensers.
- Easy to clean with front facing evaporator and dishwasher safe (up to 180°F) components.
- Easy and quick cleaning reduces operating costs.
- Simple service with many common parts across all CIM machines.
- Harvest Assist provides consistent ice production for the life of the ice maker while reducing energy consumption and increasing capacity.
- Durable, electroless nickel plating on all evaporator plates ensures reliability.
- Constructed from corrosion-resistant and fingerprint-proof aluminum.

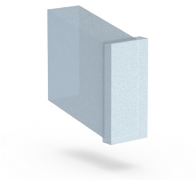

ICE FORMS	
HALF CUBE	3/8 x 7/8 x 7/8 in.
	10 x 22 x 22 mm

BIN CHART

Model #	B40	B42	B55	B110	B700-30	B1000-48	B1300-48	B1325-60	B1660-60
capacity width	344 lbs (156 kg) 30 in (762 mm)	351 lbs (160 kg) 22 in (559 mm)	510 lbs (232 kg) 30 in (762 mm)	854 lbs (388 kg) 48 in (1,219 mm)	680 lbs (308 kg) 30 in (762 mm)	1,000 lbs (454 kg) 48 in (1,219 mm)	1,320 lbs (599 kg) 48 in (1,219 mm)	1,325 lbs (601 kg) 60 in (1,524 mm)	1,660 lbs (753 kg) 60 in (1524 mm)
Kit for combining wider bins with smaller models	Kit Not Required	Not Compatible	Kit Not Required	BPF-1	Kit Not Required	Kit Not Required	Kit Not Required	Kit Not Required	Kit Not Required

See Ice-O-Matic Price List for Adapter Kits to combine ice makers with most available ice/beverage dispensers.

CIM0835HA90 shown atop of bin B55 (sold separately)

Warranty

- Ice Maker: **3 years parts and labor**
- Evaporator and Compressor: **5 years parts**

Options & Accessories

- KSI-1 - Safe Ice Module
- KCUBEDISPB for mounting to a dispenser
- B55

Water Filter

- Manifold System IFQ1-M gets replacement filter IOMQ-M

11100 E. 45th Avenue • Denver, CO 80239
Phone: 1.866.PURE.ICE
www.iceomatic.com

Specifications are subject to change without prior notice.

Rev. 07/2026 Printed in U.S.A.

APPROVAL: _____ DATE: _____

Ice-O-Matic CUBE ICE MAKER

CIM0835HA90

Line drawing note: Numbers with quote symbol " are in inches. Numbers enclosed in [brackets] are in millimeters.

PLAN / TOP VIEW

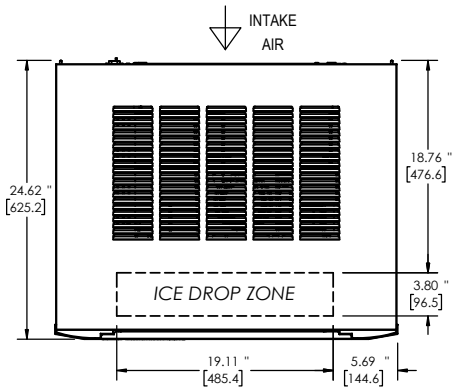

ELEVATION / FRONT VIEW

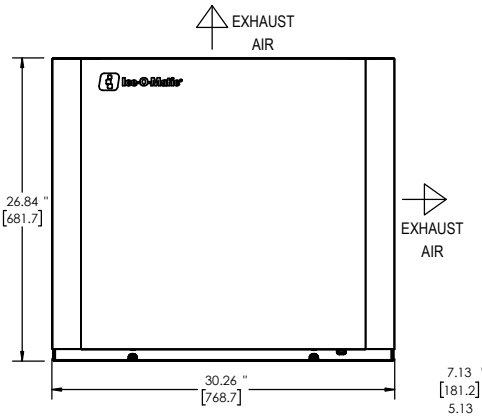

UTILITIES / BACK VIEW

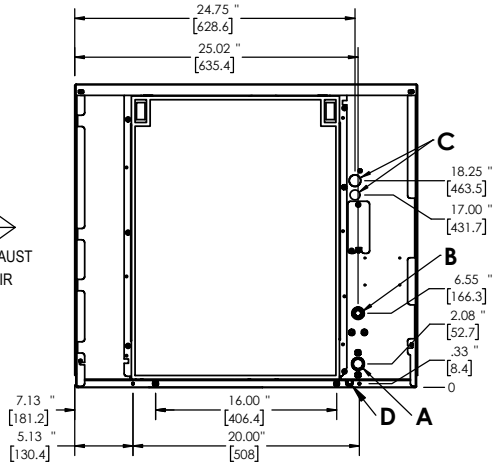

Air Cooled

A. Ice Maker Drain, 3/4" FPT
B. Ice Maker Potable Water Inlet, 3/8" FPT
C. Electrical Connection, ∅.875" [22.2] (2)
D. Condensate Base Drain, ∅.50" [12.7]

SPECIFICATIONS

Model	CIM0835HA90
Condensing Type	Air
Voltage/Hertz/Phase	220-240/50/1
Min. Circuit Amp	9.9
Max Breaker Size	16 A
kWH per 100 lbs of ice at 70ºF air / 50ºF water	3.36
kWH per 100 lbs of ice at 90ºF air / 70ºF water	4.59
BTU (approx per hour)	14600
Number of Wires	3 (including ground)
Refrigerant	R290
Refrigeration Charge	6.7 oz / 189.9 g

Ice Production per 24 hrs	
70º air / 50º water lbs (kg)	90º air / 70º water lbs (kg)
848 (385)	692 (314)

Water Usage gallons per 100 lbs of ice 90ºF air / 70ºF water	
Potable	Condenser
17	N/A

OPERATING REQUIREMENTS

	MINIMUM	MAXIMUM
Ambient Temp. Range Air	50°F (10°C)	110°F (43°C)
Water Temp	40°F (4°C)	100°F (38°C)
Water Pressure	20 PSIG (1.4 BAR)	80 PSIG (5.5 BAR)

DIMENSIONS

Unit Width	30.26	769
Unit Depth	24.62	625
Unit Height	26.84	682

Shipping Weight	214 lbs / 97 kg
Shipping Dimensions (in.)	33 (W) x 27 (D) x 33 (H)
Shipping Dimensions (mm)	838 (W) x 686 (D) x 838 (H)

We reserve the right to change specifications and product design without notice. Such revisions do not entitle the buyer to corresponding changes, improvements, additions or replacements for previously purchased equipment.

Rev. 09/2026 Printed in U.S.A.

11100 E. 45th Avenue • Denver, CO 80239 • Phone: 1.866.PURE.ICE • www.iceomatic.com

WELBILT
an Ali Group Company