Project name:	
Location:	
Item:	Qty:
Model:	

EV18

HIGH-TEMP UNDERCOUNTER DISHWASHER

SINGLE SKIN STAMPED

REINFORCED DOOR HINGES

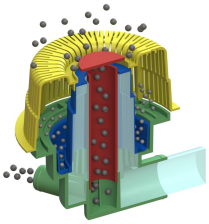

dFILTER ® SYSTEM

SIMPLE CONTROL PANEL WITH DIGITAL DISPLAY

Intertek

Intertek

CONSTRUCTION FEATURES

- Body, external housing, wash tank, and all chassis components in brushed stainless steel 304 18/10
- Upper and lower wash and rinse revolving arms constructed of reinforced fiberglass; easy to remove and clean without the need for tools
- Integrated AISI 18/10 stainless steel booster with insulated lining
- Safety micro-switch on the door to interrupt wash pump action
- Independently-operated heating elements alternating between booster and wash tank
- Alternating heating elements reducing maximum absorption thereby reducing energy costs
- Automatic fill and water level regulation of the wash tank
- Wash pump protected with filter plus additional shield for tank element
- New dFilter system ®
- Door-opening with overall clearance of 13.4" (340 mm)
- Slide out integrated front control panel provides easy access for service
- Electronic Temperature gauges displaying wash and rinse temperatures
- Thermostatic control of wash and rinse temperatures ensure optimum results
- Unit equipped with: automatic drain pump, automatic peristaltic pumps for both liquid detergent and rinse additive
- Standard equipment includes: One open combination rack and one peg dish rack 19.75" x 19.75" (500 mm x 500 mm)

TECHNICAL FEATURES

- **Rack capacity:** 19.75" x 19.75" (500 mm x 500 mm)
- **Complete operating cycle:** Two programmable cycles (1-3 Min)
- **Wash tank capacity:** 7.25 U.S. gallons (5.50 U.S. Ltl)
- **Wash tank element:** 2800 watts
- **Wash temperature:** 150°F (65°C)
- **Booster capacity:** 2.20 U.S. gallons (8 litres)
- **Booster element:** 4000 watts
- **Booster (water) temperature:** 185°F - 194°F (85°C - 90°C)
- **Power supply:** 208-240/60/1
- **Amperage:** 22.3 amps
- **Maximum power rating:** 4550 watts
- **Water consumption:** 0.79 U.S. gallons per cycle (3 litres)
- **Water consumption per hour:** 25.9 U.S. gallons (98 litres max.)
- **Water supply:** 1/2" hot water supply 140°F / 60°C
- **Recommended pressure:** 25 p.s.i. (dynamic) (PRV may be required)
- **Water inlet connection:** 3/4" male hose connector (hose included)
- **Drain connection:** 1" ID (25.4mm) max height 36" (915mm) (hose included)
- **Shipping weight:** 165 lbs (75 kg)

OPTIONAL ACCESSORIES

- Pressure reducing valve (PRV) kit
- Stainless steel stand (12" high)
- Drain water tempering kit

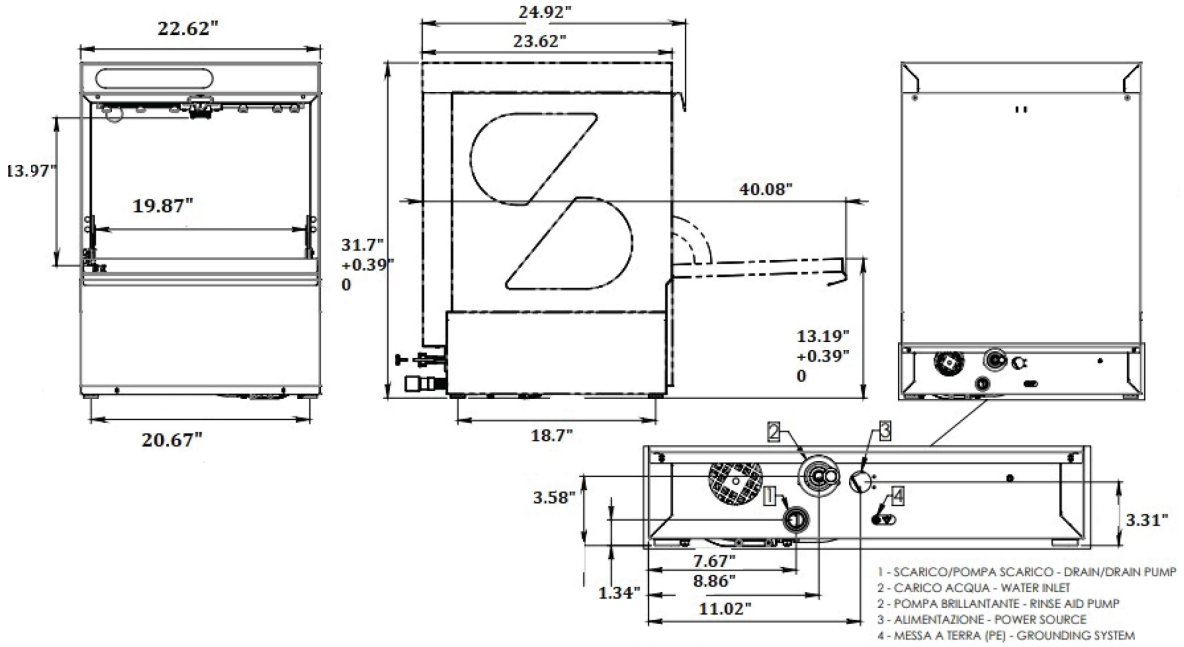

JET-TECH is a registered trade mark of MVP Group.
Specifications subject to change without notice.

3560 NW 56th Street
Fort Lauderdale, FL, United States 33309
Telephone: 786.600.4687 / Toll Free: 844.218.8477
Fax: 786.661.4100

5659 Royalmount Ave.
Montreal, QC, Canada H4P 2P9
Telephone: 514.737.9701 / Toll Free: 888.275.4538
Fax: 514.342.3854 / Toll Free: 877.453.8832
sales@mvpgroupcorp.com / mvpgroupcorp.com