EmberGlo®

Kabob Gas Char Broiler
Models 25 Kabob & 25W Kabob
31 Kabob

Kabob Char Broilers - Shish Kabobs have always been a popular dish, celebrated by various cultures for centuries. The EmberGlo Kabob Gas Char-Broiler is incredibly versatile in cooking almost anything that can be placed on a skewer. In a short period of time, a large variety of foods can be broiled effortlessly with that distinctive 'Outdoor Taste' !!

Kabob Gas Char Broiler
Model 25WC Kabob

Kabob Gas Char Broiler
Model 25WF Kabob

The grill top on this commercial grade Broiler is designed especially for broiling Shish Kabobs. The quality stainless steel skewers included with the broiler can accommodate large pieces of meat such as beef, chicken, lamb, pork, seafood or veggies. Foods char-broiled on an EmberGlo keep their delicious natural flavors and juices while retaining that great outdoor char-broiled taste.

The EmberGlo Kabob Gas Char-Broilers have all the great benefits and features of the regular EmberGlo Gas Broilers. They can be ordered as a floor or counter top models, they have NO MESSY GREASE TRAYS to clean, they have the industry's only all ceramic hearth, and they can control your flame flare ups with a patented flick of a switch called "Flaretrol". All 25W Kabob broilers have all stainless steel cabinetry.

Once you use an EmberGlo Gas Char-Broiler you will never want anything else but an EmberGlo!

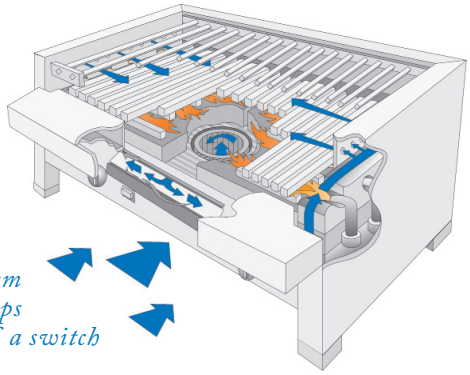

The Flaretrol® system controls flame flare-ups with a simple flip of a switch

EmberGlo
A Div of Midco® International Inc.
4140 West Victoria Street
Chicago, Illinois 60646
toll free 866.705.0514
tel 773.604.8700
fax 773.604.4070
web www.emberglo.com
e-mail sales@emberglo.com

Quality Designed for Proven Performance

822
8475-04
Printed in USA

Kabob Gas Char Broilers

Char Broiling at its Best -
Kabob Models # 25 Kabob, 25W Kabob and 31 Kabob

Kabob Char Broilers Specialized Features

- All Ceramic Broiling Hearth
- Flame Control with our Unique Patented FLARETROL® System
- NO MESSY GREASE trays
- Self Cleaning Hearth
- Single Gas Heat Control Valve
- Optional Cooking Grate
- Zero Recovery Time
- Clog Free, Side Mounted, Inshot 'Cobra' Gas Burner Heads
- 'Outdoor Flavor' - Indoors
- Kabob Broilers Include 10 Stainless Steel Skewers
- Natural or Propane Gas
- All Stainless Steel Construction for the 25W Kabob Broilers

Flame Controlling Flaretrol® System

The Kabob Broiler features the exclusive Flaretrol® system—the most effective means of flame flare-up control for open hearth broiling. When grease starts to flare-up, simply flip the Flaretrol® switch on and a steady stream of air brings the flames under control.

Kabob Char Broilers Models 25, 25W & 31

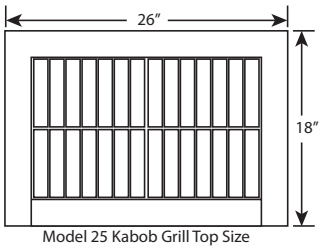

Model 25 Kabob Grill Top Size

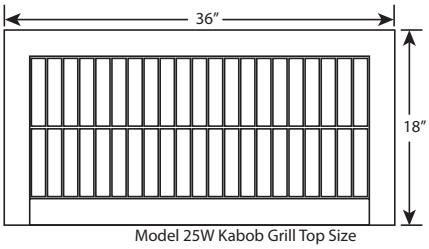

Model 25W Kabob Grill Top Size

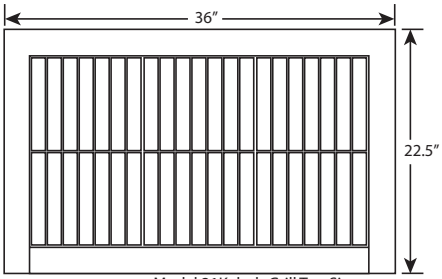

Model 31Kabob Grill Top Size

Kabob Char Broilers Accessories & Options

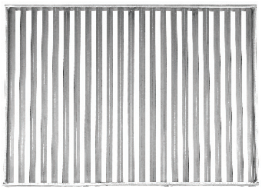

Stainless Steel
Cooking Grill Grates
25W 4638-30
25 (Half) 4638-31

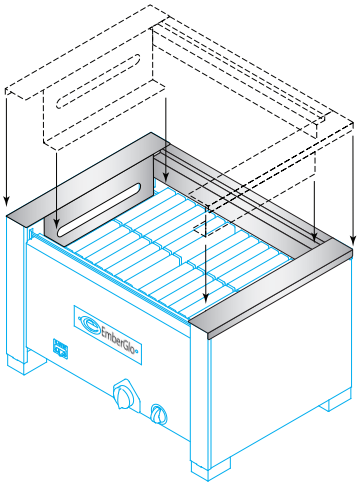

Splash Guards
Stainless Steel
Dishwasher Safe
Set of 2 Sides & 1 Back

Model	Part #
25W	*2060130*
25	*2060140*
31N	*2060150*
31	*2060160*
41	*2060170*

Casters
for floor models
Set of 4
2070100

Broiler Cleaning
Brush
1420-39

Stainless Steel Skewers
To increase prep time efficiency
order extra Sets of 10 Skewers
Models 25 and 25W - 20.5"
4508-68 Set of 10
Model 31 - 24"
4508-69 Set of 10

Specifications - Kabob Broilers

Kabob Model Number	Cabinet Size	Grill Sq. Inch	Grill Size	Flaretrol Amperage	Max Btu/Hr Input	Number of Burners / Btu for Each Burner	Shipping Weight
25C Kabob*	26″w X 18¼″d X 17 9/16″h	333	21 ⅜″w X 15 ⅝″d	120V, 60Hz, 1.5 amp	39,600	6 6,600 Btu/burner	25C - 190 lbs
25F Kabob*	26″w X 18¼″d X 37 to 39″h						25F - 250 lbs
25WC	35⅞″w X 18¼″d X 19½″h	480	30 ¾″w X 15 ⅝″d	120V, 60Hz, 1.5 amp	47,200	2 @ 6,600 Btu/burner 4 @ 8,500 Btu/burner	25WC - 240 lbs
25WF	35⅞″w X 18¼″d X 40″h						25WF - 305 lbs
31C Kabob*	35⅞″w X 22⅝″d X 19½″h	657	30 ¾″w X 21 ⅜″d	120V, 60Hz, 1.5 amp	68,000	8 8,500 Btu/burner	31C - 310 lbs
31F Kabob*	35⅞″w X 22⅝″d X 41″h						31F - 400 lbs

- * Kabob broilers come with a set of skewers, the grill grate is optional and can be purchased separately

- All floor and counter models are identical except for the addition of a floor stand on "F" models
- Specify natural or propane gas when ordering

EmberGlo - *A Division of Midco International* - 4140 West Victoria Street - Chicago, Illinois 60646
toll free: 866 705 0515 - tel: 773.604.8700 - fax: 866.580.8700 - web: www.emberglo.com - e-mail: sales@emberglo.com

822
8475 04
Printed in USA