www.BakeMax.com

BMDD007
Fully Automatic
Dough Divider / Rounder

Questions? OEM Parts?
Contact Us:

Toll Free: 1-800-565-2253
Email: Info@BakeMax.com
www.BakeMax.com

1. GENERAL INFORMATION AND SAFETY SPECIFICATIONS

The dough divider M50 + rounder has been designed and manufactured to cut and round pizza and some types of bread dough portions (at room temperature).
The dough is extruded through an auger, cut by a knife, and then rounded.
This machine must be used ONLY after having carefully read this manual.
The protection covers and doors of the M50 prevent any possibilities of reaching dangerous or moving parts.

2. INDICATION OF DANGEROUS POINTS, OF RESIDUAL RISKS AND OF THE PRECAUTIONS TO BE TAKEN

CAUTION: **Through the dough exit hole you can reach a dangerous part of the machine with your hand, i.e. The knife.**
DO NOT introduce your hand in this hole.

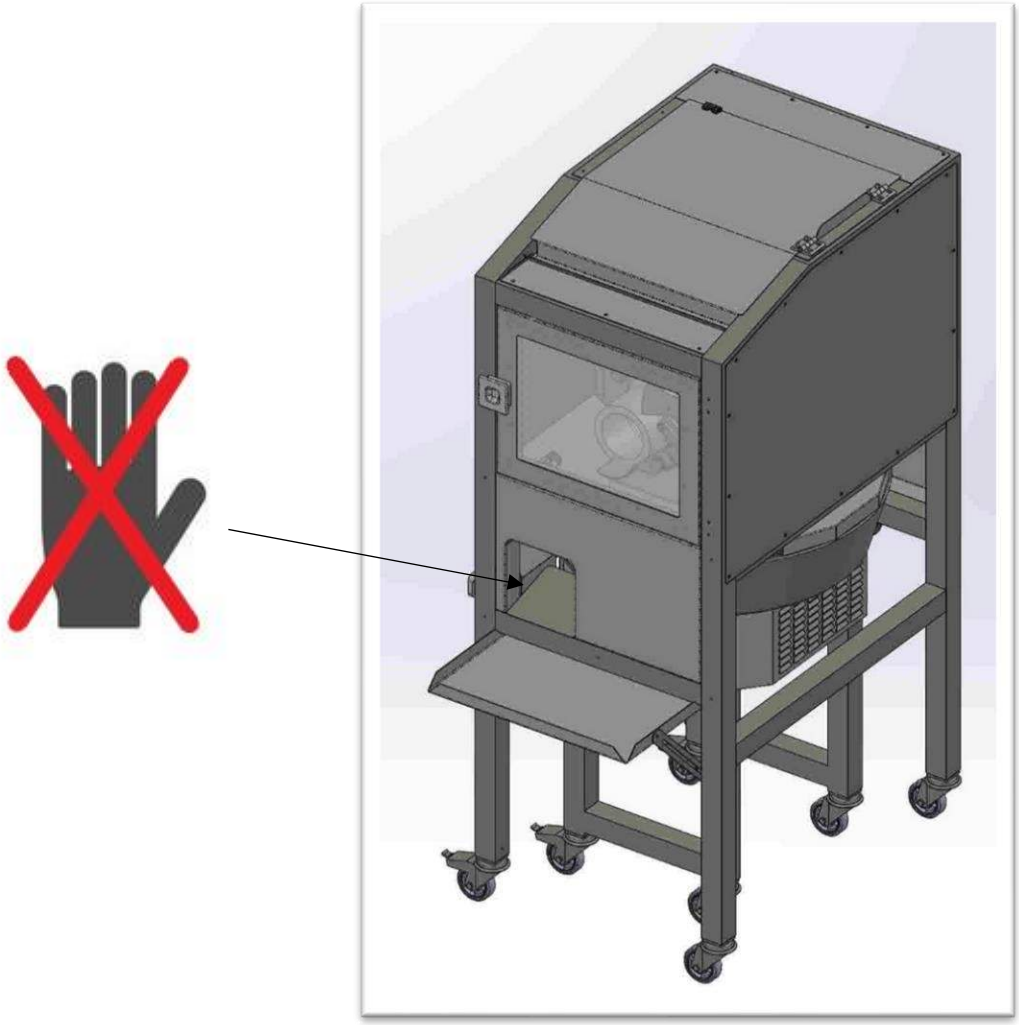

Always place the machine on an even (level) flooring.

To ensure a correct ventilation of the motors which are placed at the back, make sure to leave at least twenty centimeters clearance between the machine and the wall or other equipment.

3. DESCRIPTION OF THE CONTROL DEVICES AND OF THEIR FUNCTION

The machine has a general disconnect (Ref.57), a start button (Ref.52), a stop button (Ref.53), an emergency push button (Ref.51), a speed regulation knob (Ref.54) and a weight regulation knob (Ref.55).

To start the machine, turn the general disconnector to position 1.

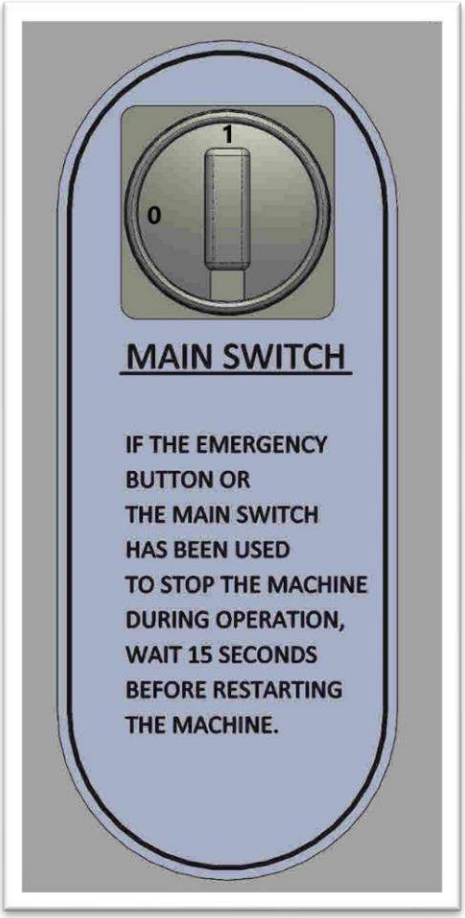

Press on the green start push button (with flashing green light) to operate (with fixed green light). To stop the machine, press on the red “OFF” push button.

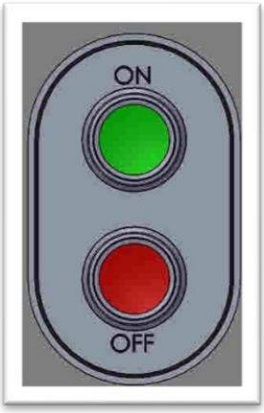

The speed regulation knob (Ref.54) has three positions: “LOW” for the minimum speed; “HIGH” for the maximum one; the “0” position stops the dough divider, and it allows the dough rounder to work alone.

The weight regulation knob (Ref.55) is used to increase or decrease the portions weight but if turned beyond the minimum point (-), it can work as a “reset” device: the knife is brought back to its original position, if displaced.

The emergency push button (Ref.51) must be used **ONLY in case of emergency**. If activated, it must be unblocked turning it clockwise.

Then, turn the general disconnector to positi efore restarting the machine.

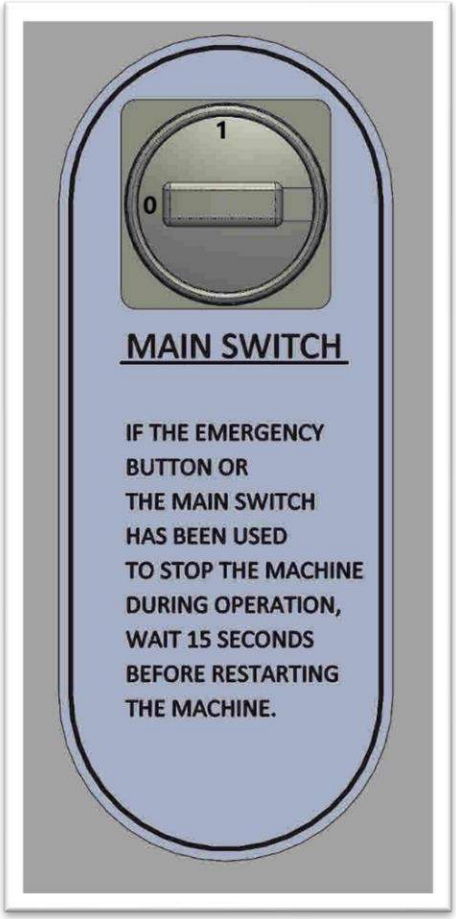

4. FORBIDDEN USES AND REASONABLY FORESEEABLE INCORRECT USES

WARNING: do not introduce into the machine frozen, half frozen dough or other products which are not foreseen in this manual.
Should there be one or more dough balls accumulated on the tray, thus blocking the dough exit hole, do not take them away while the machine is on. Turn off the machine or open the door before proceeding.
DO NOT wash the machine with water jets.

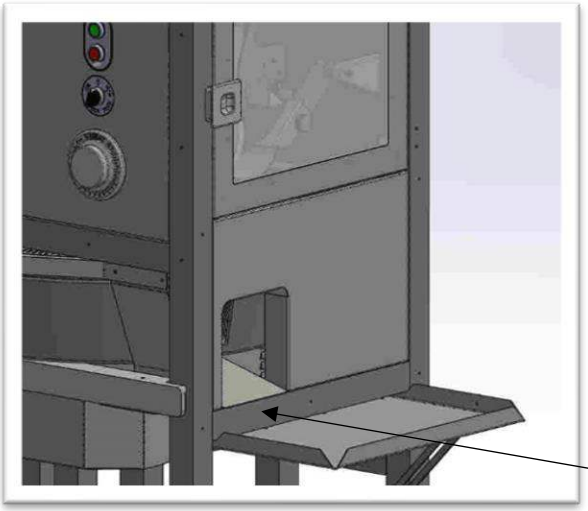

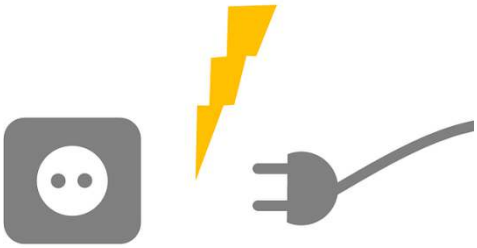

5. TRANSPORT, LIFTING AND INSTALLATION

5.1. The machine is placed on a wooden pallet, fixed onto it with iron angles and plastic band. It is then closed from above with a cardboard box without bottom and strapped to the pallet. Each cardboard box contains a complete machine, its operating and maintenance manual with declaration of conformity.

5.2. To extract the machine out of its packing, you need to cut the straps, to lift the cardboard box up and to cut the plastic bands which block the machine to the pallet.

CAUTION: Two people are necessary to take away the dough rounder (lower part of the machine) from the pallet using the two handles (Ref.28).

These two people can then take away the upper part of the machine (dough divider) from the pallet. They should wear gloves and hold the machine tightly.
Place the dough rounder under the dough divider and plug it into the socket of the divider.

5.3. **BEWARE: To ensure a correct ventilation of the motors which are placed at the back, be sure to leave at least twenty centimeters clearance between the machine and the wall or other equipment.**

Before connecting the machine, plug the dough rounder into the socket (Ref.34) of the divider placed at the back.

CAUTION: the dough rounder must be correctly coupled to the dough divider.

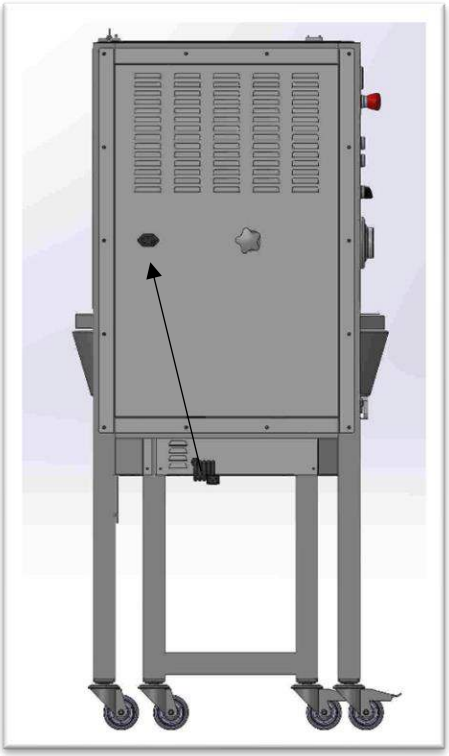

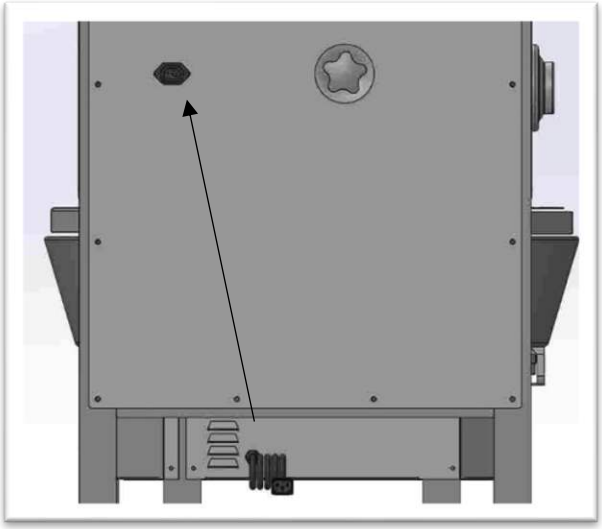

The machine is provided with three motors and a Plug & Go Nema 5-15P

Make sure that the tension and the frequency correspond to those indicated on the machine data plate and that the intake is grounded and properly protected against overloading.

N.B. The protection grade is I.P.55.

The casters with brake of both the divider and rounder (Ref.58 and 23) MUST be blocked.

Place the machine far from any heat sources, the temperature around the machine should never be higher than 55° C.

6. CLEANING AND SANITATION

Before using the machine for the first time, wash all the parts that may encounter food with a sponge, warm water, and non-abrasive liquid detergent.

CAUTION: DO NOT wash the machine with water jets.

7. REGULATION

The best regulation for the BMDD007 is done by steps since it should suit the different types of dough.

7.1. The BMDD007 can prepare dough portions from 450 up to 1100 grams.
For portions weighing from 450 up to 750 grams, use the low speed (LOW - Ref.54).

For portions weighing more than 750 grams, use the high speed (HIGH - Ref.54).

7.2. OPTIONAL CONE

The machine can be supplied with an optional cone (Ref.64), with which portions from 260 up to 500 grams can be prepared.

For portions weighing from 260 up to 360 grams, use the low speed (LOW - Ref.54).

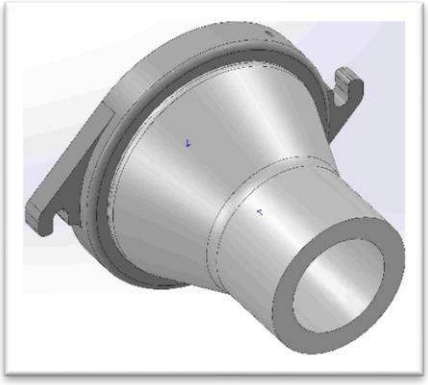

For portions weighing from 360 up to 500 grams, use the high speed (HIGH - Ref.54).

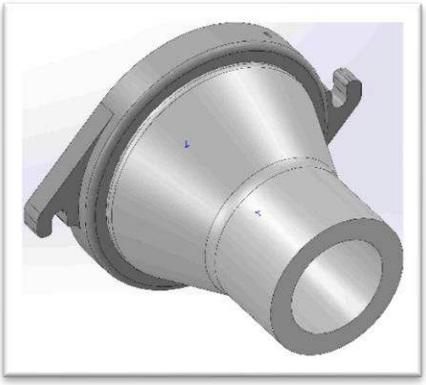

7.3. For more accuracy in the regulation of the weight, use the knob “WEIGHT” (Ref.55).

7.4. After having cut some portions, stop the dough divider turning the speed regulation knob to “0” (Ref.54).

7.5. Weigh the first balls, if they are smaller than foreseen, turn the knob “WEIGHT” towards (+). If they are bigger, turn the knob towards (-).
7.6. Repeat this operation until you get the required weight.

8. USE

8.1. Prepare the dough with a normal spiral mixer.
8.2. The mixing time should be 5 – 10% less than for manual dough portioning and rounding.
8.3. IMMEDIATELY place the dough just prepared into the divider hopper without adding flour or oil.
8.4. Begin at once the cutting and rounding operation of the dough without stopping the machine until the dough hopper is empty. DO NOT leave part of the dough inside of the hopper.
The above suggestions are to prevent the rising process of the dough.
8.5. To start the machine, turn the general disconnector to position 1.

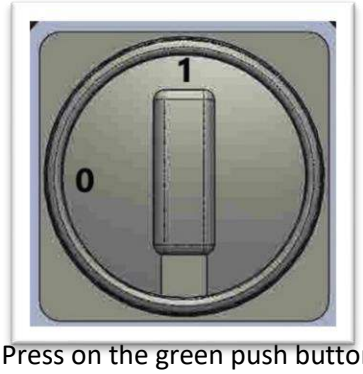

8.6. Press on the green push button (with flashing green light) in order to operate (with fixed green light).

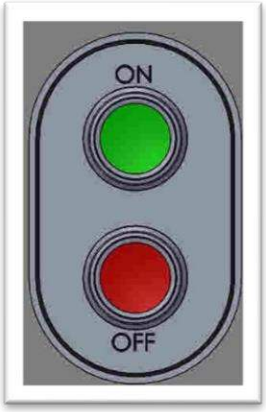

8.7. Take the portions from the tray and place them into their proving drawers.
8.8. Stop the machine pressing on the red push button.

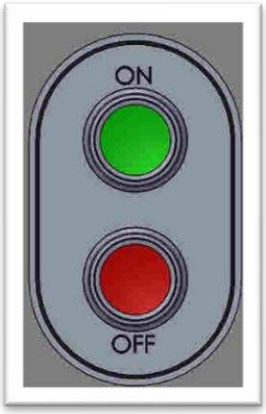

8.9. To disconnect the machine, turn the general disconnector to position 0.

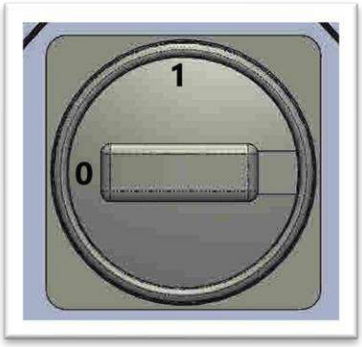

9. DISSASEMBLY AND CLEANING

<u>DOUGH DIVIDER</u>

WARNING: before opening any part of the machine, switch the machine off and pull the plug. Before opening or disassembling any part of the machine, be sure that the motors are off.

9.1. Open the front door (Ref.2).

9.2 Seize the knife (Ref.12), pull it away from the magnets and take it out.

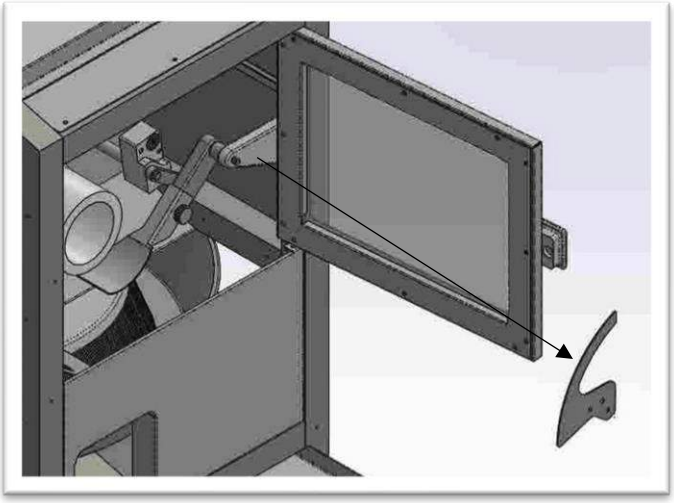

9.3 Unscrew the knob (Ref.4) and take away the dough support (Ref.6).

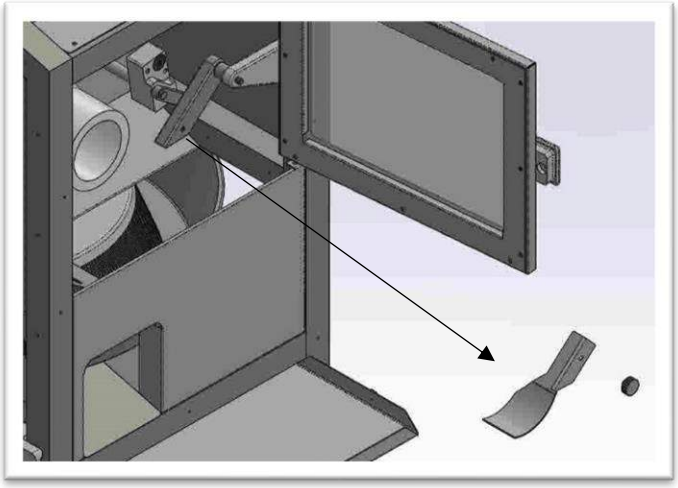

9.4 Loosen the knob (Ref.17) in order to free the cone (Ref.18), turning it slightly(clockwise) and take it out of its place.

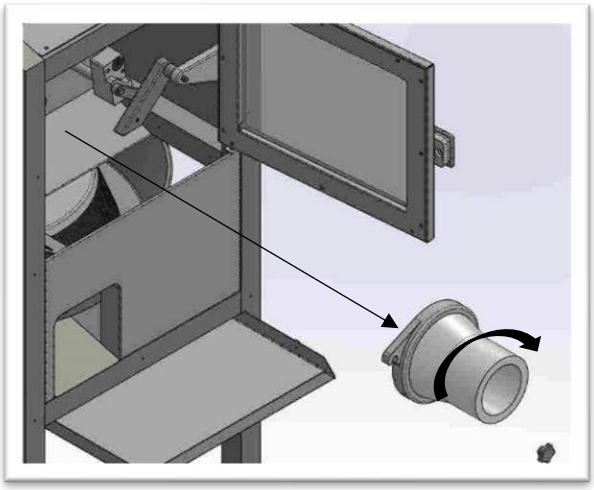

9.5 Clean the sensor (Ref.49) with a soft cloth.

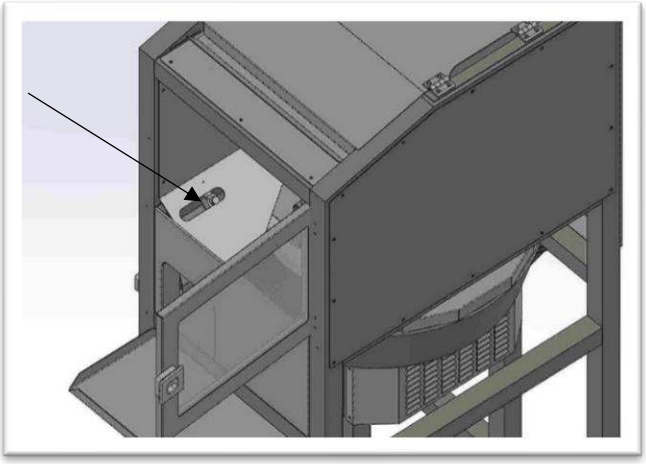

9.6 Unscrew the knob (Ref.42) placed at the back of the machine.

9.7 Take out the central bar (Ref.21) and the auger (Ref.20).

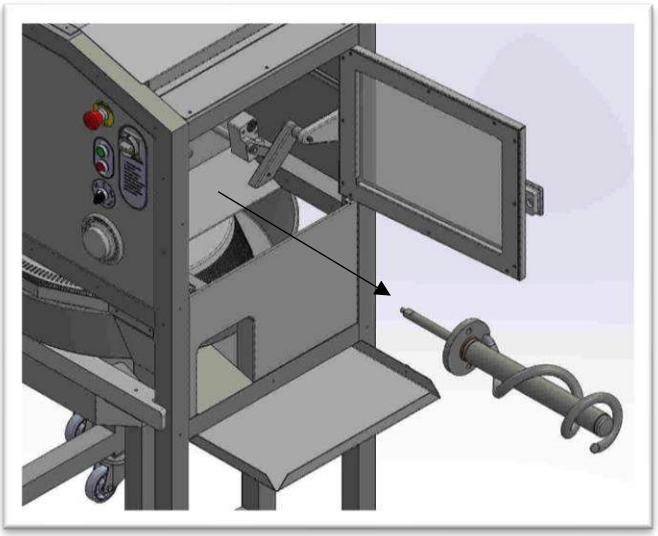

9.8 Clean everything and before reassembling, remove possible dough remains from the interlocking areas.

9.9 Reposition the central bar (Ref.21) inside the auger (Ref.20) which must fit at the two pins of the flanged shaft support (Ref.46).

9.10 Make sure that the central bar is correctly fitted in the groove of the reducer bridge (Ref.44) and fix everything with the knob (Ref.42).

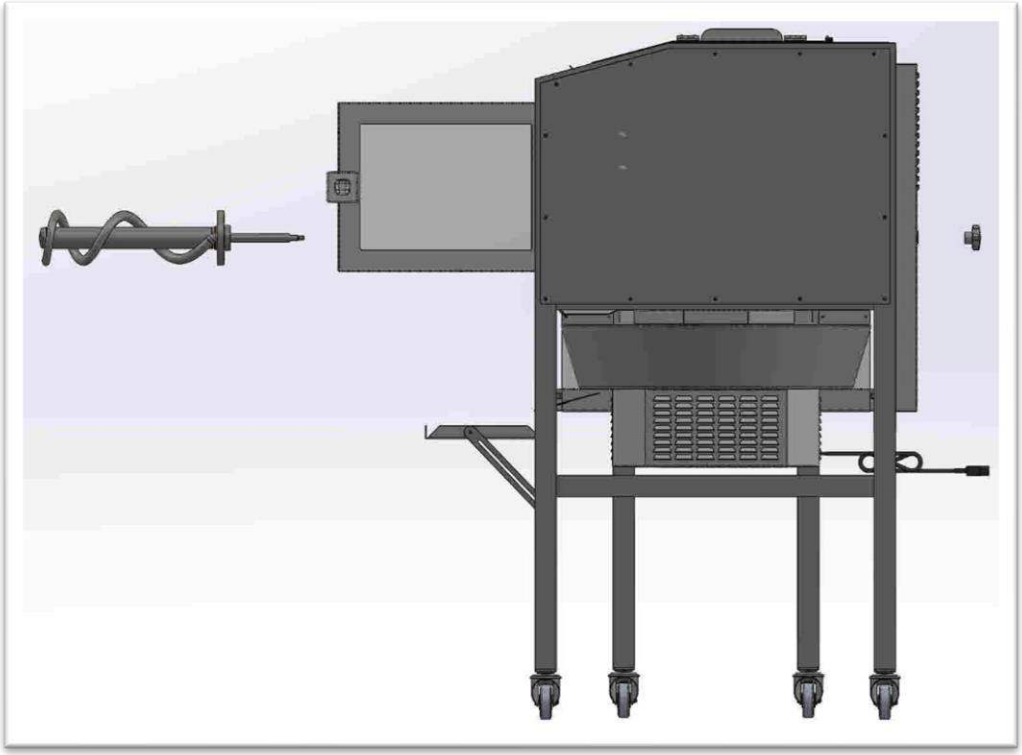

9.11 Clean and remove all possible remains of dough and/or flour from the dough hopper.

DOUGH ROUNDER

10. Pull the plug (Ref.32).

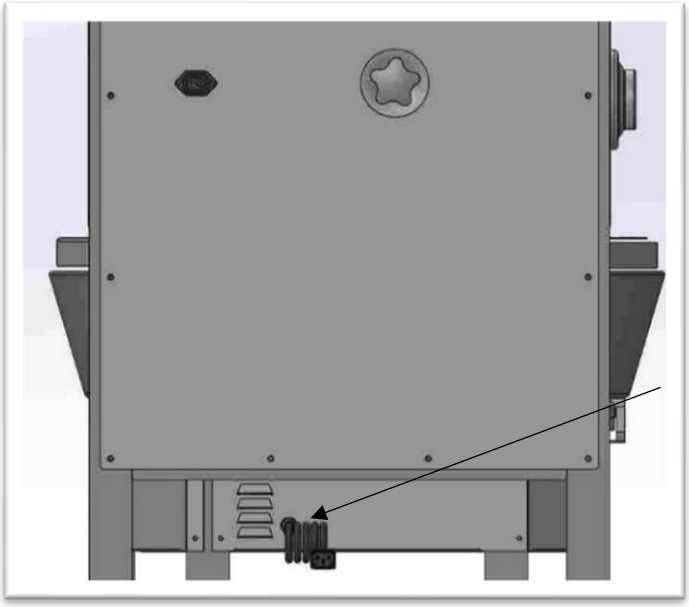

10.1. Grip the two levers on the bar (Ref.28) and pull out the dough rounder towards the operator to take out the central cone (Ref.3).

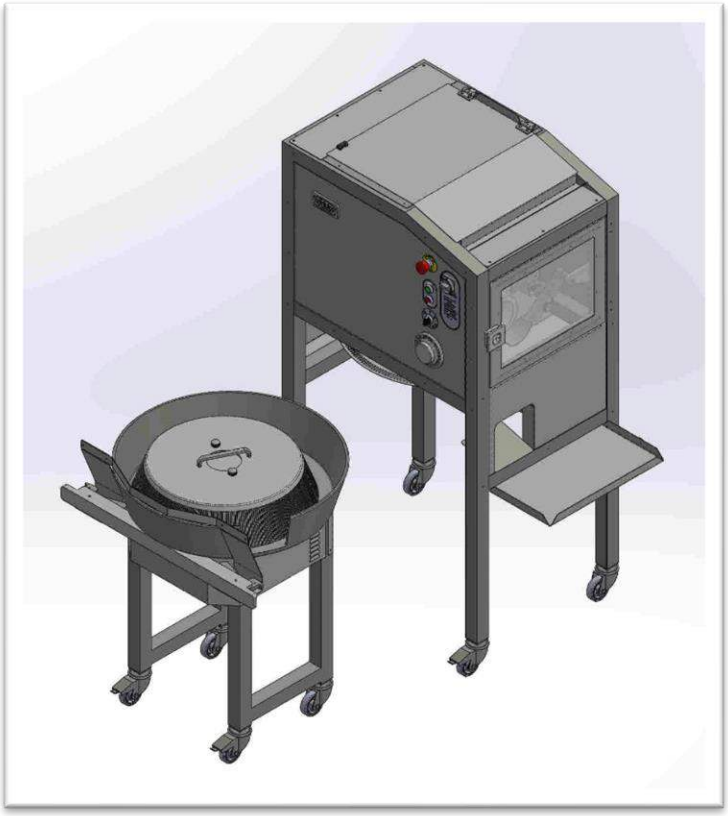

10.2. Unscrew the two knobs (Ref.1) and take out the central cone (Ref.3) by its handle (Ref.2).

WARNING: this part is very heavy.

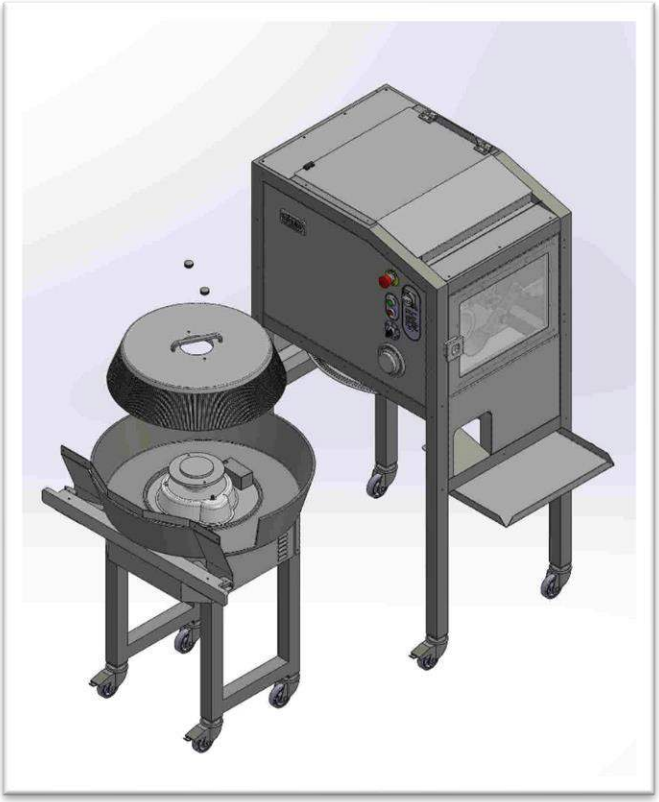

10.3. The central cone (Ref.3) and the base (Ref.14) may be cleaned with a damp cloth with water and food sanitizer.

10.4. The reassembly is in reverse of the disassembly.

Always remember to try the machine without dough after each cleaning.

As far as the cleaning of the housing is concerned, a daily dry cleaning of all dough and flour remains is sufficient. We remind you that the housing of the machine should NEVER be washed with sodium hypochlorite-based solutions or with abrasive detergents since these could damage the external parts of the machine.

WARNING: do not wash the machine with water jets for safe working.

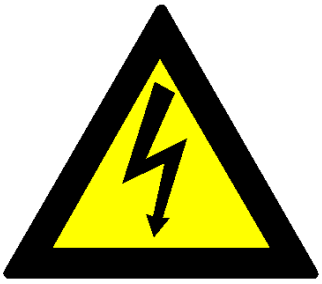

11. REGULAR MAINTENANCE

The machine does not need any lubrication or maintenance.
Regularly check the condition of the mains cable.

KNIFE RESET
Should the knife not be in its correct position, you can reset the machine turning the weight regulation knob beyond its minimum point (beyond the sign -). In this way, the knife (Ref.12) and the dough support (Ref.6) go back to their original position.

12. REPAIR

For repairs, controls or replacement of damaged parts, we suggest you apply directly to the manufacturer or to replace the damaged parts with equivalent materials, especially as far as safety is concerned:
- power cord with plug(2 phases + ground)
- switch (push button)

Before any mechanical or electrical maintenance, it is compulsory to switch the machine off and to pull the plug.

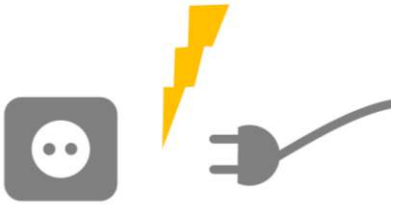

WARNING: the repairs are to be carried out by qualified people.
Regularly check the condition of the machine, of the power cord and plug.

13. LOUDNESS

The pondered equivalent continuous level of acoustic pressure A produced by the machine while operating under load is under 70 decibels(A) and that the maximum pondered instantaneous value of acoustic pressure C is under 130 decibels.

14. ESSENTIAL REQUIREMENTS

All our machines have been designed and manufactured strictly in compliance with the current national and international norms, more particularly:
UNI EN ISO 7010: 2015.
UNI EN ISO 12100: 2010.
UNI EN ISO 13849-1: 2016.
UNI EN ISO 13857: 2008 + EC1: 2010.
UNI EN ISO 14119: 2013.
UNI EN ISO 14120: 2015.
CEI EN 60204-1: 2006 + EC1: 2010.
UNI EN 1672-2: 2009.

Once assembled and before being packed, all our machines undergo a checking test to control:
Earth continuity
Dielectric rigidity
Insulation
Starting of the machine empty, recording: the absorbed power, the applied tension, absorbed Amperes.

BakeMax®

www.BakeMax.com

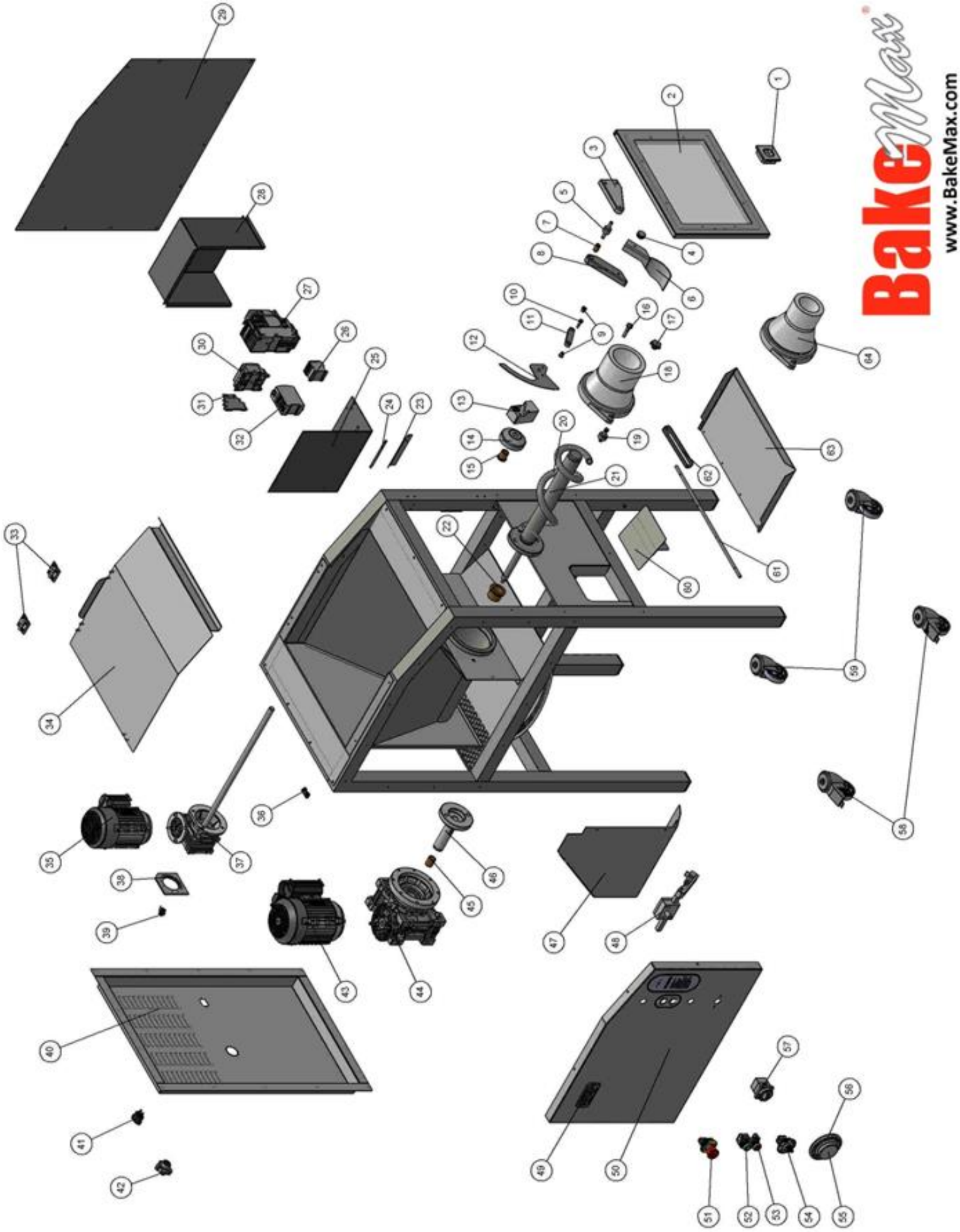

BakeMax®

www.BakeMax.com

REFERENCE	CODE	DESCRIPTION	QUANTITY
1	A.602.409.2	DOOR HANDLE	1
2	A.200.013.0	DOOR ASSEMBLY	1
3	A.602.203.0	DOUGH SUPPORT BLOCK SUPPORT	1
4	X.802.0225	S/S KNOB	2
5	A.602.204.0	DOUGH SUPPORT BLOCK SHAFT	1
6	A.600.214.0	DOUGH SUPPORT	1
7	X.802.0123	BRONZE BUSHING	1
8	A.602.205.0	DOUGH SUPPORT BLOCK	1
9	X.802.1122	FLANGED BRONZE BUSHING	2
10	A.602.207.0	CONNECTING ROD PIN	1
11	A.602.206.0	CONNECTING ROD	1
12	A.602.208.0	KNIFE	1
13	B.602.014.0	KNIFE SUPPORT BLOCK	1
14	A.602.202.0	REDUCER PIN SUPPORT COLLET	1
15	X.802.0046	FLANGED BRONZE BUSHING	1
16	B.602.024.0	PIN	1
17	S.602.115.0	KNOB	1
18	B.200.005.0	CONE Ø103	1
19	B.602.023.0	BLOCKING SPACER	1
20	B.200.003.0	AUGER	1
21	B.200.004.0	CENTRAL BAR ASSEMBLY	1
22	X.802.0257	FLANGED BRONZE BUSHING	1
23	A.600.213.0	REFLECTOR SUPPORT	1
24	X.803.0150	REFLECTOR	1
25	C.600.153.0	ELECTRIC SYSTEM SUPPORT	1
26	X.803.0050	MINICONTACTOR	1
26B	X.803.0172	CONTACTOR	1
27	X.803.0160	INVERTER 230V 50HZ	1
27B	X.803.0161	INVERTER 115V 50HZ	1
28	C.600.154.0	ELECTRIC SYSTEM COVER	1
29	A.600.202.0	RIGHT PANEL	1
30	X.803.0182	PLC TRANSISTOR 2080-LC10-12QBB	1
31	X.803.0179	RELAY+TERMINAL BLOCK 700 HLT 12U24	2
32	X.803.0168	24V FEEDER	1
33	X.802.0224	HINGE	2
34	B.600.102.0	HOPPER COVER	1
35	R.005.001.0	KNIFE MOTOR 230V 50HZ	1
35B	A.005.004.0	KNIFE MOTOR 115V 60HZ	1
36	X.803.0116	MAGNETS	1
37	B.602.029.0	KNIFE GEARBOX SHAFT	1

38	A.602.118.0	MICRO SUPPORT CLAMP	1
39	X.803.0020	MICROSWITCH	1
40	B.600.100.0	REAR PANEL	1
41	X.803.0124	IEC SOCKET	1
42	X.802.0209	KNOB	1
43	P.005.003.1	MOTOR 230V 50HZ	1
43B	C.005.001.0	MOTOR 115V 60HZ	1
44	A.200.000.0	GEARBOX ASSEMBLY	1
45	X.802.0258	CYLINDRICAL BRONZE BUSHING	1
46	B.602.025.0	FLANGED BRONZE BUSHING	1
47	B.600.103.0	INTERNAL PANEL	1
48	A.206.027.0	REGULATION ASSEMBLY	1
49	A.500.002.0	FRIULCO METALLIC PLATE	1
50	A.600.201.1	LEFT PANEL	1
51	X.900.0001	EMERGENCY PUSH BUTTON	1
52	X.900.0003	GREEN PUSH BUTTON	1
53	X.900.0004	RED PUSH BUTTON	1
54	X.900.0005	SELECTOR	1
55	A.602.407.0	WEIGHT REGULATION KNOB	1
56	A.602.406.1	GRADUATED RING	1
57	X.900.0007	GENERAL DISCONNECTOR	1
58	X.802.0183	CASTER WITH BRAKE	2
59	X.802.0182	CASTER	2
60	B.602.107.0	CHUTE	1
61	A.602.217.0	TRAY PIN	1
62	A.600.212.1	TRAY SUPPORT ROD	1
63	A.600.210.1	TRAY	1
64	B.200.007.0	CONE ø75	1

BakeMax®

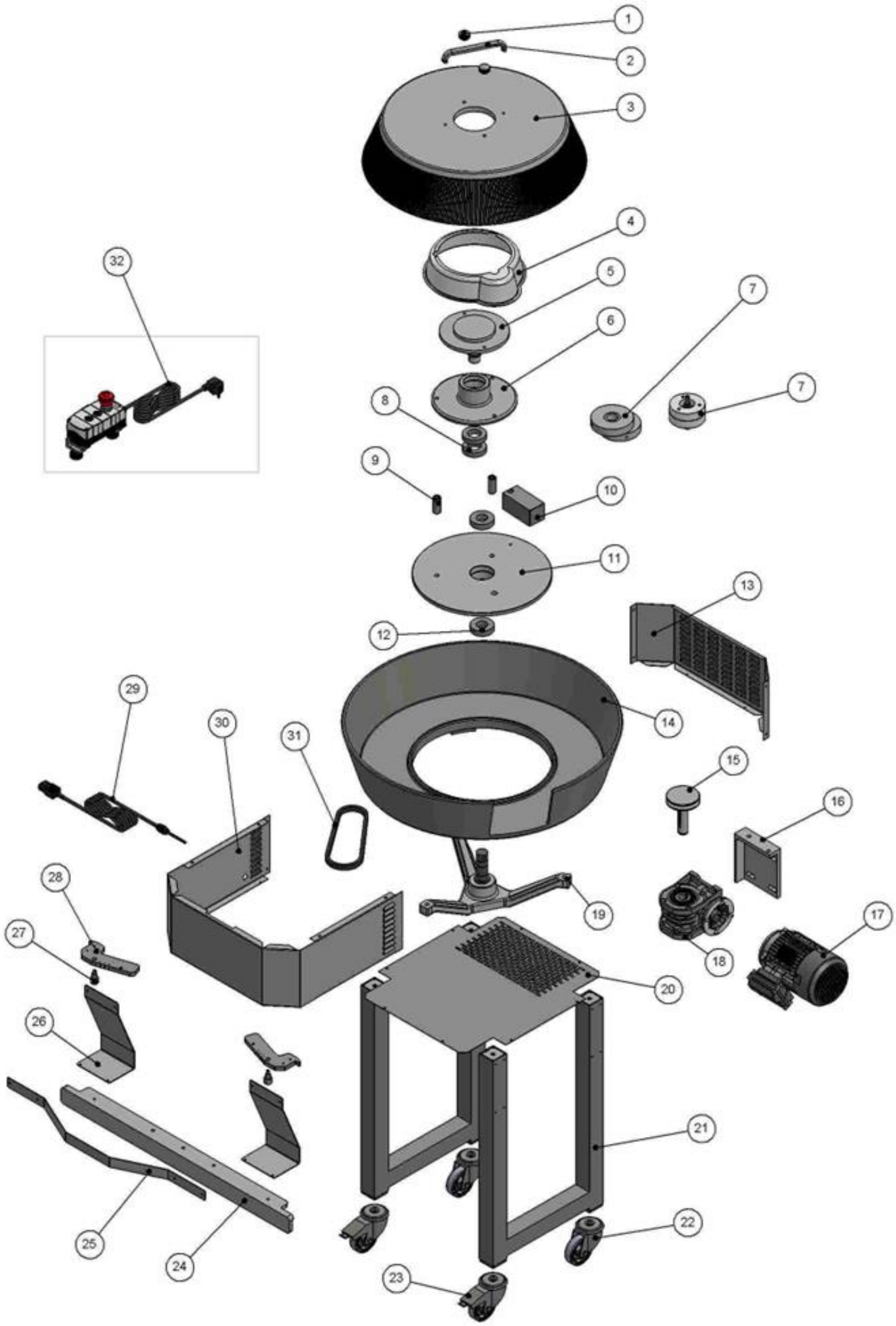
1
2
3
4
5
6
7
7
8
9
10
11
12
13
14
15
16
17
18
19
20
21
22
23
24
25
26
27
28
29
30
31
32

REFERENCE	CODE	DESCRIPTION	QUANTITY
1	DBR03/001	S/S KNOB	2
2	DBR03/002	CONE HANDLE	1
3	DBR03/003	CENTRAL CONE	1
4	DBR03/004	GEARS PROTECTION	1
5	DBR03/005	CONE DRIVE FLANGE	1
6	DBR03/006	COUNTERFLANGE	1
7	DBR03/007	GEARS ASSEMBLY	1
8	DBR03/008	BEARING	2
9	DBR03/009	FLANGE SPACER	2
10	DBR03/010	COUNTERWEIGHT	1
11	DBR03/011	DRIVING FLANGE	1
12	DBR03/012	BEARING	2
13	DBR03/013	REAR PANEL	1
14	DBR03/014	LARGE CIRCULAR BASE	1
15	DBR03/015	PULLEY	1
16	DBR03/016	GEARBOX SUPPORT CLAMP	1
17	DBR03/017	MOTOR 115V 60Hz	1
18	DBR03/018	GEARBOX	1
19	DBR03/019	SUPPORT SPOKE	1
20	DBR03/020	PROTECTION BOTTOM	1
21	DBR03/021	LEG	2
22	DBR03/022	CASTER	2
23	DBR03/023	CASTER WITH BRAKE	2
24	DBR03/024	BLOCKING ROD	1
25	DBR03/025	FRONT PROTECTION	1
26	DBR03/026	GUARD	2
27	DBR03/027	PIN	2
28	DBR03/028	HANDLE	2
29	DBR03/029	CABLE WITH PLUG	1
30	DBR03/030	FRONT PANEL	1
31	DBR03/031	BELT	1
32	DBR03/032	REMOTE SWITCH POWER CORD	

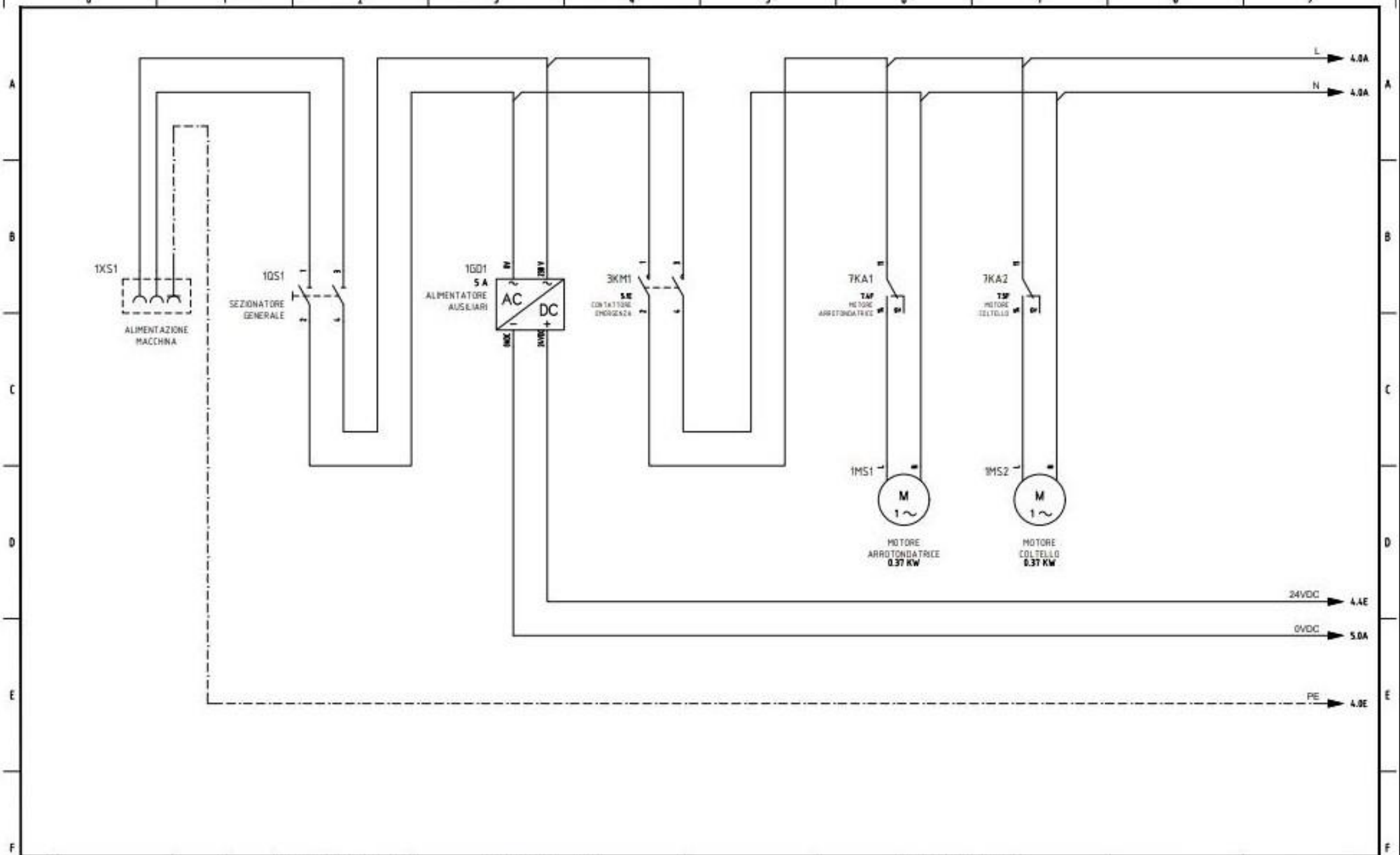

				DATA	29/09/2021	FRIULCO SRL Via Ponte Giulio, 64 33085 Maniago (PN)			Quadro Controllo M48/M50		
				DISEGN.	G.M.D.						
				VISTO	G.M.D.				DISTRIBUZIONE	09/2021	FG. 1
REV.	MODIFICA	DATA	FIRMA	APPR.	G.M.D.	SOST. IL :	SOST. DA :	FILE : M48/M50			F.S. 2

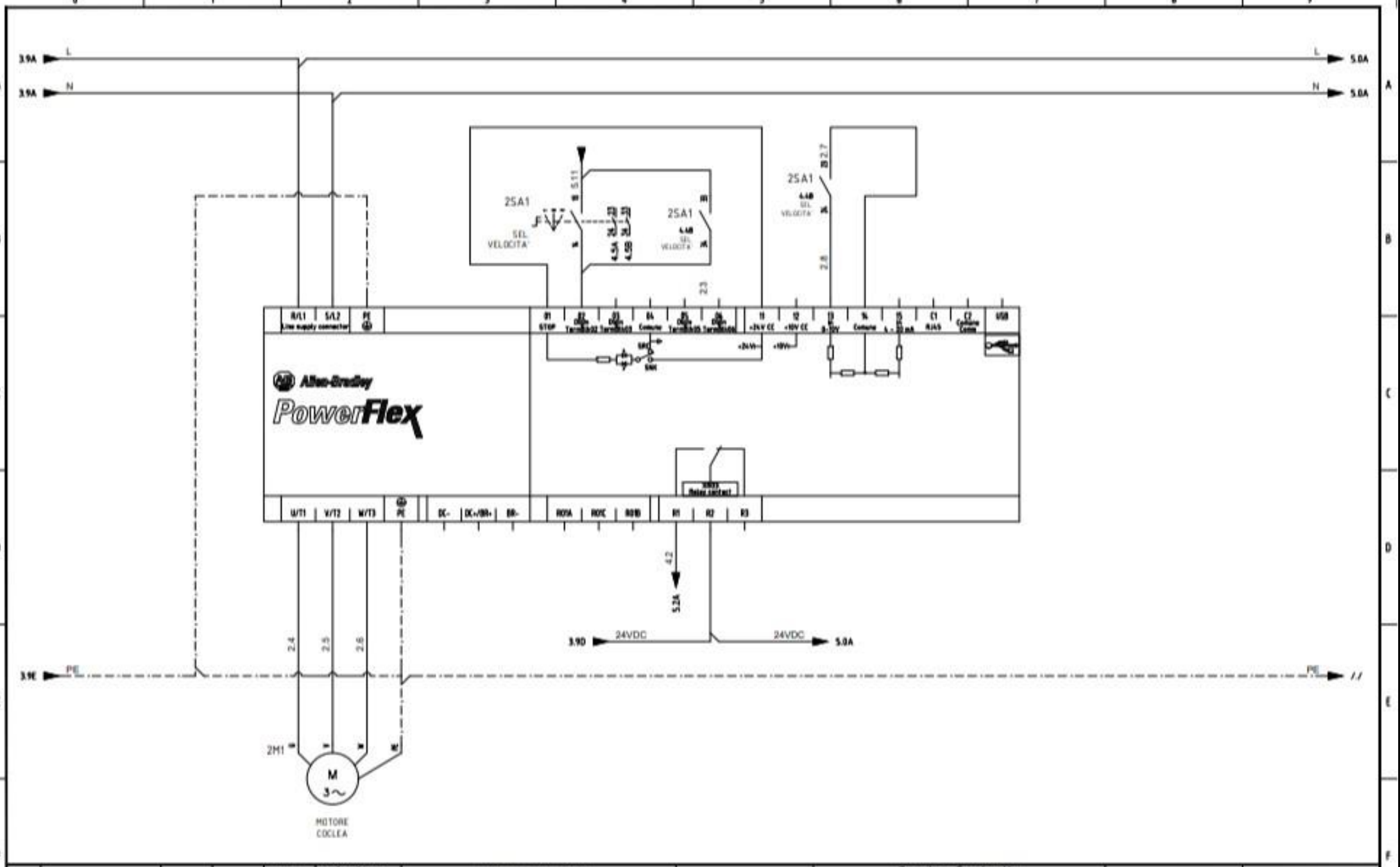

				DATA	29/09/2021	FRIULCO SRL Via Ponte Giulio, 64 33085 Maniago (PN)		Quadro Controllo M48/M50		
				DISEGN.	G.M.D.					
				VISTO	G.M.D.			INVERTER COCLEA	09/2021	FG. 2
REV.	MODIFICA	DATA	FIRMA	APPR.	G.M.D.	SOST. IL :	SOST. DA :	FILE : M48/M50		F.S. 3

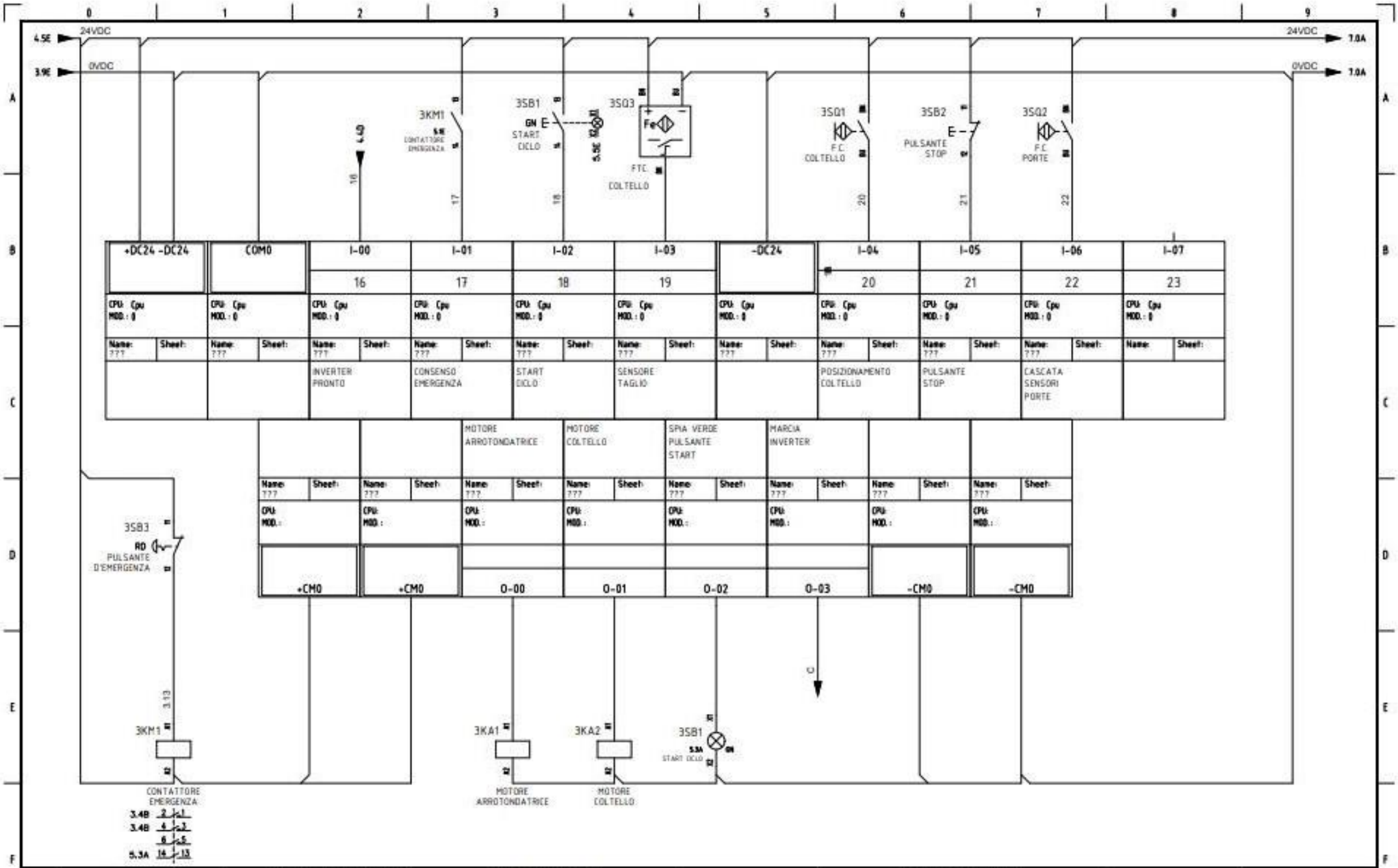

				DATA	29/09/2021	FRIULCO SRL Via Ponte Giulio, 64 33085 Maniago (PN)		Quadro Controllo M48/M50			
				DISEGN.	G.M.D.						
				VISTO	G.M.D.			POTENZA MOTORI			FG. 3
REV.	MODIFICA	DATA	FIRMA	APPR.	G.M.D.	SOST. IL :	SOST. DA :	FILE : M48/M50		09/2021	2d ConnectionPoints

Warranty & Service

BakeMax provides a 1-Year Limited Parts and Labor warranty on most items, there are select items which carry a Limited 2-Year Warranty. Extended Warranty is available on some products. Please contact us for details. The Warranty is not transferable and is limited to original installation of equipment sold by BakeMax for the original user.

For all Warranty Claims, Proof of Purchase and/or Serial Number is required. Once the machine is approved, BakeMax will provide our customers with on-site Warranty Coverage on all equipment more than 100lbs. BakeMax assumes no responsibility for down time or loss of product. Repairs must be Pre-Authorized by BakeMax and have a Service Authorization Number issued prior to commencing Warranty Service.

Warranty begins 10-Days after shipping from warehouse; delays in installation which would extend the Warranty must be Approved. All equipment must be installed and connected by Qualified Professionals in accordance with the Manual Specification. Products shipped are to be inspected at time of delivery, the receiver is responsible for inspection.

Any abuse or improper use of the equipment will void the warranty. This includes failure to follow all cleaning instructions, improper installation, improper maintenance, failure to follow capacity charts, improperly wired electrical connections. The Warranty does not apply to abuse, willful or accidental damage, or to products used for other than their intended purpose. Normal wear parts such as Accessories, Attachments, or Electrical Components such as Fuses, Bulbs, Elements, and Switches carry a 90-Day Warranty only.

Bench Warranty (Machines Weighing 100 lb. or less)

Once the machine is Approved for Warranty Service, if the machine requires Warranty work in less than 30 days of purchase date, BakeMax will pay all shipping charges. Once the machine is received and repaired it will be returned to the user at BakeMax expense. Freight Damages during return shipping is the responsibility of the owner of the machine.

The following is not covered under the BakeMax Warranty:

1. Overtime Labor Rates are not covered by BakeMax.
2. All parts will be shipped via Ground Courier only; If Express Shipping is required, it will be the responsibility of the Customer or Dealer.
3. Travel for Warranty Service is covered up to 100 Miles /160 Km Roundtrip, any further milage will be the responsibility of the Customer or Dealer.
4. There is no on-site Warranty Service for Residential Addresses or addresses outside of the contiguous United States (*Lower 48)* or Canada.

***BakeMax machines sold outside of the contiguous United States* (*Lower 48), or Canada will carry 1-Year Parts Warranty only.*

Terms & Conditions

Terms
Net 15 days subject to Credit Approval. All past due Accounts are subject to 2% per month Service Charge as per Credit Application. We accept Visa, MasterCard, and Discover Credit Cards. We also accept E-Transfer & Wire Transfer, additional fees may apply.

Pricing
All prices are subject to change without notice. All prices are Sales Tax Extra, should you be claiming Tax Exemption, Tax Exempt Forms must accompany your Purchase Order. BakeMax products are sold in Canadian and US Dollars. BakeMax is not responsible for specifications errors or printing errors.

Shipping
Free shipping to Canada and the U.S. Minimum order $6,000 for BakeMax and $10,000 for BakeMax America Cooking Line. Tailgate Delivery is $90.00 minimum. All checks made Payable to Titan Ventures International Inc. BakeMax is not responsible for goods damaged during shipping. BakeMax is not responsible for any delays in delivery once product has left our Warehouse and is in the carrier's possession. Products shipped are to be inspected at time of delivery, the receiver is responsible for inspection. Damaged Freight Claims are to be claimed with the carrier. BakeMax assumes no responsibility for Damaged Freight. Shipping Insurance available by request. By signing your name on the delivery receipt without noting any damages, you are stating that you have received your shipment in Acceptable Condition.

Return Policy
Returns will not be Approved unless in Writing. Returns must be made within 30-Days of Purchase and must have a Return Authorization Number issued before returning. The purchase order number, reason for return, and the serial number(s) of the unit are required for the Return Authorization Number. Minimum return amount of $100.00.
Returns are subject to a minimum restocking fee of 30%. The cost of any repairs or re-crating required will be charged back to the dealer. If there is a manufacturer's defect BakeMax® will pay standard freight returned and prepaid shipping back to the customer.
Special Order Items, Clearance / Discontinued Equipment, Parts, Refurbished/Demo Equipment, or Non-Standard items are not Returnable.

Ordering Information
Send purchase orders to BakeMax via e-mail orderdesk@bakemax.com or Fax (506-859-6929). Use Model or Part number when ordering including Voltage Requirements, and Product Description. Please include the Dealer, Name, Address, terms, special delivery, or instructions required or attention names to be applied to packaging. Please notify BakeMax should you need order confirmation or tracking numbers, by calling 1-800-565-2253 or email orderdesk@bakemax.com.

Special Terms and Conditions
BakeMax reserves the right to make improvements or equipment changes without prior permission. Setup and Installation are the end user's Responsibility. Failure to properly Install or Maintain Equipment may Void Warranty.

Catalog, Spec Sheets and Website
BakeMax is not liable for incorrect information found in our Catalog, Spec Sheets or Website. Please contact us to confirm specifications. Pictures and specifications are for general purposes only. Product may not be exactly as shown. Prices and availability may change at any time without notice. Dimensions shown may change at any time without notice.