# MC0330, MC0530, MC0630, MC0830, MC1030 Service Parts

This part list contains the service parts for the air cooled, water cooled and remote air cooled MC0330, MC0530, MC0630, MC0830, MC1030 ice machines. The models covered in this part list may vary in cube size, electrical voltage, cabinet height and condensing system.

To avoid costly and time consuming errors, double check the model and voltage before ordering a part. Avoid ordering the part number printed on the part, it is a production part number. Service part numbers can be different. Look up the part number in the parts list.

Note: These abbreviations are used in this list:

- AC = Air Cooled
- WC = Water Cooled
- RC = Remote Cooled
- HGV = Hot Gas Valve
- TXV = Thermostatic Expansion Valve
- Volt = Voltage
- Sol Vlv = Solenoid Valve
- Hdwe = Hardware

Contents


Cabinet - MC0330, MC0530, MC0630 . . . . . Page 3

Cabinet - MC0830, MC1030 . . . . . Page 4

Interior Parts . . . . . Page 5

Evaporator Compartment . . . . . Page 6

Fan and Condenser Area MC0330 Air Cooled . . . . . Page 7

Fan and Condenser Area MC0530 thru MC0830 Air Cooled . . . . . Page 8

Fan and Condenser Area MC1030 Air Cooled . . . . . Page 9

Air Cooled Refrigeration System . . . . . Page 10

Water Cooled Refrigeration System MC0330 thru MC0830 . . . . . Page 11

Water Cooled Refrigeration System MC1030 . . . . . Page 12

Water or Remote Cooled Back Panel . . . . . Page 13

Remote Refrigeration System . . . . . Page 14

Electrical and Control Box . . . . . Page 15

Compressors . . . . . Page 16

Compressor Mounting Hardware / Crankcase Heater . . . . . Page 17

Remote Condenser, ERC111, ERC211 and ERC311 . . . . . Page 18

# MC0330, MC0530, MC0630, MC0830, MC1030 Service Parts


Wiring Diagram MC0330, MC0530 or MC0630 . . . . . Page 19

Schematic Diagram MC0330, MC0530 or MC0630 . . . . . Page 20

Wiring Diagram MC0530R or MC0630R . . . . . Page 21

Schematic Diagram MC0530R or MC0630R. . . . . Page 22

Wiring Diagram MC0830 MC1030 Air or Water -32 . . . . . Page 23

Schematic Diagram MC0830 MC1030 Air or Water -32. . . . . Page 24

Wiring Diagram MC0830, MC1030 Air or Water -3 . . . . . Page 25

Wiring Diagram MC0830, MC1030 Air or Water -3 . . . . . Page 26

Wiring Diagram MC0830, MC1030 Remote -3. . . . . Page 27

Schematic Diagram MC0830, MC1030 Remote -3 . . . . . Page 28

Wiring Diagram MC0830, MC1030 Remote -32 . . . . . Page 29

Schematic Diagram MC0830, MC1030 Remote -32 . . . . . Page 30

# MC0330, MC0530, MC0630, MC0830, MC1030 Service Parts

## Cabinet - MC0330, MC0530, MC0630

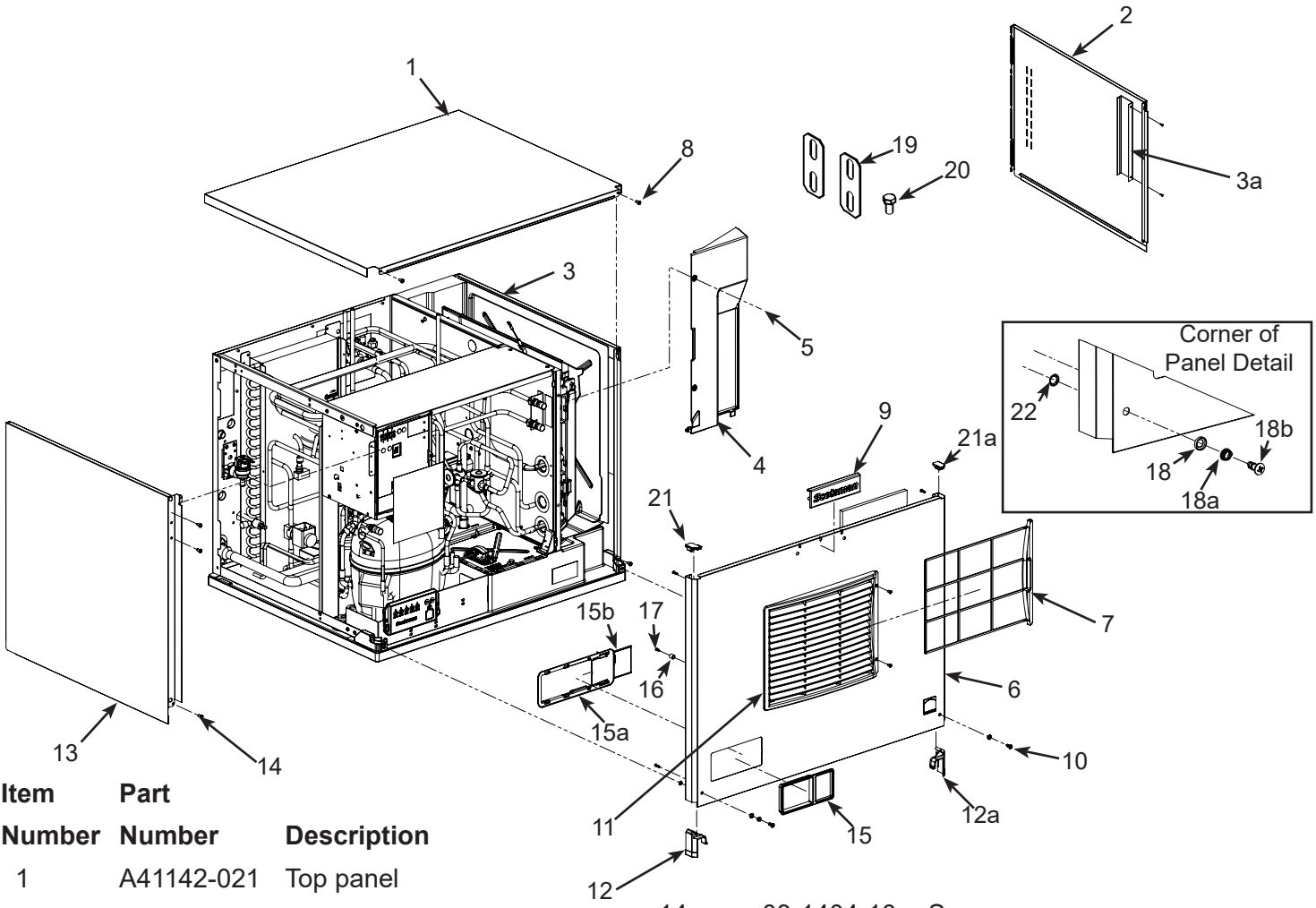


| Item Number | Part Number | Description |
|---|---|---|
| 1 | A41142-021 | Top panel |
| 2 | A41144-021 | Right side panel |
| 3 | 02-4336-01 | Right side liner |
| 3a | A40511-001 | Liner bracket |
| 4 | 02-4240-01 | Evaporator cover** |
| 5 | 03-0727-05 | Thumbscrew |
| 6 | A41141-021 | Front panel, AC* |
| | A41141-022 | Front panel, WC* |
| 7 | 02-4212-03 | Air filter |
| 8 | 03-1419-26 | Screw |
| 9 | 02-5154-01 | Emblem |
| 10 | 03-1735-03 | Screw |
| 11 | 02-4224-03 | Louvers |
| 11A | 03-1419-26 | Screw |
| 12 | 02-5141-01 | Bottom left corner |
| 12a | 02-5141-02 | Bottom right corner |
| 13 | A41143-021 | Left side panel, air |
| | A41143-022 | Left side panel, water |
| 14 | 03-1404-10 | Screw |
| 15 | 02-5142-01 | Bezel with standard door |
| 15a | 02-5143-01 | Door, bezel |
| 15b | 02-5143-02 | Door, bezel secure |
| 16 | 02-4824-01 | Spacer |
| 17 | 03-1731-02 | Screw |
| 18 | 03-1731-04 | Cupped washer |
| 18a | 03-1731-03 | Spring |
| 18b | 03-3838-02 | Screw |
| 19 | A30911-015 | Machine straps |
| 20 | 03-1405-15 | Screw |
| 21 | 02-5140-01 | Top left corner |
| 21a | 02-5140-02 | Top right corner |
| 22 | 03-1731-01 | Retainer |

* Front panels are complete, including air filters and all trim, bezels, labels and screws.

** Order 2 feet of foam gasket with evaporator cover. Part 13-0943-07.

# MC0330, MC0530, MC0630, MC0830, MC1030 Service Parts

## Cabinet - MC0830, MC1030

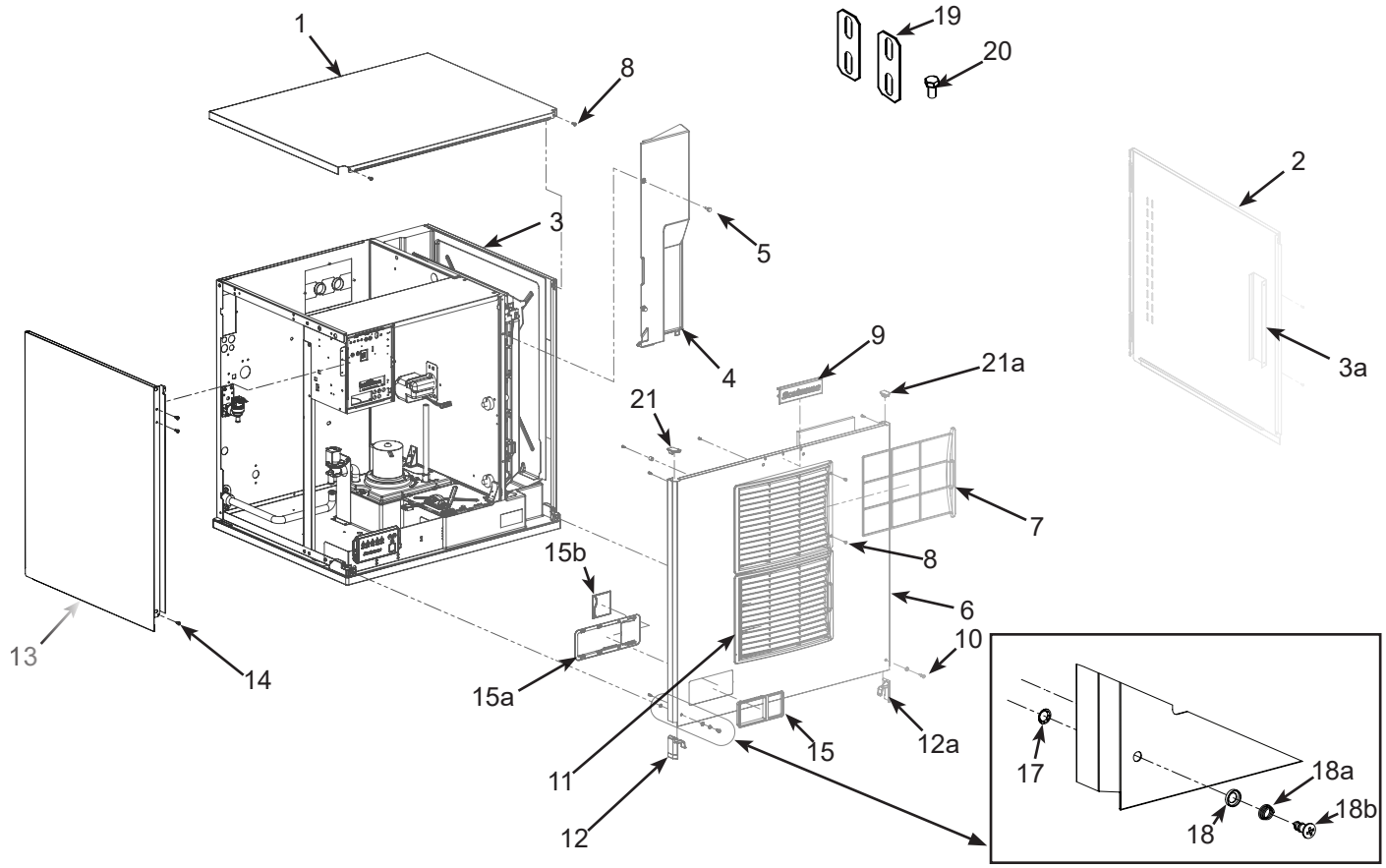


| Item Number | Part Number | Description |
|---|---|---|
| 1 | A41142-021 | Top panel |
| 2 | A41144-022 | Right side panel |
| 3 | 02-4336-02 | Right side liner |
| 3a | A40511-001 | Liner bracket |
| 4 | 02-4240-02 | Evaporator cover** |
| 5 | 03-0727-05 | Thumbscrew |
| 6 | A41141-023 | Front panel, AC* |
| | A41141-024 | Front panel, WC, RC* |
| 7 | 02-4212-03 | Air filter |
| 8 | 03-1419-26 | Screw |
| 9 | 02-5154-01 | Emblem |
| 10 | 03-1735-03 | Screw |
| 11 | 02-4224-03 | Louvers |
| 11A | 03-1419-26 | Screw |
| 12 | 02-5141-01 | Bottom left corner |
| 12a | 02-5141-02 | Bottom right corner |
| 13 | A41143-023 | Left side panel, air |
| | A41143-024 | Left side panel, water, remote |
| 14 | 03-1404-10 | Screw |
| 15 | 02-5142-01 | Bezel with standard door |
| 15a | 02-5143-01 | Door, bezel |
| 15b | 02-5143-02 | Door, bezel secure |
| 16 | 02-4824-01 | Spacer |
| 17 | 03-1731-02 | |
| 18 | 03-1731-04 | Cupped washer |
| 18a | 03-1731-03 | Spring |
| 18b | 03-3838-02 | Screw |
| 19 | A30911-015 | Machine straps |
| 20 | 03-1405-15 | Screw |
| 21 | 02-5140-01 | Top left corner |
| 21a | 02-5140-02 | Top right corner |

* Front panels are complete, including air filters and all trim, bezels, labels and screws.

** Order 2 feet of foam gasket with evaporator cover. Part 13-0943-07.

# MC0330, MC0530, MC0630, MC0830, MC1030 Service Parts

## Interior Parts

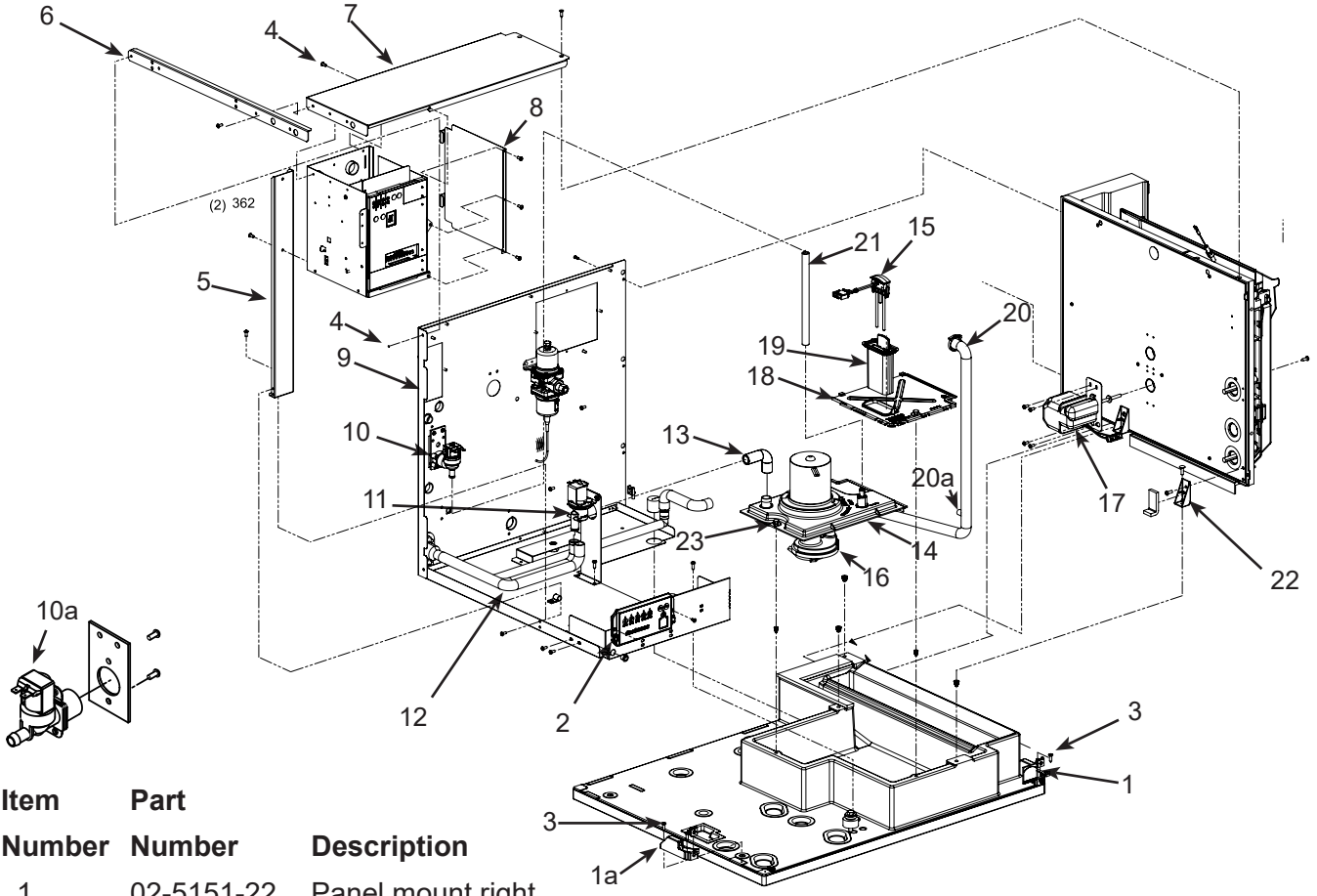


| Item Number | Part Number | Description |
|---|---|---|
| 1 | 02-5151-22 | Panel mount right |
| 1a | 02-5151-21 | Panel mount left |
| 2 | 11-0642-21 | Lower switch panel w/ harness |
| 3 | 03-1404-18 | Screw |
| 4 | 03-1531-01 | Screw |
| 5 | A38607-001 | Strut, 0330-630 |
| | A38629-001 | Strut, 0830, C1030 |
| 6 | A40282-001 | Left side channel |
| 7 | A40283-001 | Control box top |
| 8 | A38537-001 | Control box side |
| 9 | Back panel, see page 14-15 | |
| 10 | 12-3124-01 | Inlet water sol vlv, 115 volt |
| | 12-3124-02 | Inlet water sol vlv, 230 volt |
| | 12-2912-01 | Water valve rebuild kit |
| 10a | 11-0568-02 | Inlet water sol vlv, CE mod |
| 11 | 11-0564-01 | Purge valve, 115 volt |
| | 11-0564-02 | Purge valve, 230 volt |
| 12 | A38860-002 | Drain tube |
| 13 | A38860-001 | Drain hose |
| 14 | 02-4164-01 | Water pump bracket |
| 15 | A41192-021 | Water level sensor |
| 16 | see table | Water pumps |

| Models | 115 volt | 208-230/60 | 50 Hz |
|---|---|---|---|
| 0330, 0530 | 12-2919-21 | 12-2919-22 | 12-2919-26 |
| 0630 | - | 12-2919-22 | 12-2919-26 |
| 0830, 1030 | - | 12-2920-23 | 12-2920-25 |

| | | |
|---|---|---|
| 17 | see table | Harvest assist mechanism |

| Models | 115 volt | 208-230 volt |
|---|---|---|
| 0330, 0530 | 12-3060-21 | 12-3060-22 |
| 0630, 0830, 1030 | - | 12-3060-22 |

| | | |
|---|---|---|
| 18 | 02-4647-01 | Sump cover, use/w item 19 |
| 19 | 02-4646-01 | WLS guard, use/w item 18 |
| 20 | 02-4154-03 | Pump hose, 0830-1030 |
| | 02-4154-02 | Pump hose, 0530-0630 |
| | 02-4154-01 | Pump hose, 0330 |
| 20a | 11-0515-21 | Temp sensor set |
| 21 | 13-0674-02 | Fill hose order by ft |
| | 15-0821-01 | Fill hose, -6 CE models |
| 22 | 02-4152-01 | Gusset |
| 23 | 03-0727-05 | Thumbscrew |

# MC0330, MC0530, MC0630, MC0830, MC1030 Service Parts

## Evaporator Compartment

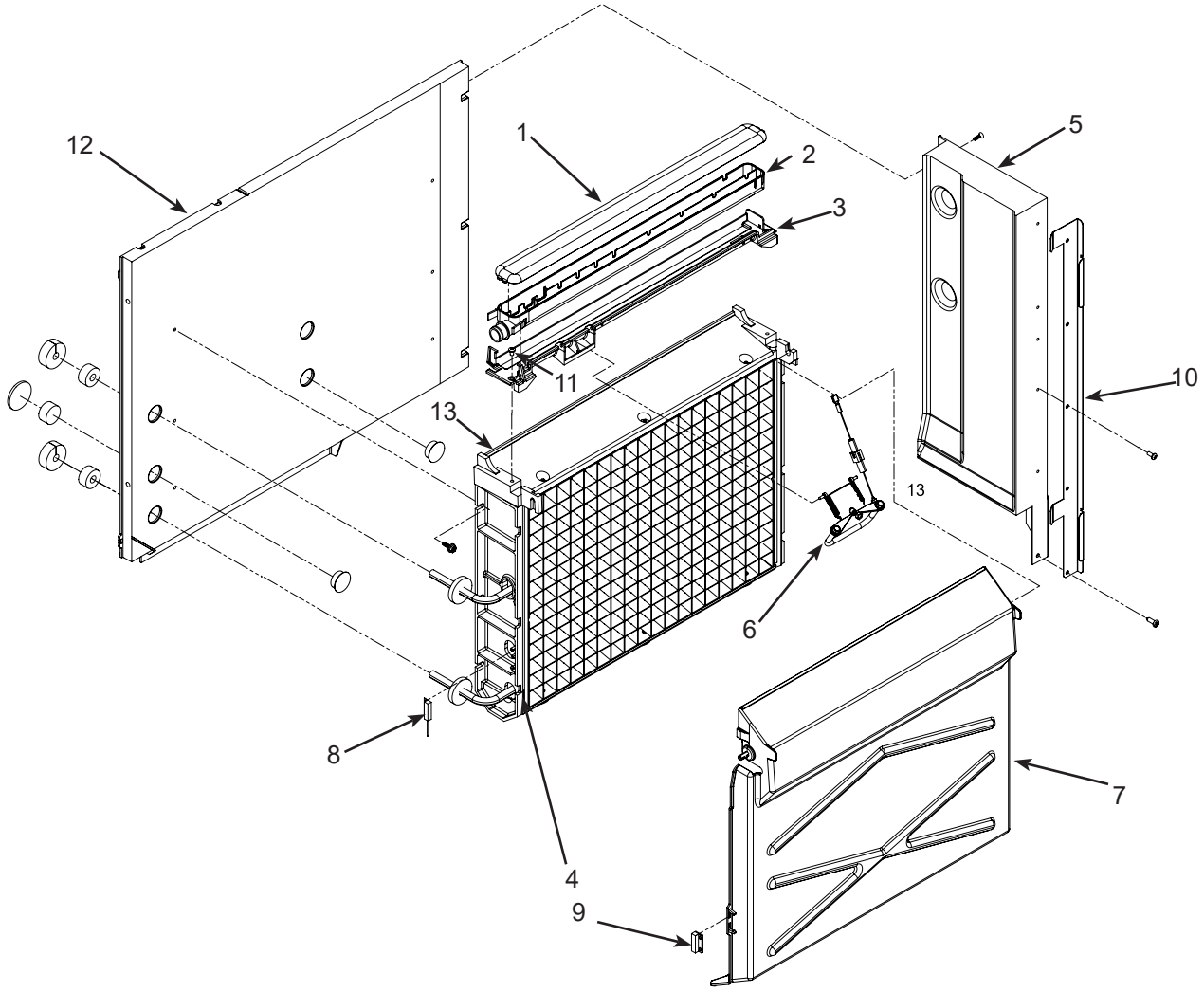


| Item Number | Part Number | Description |
|---|---|---|
| 1 | 02-4065-01 | Water distributor cover |
| 2 | 02-4064-01 | Water distributor |
| 3 | 02-4205-01 | Mounting bracket |
| 4 | see table | Evaporator |

| | small cube | medium cube |
|---|---|---|
| 0330 | A38626-021 | A38626-022 |
| 0530, 0630 | A38627-021 | A38627-022 |
| 0830, 1030 | A38628-021 | A38628-022 |

| | | |
|---|---|---|
| 5 | A38596-001 | Back wall, 0330, 0530, 0630 |
| | A38598-001 | Back wall, 0803, 1030 |
| 6 | A41191-021 | Ice thickness sensor |
| 7 | 02-4100-31 | Curtain, 0330 |
| | 02-4100-32 | Curtain, 0530, 0630 |
| 7a | 02-4611-21 | Curtain, 0830, 1030 |
| 8 | 11-0563-01 | Curtain switch |
| 9 | 11-0563-02 | Curtain switch magnet |
| 10 | A39560-001 | Liner retainer, short* |
| | A39584-001 | Liner retainer long* |
| 11 | 03-1418-30 | Mounting screw |
| 12 | 13-0943-01 | Gasket tape |
| 13 | 02-4156-21 | Spillway replacement kit |

Note: Item 7 includes item 9, shipped loose.

Item 7a magnet is molded into curtain.

Short is 0330, 0530, 0630. Long is 0830 & 1030.

# MC0330, MC0530, MC0630, MC0830, MC1030 Service Parts

## Fan and Condenser Area MC0330 Air Cooled

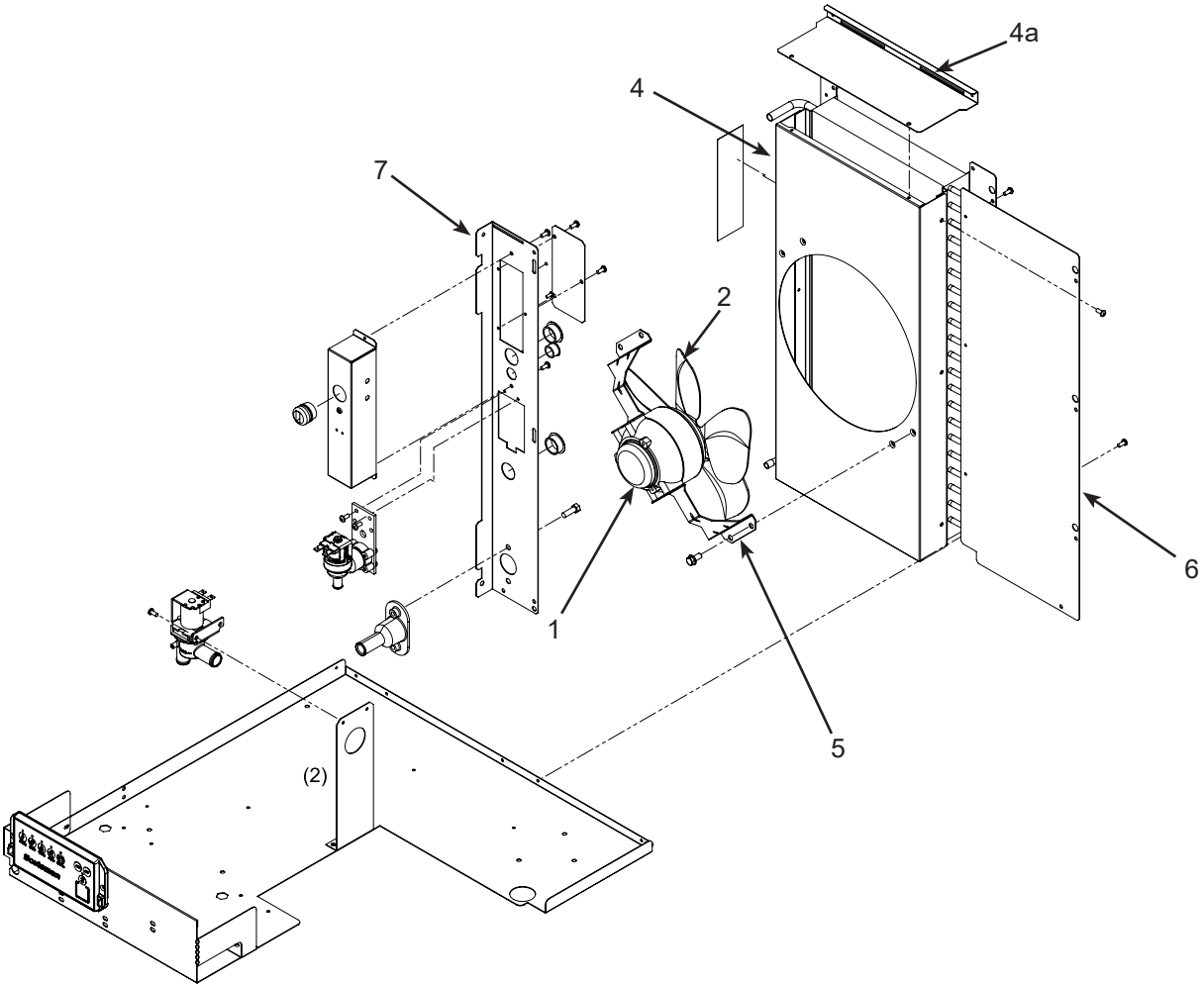


| Item Number | Part Number | Description |
|---|---|---|
| 1 | 12-1681-23 | Fan motor, 0330, 115 volt |
| | 12-1681-04 | Fan motor, 0330, 230 volt |
| 2 | 18-8836-01 | Fan blade, 0330 |
| 3 | 02-3692-21 | Drain adapter - also for WC and RC |
| 4 | A39350-001 | Fan shroud, 0330 |
| 4a | A39593-001 | Fan shroud top |
| 5 | A38480-001 | Fan motor bracket, 0330 |
| 6 | A39606-001 | Back panel |
| 7 | A40418-001 | Utility channel, (Air Cooled) |

# MC0330, MC0530, MC0630, MC0830, MC1030 Service Parts

## Fan and Condenser Area MC0530 thru MC0830 Air Cooled

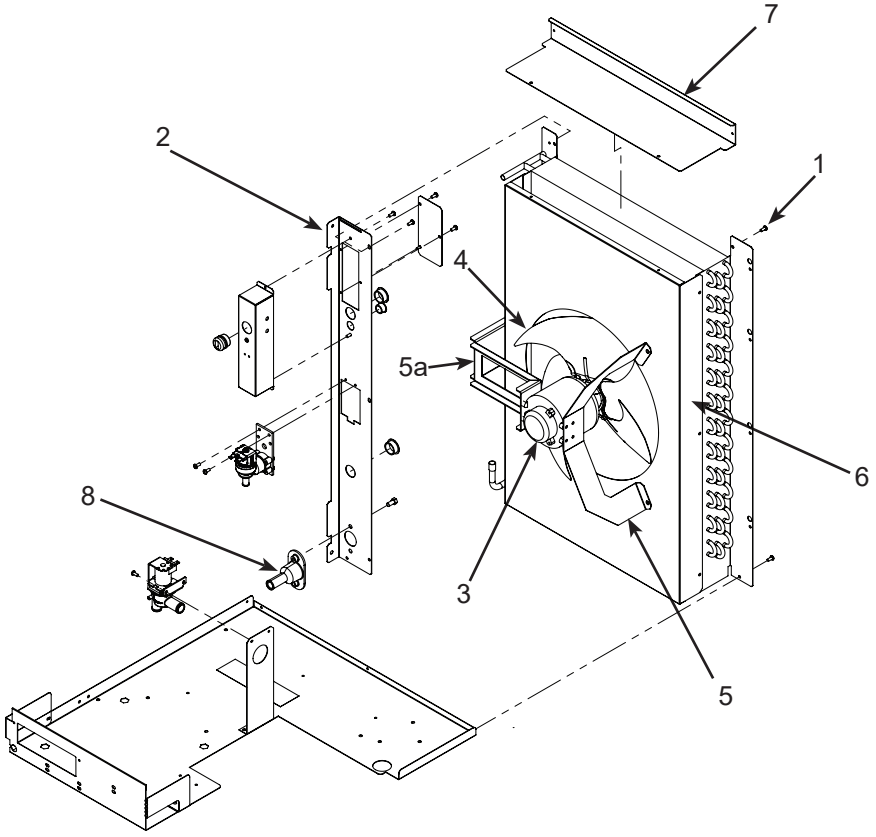


| Item Number | Part Number | Description | Voltage/Hz | Fits Model | Fits series |
|---|---|---|---|---|---|
| 1 | 03-1531-01 | Screw | | all | |
| 2 | A40420-001 | Utility channel | | 0830-1030 | |
| 3 | 18-8926-01 | Fan motor | 115/60 | 0530-1 | |
| | 18-8927-01 | Fan motor | 208-230/60 | 0530, 0630. 0830-32,-3 | |
| 4 | 18-8882-01 | Fan blade | | 0530, 0630, 0830 | |
| 5 | A40156-001 | Fan motor bracket, right | | 0530, 0630, 0830 | * |
| 5a | A40148-001 | Fan motor bracket, left | | 0530, 0630, 0830, | * |
| 6 | A40146-001 | Fan shroud | | 0530, 0630 | * |
| | A40147-001 | Fan shroud | | 0830 | * |
| 7 | A39608-001 | Shroud top | | 0530, 0630 | |
| | A39601-001 | Shroud top | | 0830 | |
| 8 | 02-3692-21 | Drain adapter | | all | |

* Fan blade is .25” from end of shaft.

# MC0330, MC0530, MC0630, MC0830, MC1030 Service Parts

## Fan and Condenser Area MC1030 Air Cooled

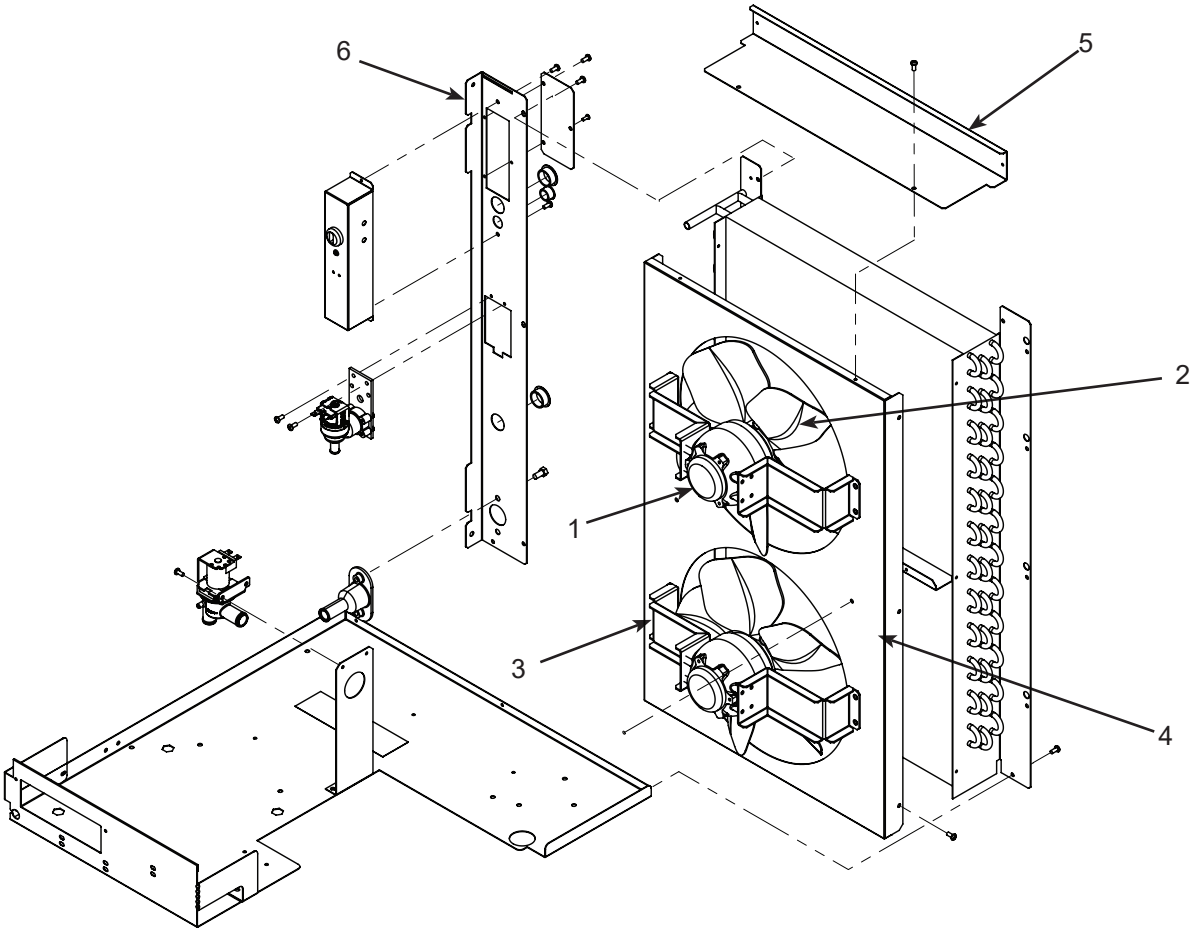


| Item Number | Part Number | Description | Voltage/Hz | Fits Model | Fits series |
|---|---|---|---|---|---|
| 1 | 18-8899-01 | Fan motor | 208-230/60 | MC1030-32, -3 | |
| | 18-8899-06 | Fan motor | 230/50 | MC1030-6 | |
| 2 | 18-8900-01 | Fan blade | - | MC1030 | |
| 3 | A38655-001 | Fan motor bracket | | MC1030 | |
| 4 | A39609-001 | Fan shroud | | MC1030 | |
| 5 | A39610-001 | Fan shroud top | | MC1030 | |
| 6 | A40420-001 | Utility channel | | MC0830-1030 | |

# MC0330, MC0530, MC0630, MC0830, MC1030 Service Parts

## Air Cooled Refrigeration System

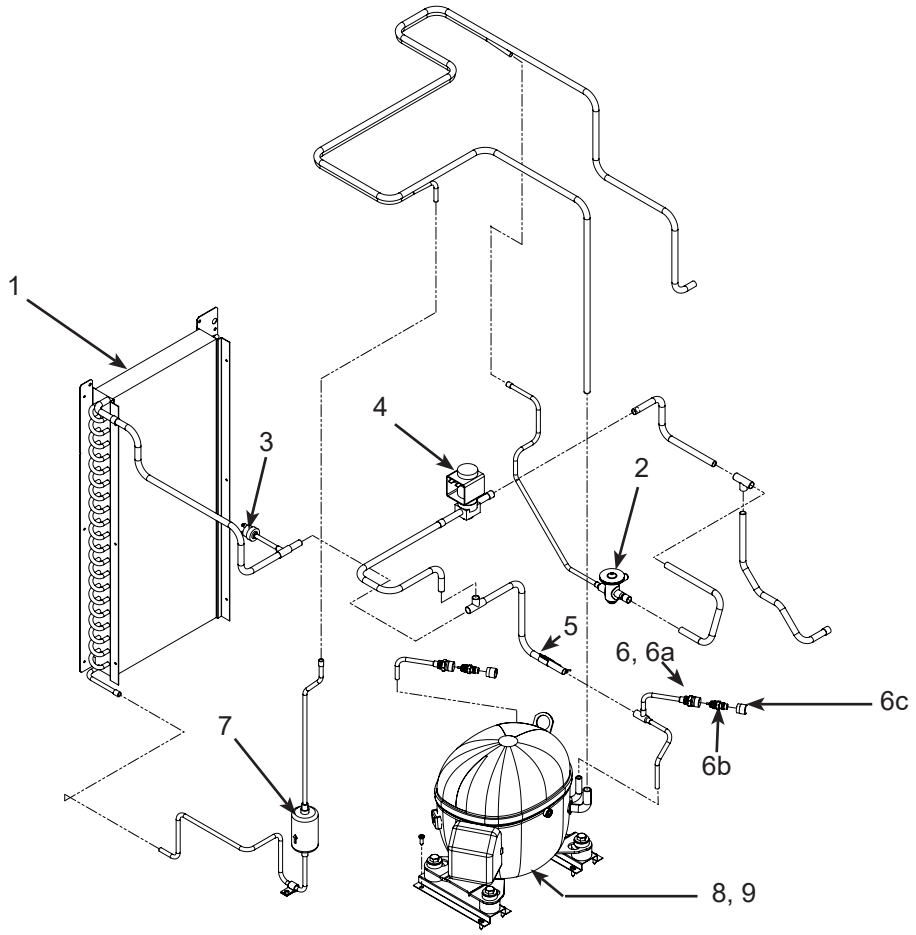


| Item Number | Part Number | Description |
|---|---|---|
| 1 | 18-8890-01 | Condenser, AC, 0330 |
| | 18-8935-01 | Cond, AC, 0530 |
| | 18-8936-01 | Condenser, AC, 0630 |
| | 18-8895-01 | Condenser, AC, 0830, 1030 |
| 2 | 16-1183-02 | TXV, 0330 |
| | 16-1184-01 | TXV, 0530 |
| | 16-1182-01 | TXV, 0630 |
| | 16-1142-01 | TXV, 0830 |
| | 16-1130-01 | TXV, 1030 |
| | 19-0599-06 | Insulation, TXV |
| 3 | 11-0566-21 | Fan cycle pressure sw. |
| 4 | 11-0493-02 | Hot gas valve, 115 volt |
| | 12-2719-21 | 115 volt coil |
| | 11-0493-01 | Hot gas valve, 230 volt |
| | 12-2719-22 | 230 volt coil |
| | 12-2733-30 | HGV rebuild kit |
| 5 | 11-0515-21 | Thermistor |
| 6 | 16-1137-01 | 3/8” Valve body |
| 6a | 16-1138-01 | 1/4” Valve body |
| 6b | 16-1139-01 | Core |
| 6c | 16-1140-01 | Cap |
| 7 | 02-3319-01 | Dryer 0330 thru 0630 |
| | 02-3319-02 | Dryer 0830 & 1030 |
| 8 | see page 15 | Compressors |
| 9 | see page 15 | Compressor mounting hdw |

# MC0330, MC0530, MC0630, MC0830, MC1030 Service Parts

## Water Cooled Refrigeration System MC0330 thru MC0830

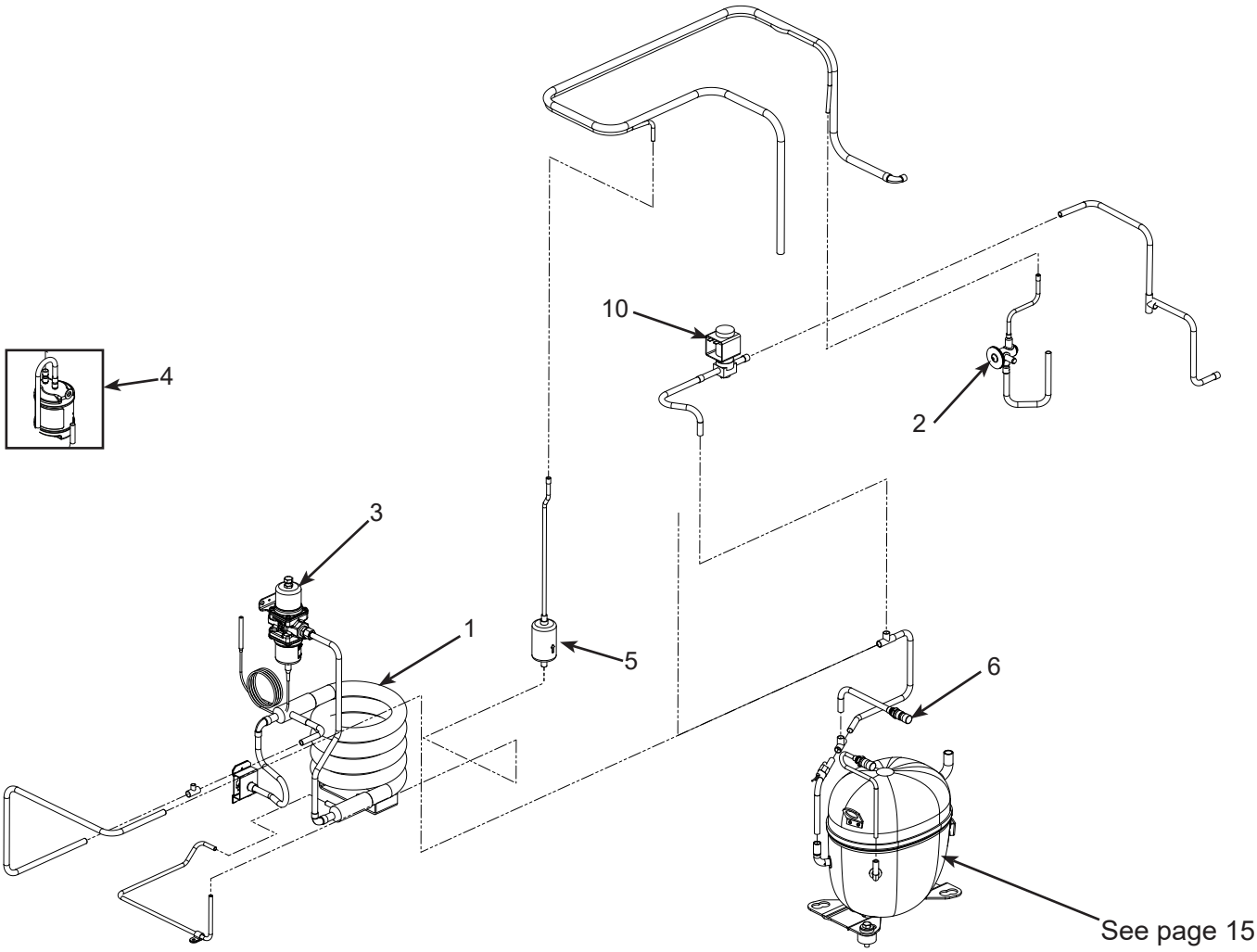


| Item Number | Part Number | Description |
|---|---|---|
| 1 | 18-8871-21 | Condenser, WC, 0330, 0530, 0630, 0830 |
| 2 | 16-1184-01 | TXV, 0530 |
| | 16-1182-01 | TXV, 0630 |
| | 16-1183-02 | TXV, 0330 |
| | 16-1142-01 | TXV, 0830 |
| | 19-0599-06 | Insulation TXV |
| 3 | 11-0608-21 | Water regulating valve |
| 4 | 16-0840-01 | MC0830 receiver |
| 5 | 02-3319-01 | Dryer, 0330 thru 0630 |
| | 02-3319-02 | Dryer, 0830 |
| 6 | 16-1137-01 | Valve body 3/8” |
| 6a | 16-1138-01 | Valve body 1/4” |
| | 16-1139-01 | Core |
| | 16-1140-01 | Cap |
| 10 | 11-0501-21 | High pressure cut out MC0830 |
| 11 | 11-0493-02 | Hot gas valve, 115 volt |
| | 11-0493-01 | Hot gas valve, 230 volt |
| | 12-2719-22 | 230 volt coil |
| | 12-2733-30 | HGV rebuild kit |

# MC0330, MC0530, MC0630, MC0830, MC1030 Service Parts

## Water Cooled Refrigeration System MC1030

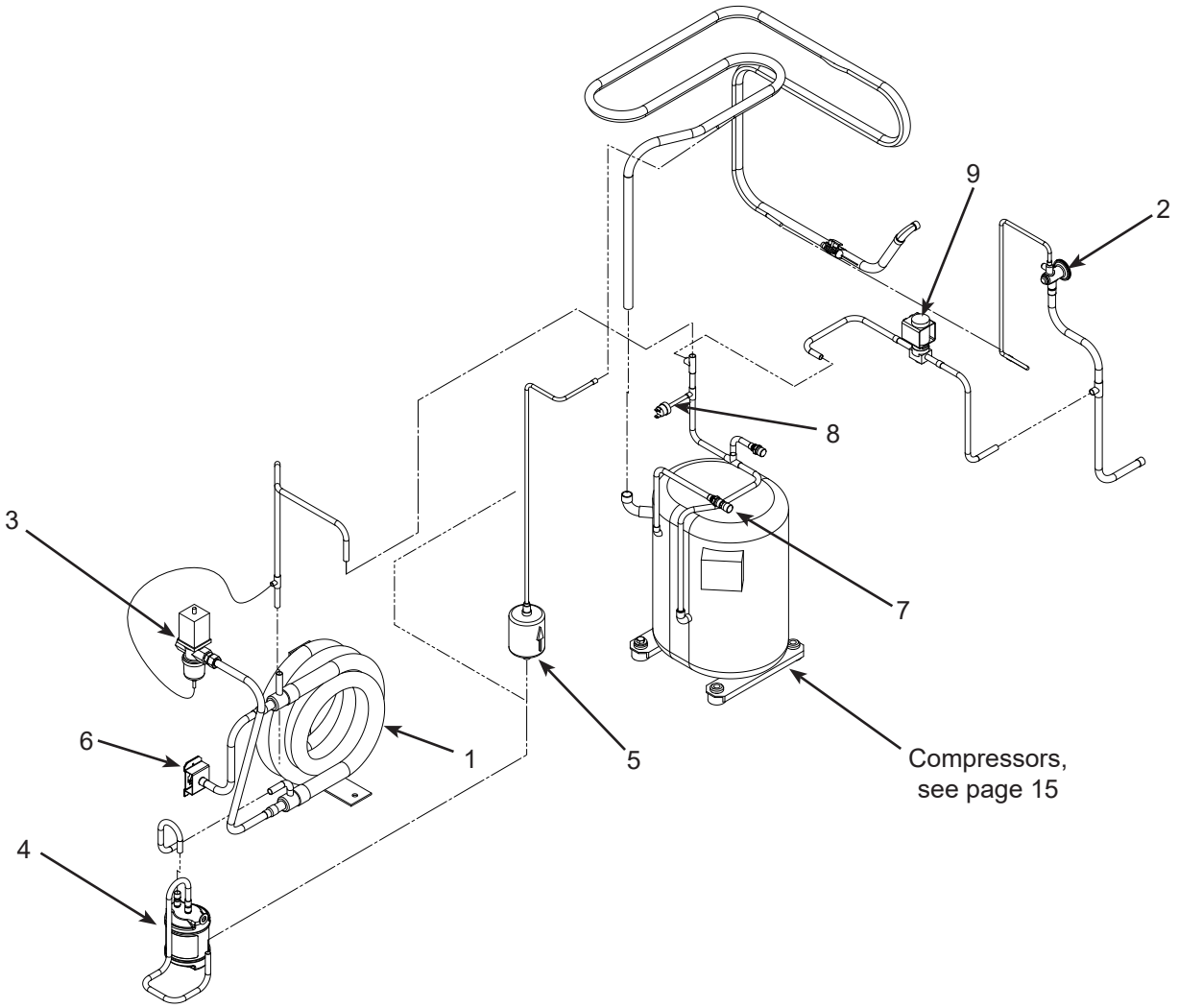


| Item Number | Part Number | Description |
|---|---|---|
| 1 | 18-8893-21 | Condenser, WC, 1030 |
| 2 | 16-1130-01 | TXV 1030 |
| | 19-0599-06 | Insulation TXV |
| 3 | 11-0608-21 | Water regulating valve |
| 4 | 16-0874-01 | Receiver, 830, 1030 |
| 5 | 02-3319-02 | Dryer, 1030 |
| 6 | A31828-002 | Condenser drain |
| 7 | 16-1137-01 | Valve body 3/8” |
| 7a | 16-1138-01 | Valve body 1/4” |
| | 16-1139-01 | Core (for item #7) |
| | 16-1140-01 | Cap (for item #7) |
| 8 | 11-0501-21 | High pressure cut out |
| 9 | 11-0493-01 | Hot gas valve, 230 volt |
| | 12-2719-22 | 230 volt coil |
| | 12-2733-30 | HGV rebuild kit |

# MC0330, MC0530, MC0630, MC0830, MC1030 Service Parts

## Water or Remote Cooled Back Panel

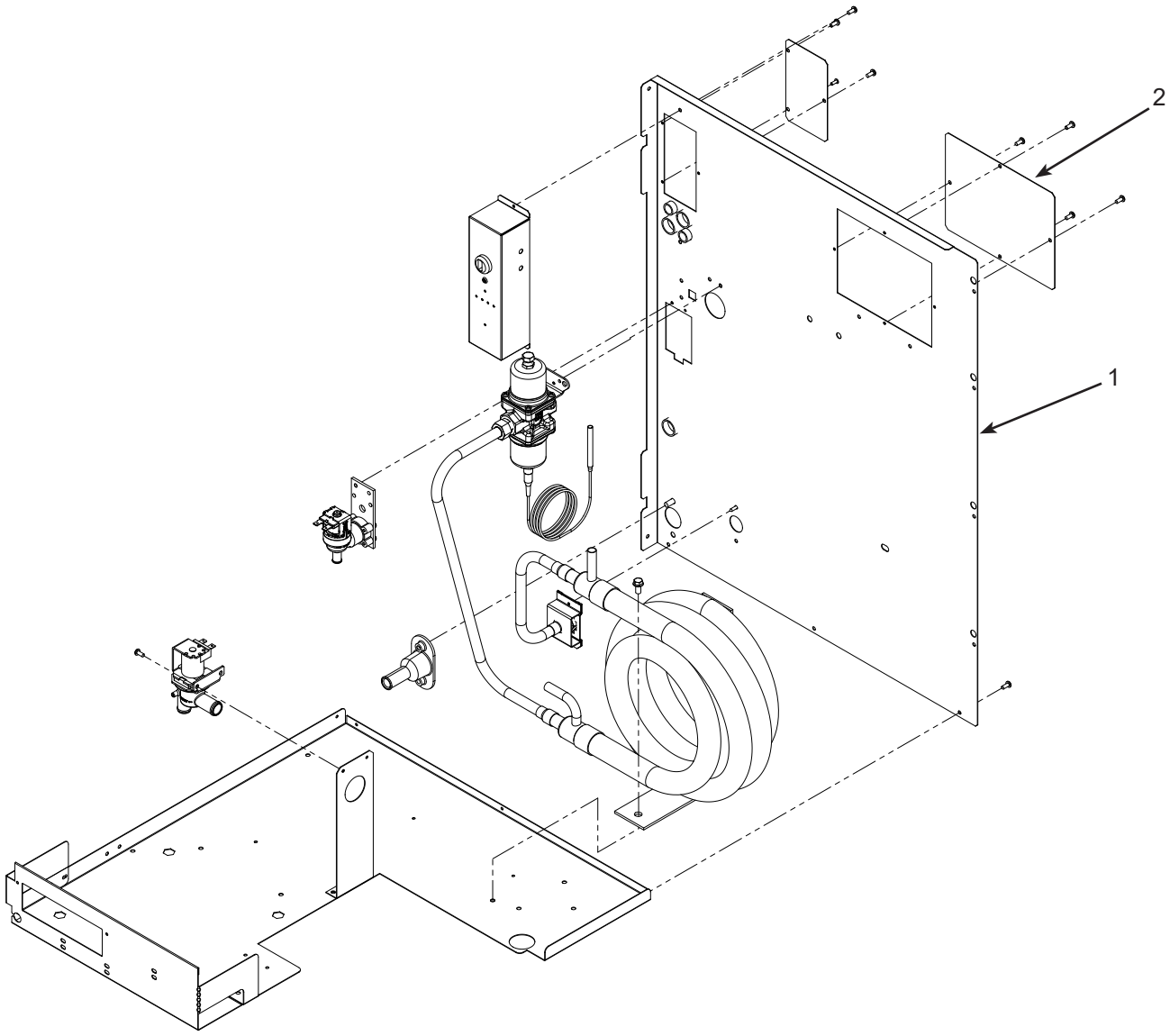


| Item Number | Part Number | Description |
|---|---|---|
| 1 | A40515-001 | Back pnl, WC, RC - 0330, 0530, 0630, |
| | A40654-001 | Back pnl. cover WC |
| | A40522-001 | Back pnl, WC, RC 0830 |
| | A40522-001 | Back pnl, WC, RC 1030 |
| | A40416-001 | Back pnl, RC - D series, 23” |
| 2 | A40654-001 | Cover, water cooled models |

# MC0330, MC0530, MC0630, MC0830, MC1030 Service Parts

## Remote Refrigeration System

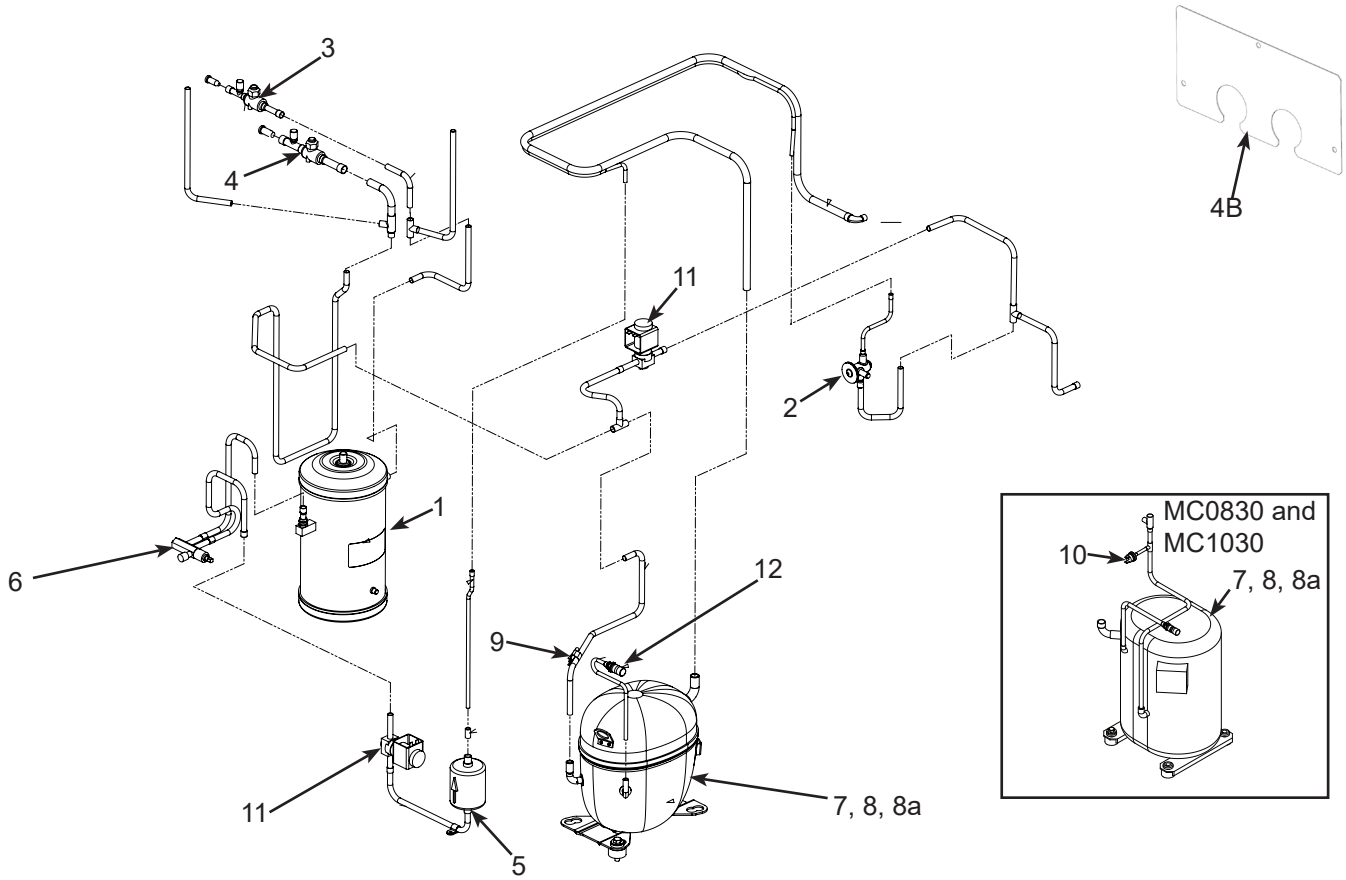


| Item Number | Part Number | Description |
|---|---|---|
| 1 | 16-1176-01 | Receiver, 0530, 0630 |
| | 16-1175-01 | Receiver, 0830, 1030 |
| 2 | 16-1184-01 | TXV, 0530 series |
| | 16-1182-01 | TXV, 0630 |
| | 16-1142-01 | TXV, 0830 |
| | 16-1130-01 | TXV, 1030 |
| | 19-0599-06 | Insulation, TXV |
| 3 | 16-1208-02 | Discharge Isolation valve |
| 4 | 16-1208-01 | Liquid Isolation valve |
| 4a | A40508-001 | Cover Isolation valves |
| 5 | 02-3319-02 | Drier |
| 6 | 16-1030-01 | Liquid line access valve |
| 7 | see page 15 | Compressors |
| 8 | see page 15 | Compressor mounting hdw |
| 8a | see page 15 | Crankcase heater |
| 9 | 11-0515-21 | Thermistor |
| 10 | 11-0501-22 | High pressure cut out 1030 |
| 11 | 11-0493-02 | Liquid line vlv or HGV, 115 v |
| | 11-0493-01 | Liquid line vlv or HGV, 230 v |
| 12 | 16-1137-01 | 3/8” Valve body |
| 12a | 16-1138-01 | 1/4 Valve body |
| Not Illustrated | 16-1140-01 | Cap (for #12) |
| | 16-1139-01 | Core (for #12) |
| | A37211-001 | Top receiver bracket |
| | A37212-001 | Bottom receiver bracket |
| | A40507-001 | Isolation Valve bracket |

# MC0330, MC0530, MC0630, MC0830, MC1030 Service Parts

## Electrical and Control Box

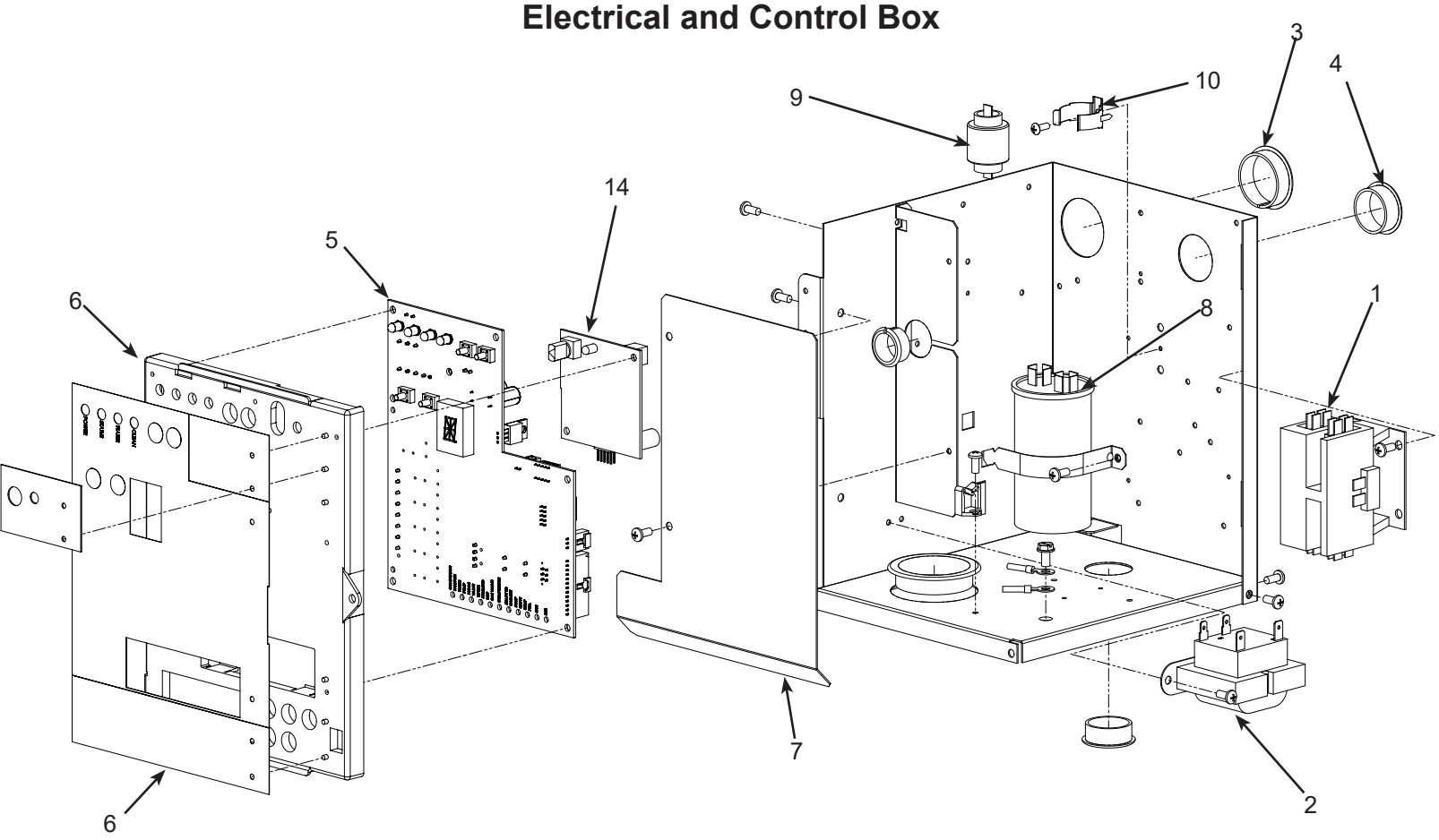


| Item Number | Part Number | Description |
|---|---|---|
| 1 | 12-2469-03 | Contactor, 115 volt |
| | 12-2469-02 | Contactor, 230, single ph |
| | 12-2533-02 | Contactor, three phase |
| 2 | 12-2924-01 | Transformer, 115 volt |
| | 12-2924-02 | Transformer, 230 volt |
| 3 | 12-1213-11 | Snap bushing |
| 4 | 12-1213-15 | Snap bushing |
| 5 | 11-0662-21 | Controller for MC cubers |
| 6 | 02-5168-01 | Control box door |
| | 02-5166-01 | Overlay label |
| 7 | A39216-001 | Barrier |
| 8 | see next page Run capacitor | |
| 9 | see next page PTCR - | |
| 10 | 18-8835-02 | Bracket |
| Wiring Harnesses (not illustrated) | | |
| 11 | 12-2931-01 | Power harness, A & W |
| | 12-2931-02 | Power harness, Remote |
| Power harness connects to J1 on controller | | |
| 12 | 12-2932-01 | Hi voltage harness, A & W |
| | 12-2933-01 | Hi voltage harness, Rem |
| Hi voltage harness has the 8 pin connector | | |
| 13 | 12-3185-02 | WLS harness |
| 14 | KVS | Vari-smart ice level control |
| 15 | KSBU-N | |

# MC0330, MC0530, MC0630, MC0830, MC1030 Service Parts

## Compressors

| Model | Series | Electrical | Compressor | Overload | Run Capacitor | PTCR |
|---|---|---|---|---|---|---|
| MC0330-1 | | 115/60/1 | 18-8948-21 | 18-8948-50* | 18-1902-64* | 18-8835-01* |
| MC0330-32 | | 208-230/60/1 | 18-8948-23 | 18-8948-51* | 18-1902-30* | 18-8835-01* |
| MC0530-1 | | 115/60/1 | 18-8948-21 | 18-8948-50* | 18-1902-64* | 18-8835-01* |
| MC0530-32 | | 208-230/60/1 | 18-8948-23 | 18-8948-51* | 18-1902-30* | 18-8835-01* |
| MC0530-6 | | 230/50 | 18-8948-22 | 18-8948-51* | 18-1902-65* | 18-8835-01* |
| MC0630-32 | | 208-230/60/1 | 18-8955-22 | internal | 18-1902-67* | 18-8835-01* |
| MC0630-6 | | 230/50 | 18-8990-06 | internal | 18-1902-63* | 18-8835-01* |
| MC0830-32 | | 208-230/60/1 | 18-8813-23 | internal | 18-1902-69* | 18-8835-01* |
| MC0830-3 | | 208-230/60/3 | 18-8813-25 | internal | - | - |
| MC0830-6 | | 230/50 | 18-8813-27 | internal | 18-1902-69* | 18-8835-01* |
| MC1030-32 | | 208-230/60/1 | 18-8726-23 | internal | 18-1902-69* | 18-8835-01* |
| MC1030-3 | | 208-230/60/3 | 18-8726-25 | internal | - | - |
| MC1030-6 | | 230/50 | 18-8726-15 | | 18-1902-69 | 18-8835-01 |

* Replacement compressors include selected components and a filter dryer. They may also include other components used only on other models. CS type compressors include fittings to adapt to prior tubing sizes.

# MC0330, MC0530, MC0630, MC0830, MC1030 Service Parts

## Compressor Mounting Hardware / Crankcase Heater

| Model | Series | Bolt | Washer | Grommet | Sleeve |
|---|---|---|---|---|---|
| MC0330 | | 03-1405-20 | 03-1407-07 | 18-4700-28 | 18-0108-41 |
| MC 0330 or 0530 | | 03-1405-20 | 03-1407-07 | 18-2200-28 | 18-2200-27 |
| MC0630 | | 03-1405-20 | 03-1407-07 | 18-2200-28 | 18-2200-27 |
| MC0830 or 1030 | | 03-1405-20 | 03-1407-07 | 18-2300-27 | 18-2300-26 |

| Model | | Crankcase heater | |
|---|---|---|---|
| MC0530R | | 12-3043-01 | |
| MC0630R | | 12-3043-02 | |
| MC0830R or MC1030R | | 12-3043-03 | |
| MC1030R | | 12-1868-05 external | |

* Replacement compressors include selected components and a filter dryer. They may also include other components used only on other models. CS type compressors include fittings to adapt to prior tubing sizes.

# MC0330, MC0530, MC0630, MC0830, MC1030 Service Parts

## Remote Condenser, ERC111, ERC211 and ERC311

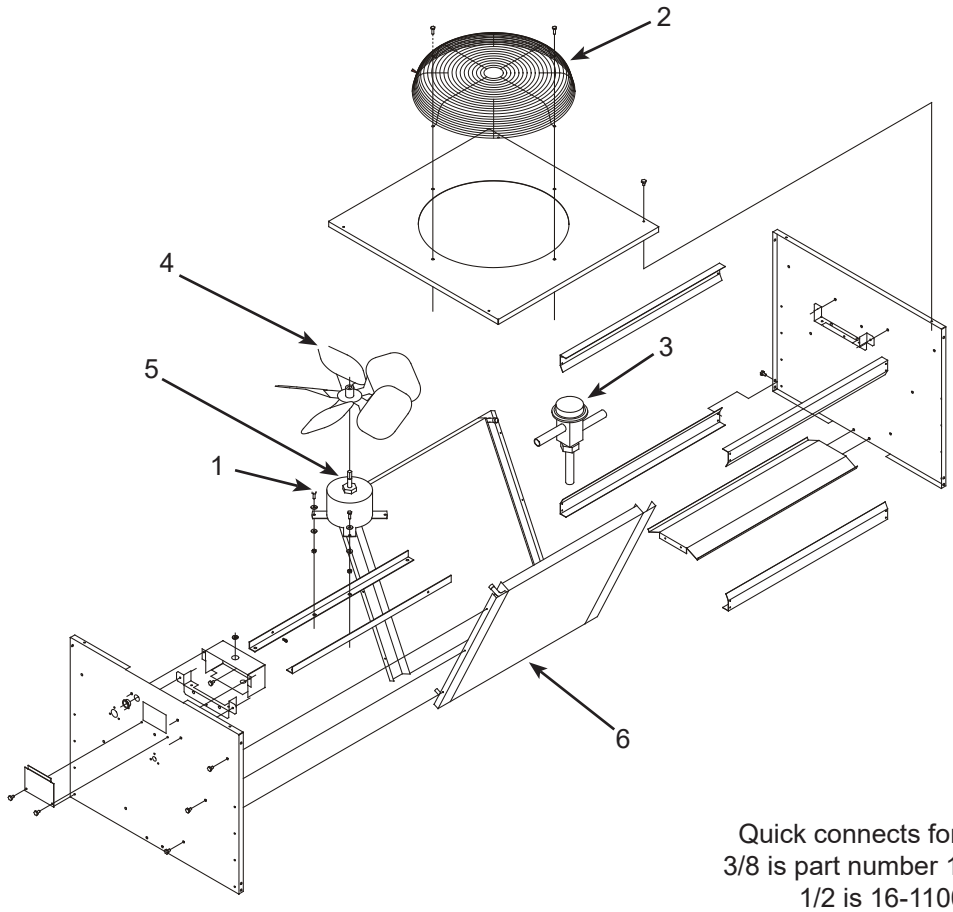


Quick connects for line sets:
3/8 is part number 16-1100-08;
1/2 is 16-1100-09.

| Item Number | Part Number | Description |
|---|---|---|
| 1 | 03-1405-08 | Screw |
| 2 | 02-3575-01 | Fan guard |
| 3 | 11-0422-22 | Headmaster |
| 4 | 18-8816-01 | Fan blade |
| 5 | 12-2651-01 | Fan motor - 230 volt (ERC311) |
| | 12-2651-02 | Fan motor - 115 volt (ERC111 and ERC211) |
| 6 | 18-8815-01 | Coil, ERC111 |
| | 18-8827-01 | Coil, ERC311 |
| Not Shown: | | |
| | A37169-001 | Leg |
| | A37170-001 | Leg brace |
| | 03-1645-01 | Screw for legs |
| | 16-0850-01 | Quick connect, discharge |
| | 16-0850-03 | Quick connect, liquid |

# MC0330, MC0530, MC0630, MC0830, MC1030 Service Parts

## Wiring Diagram MC0330, MC0530 or MC0630

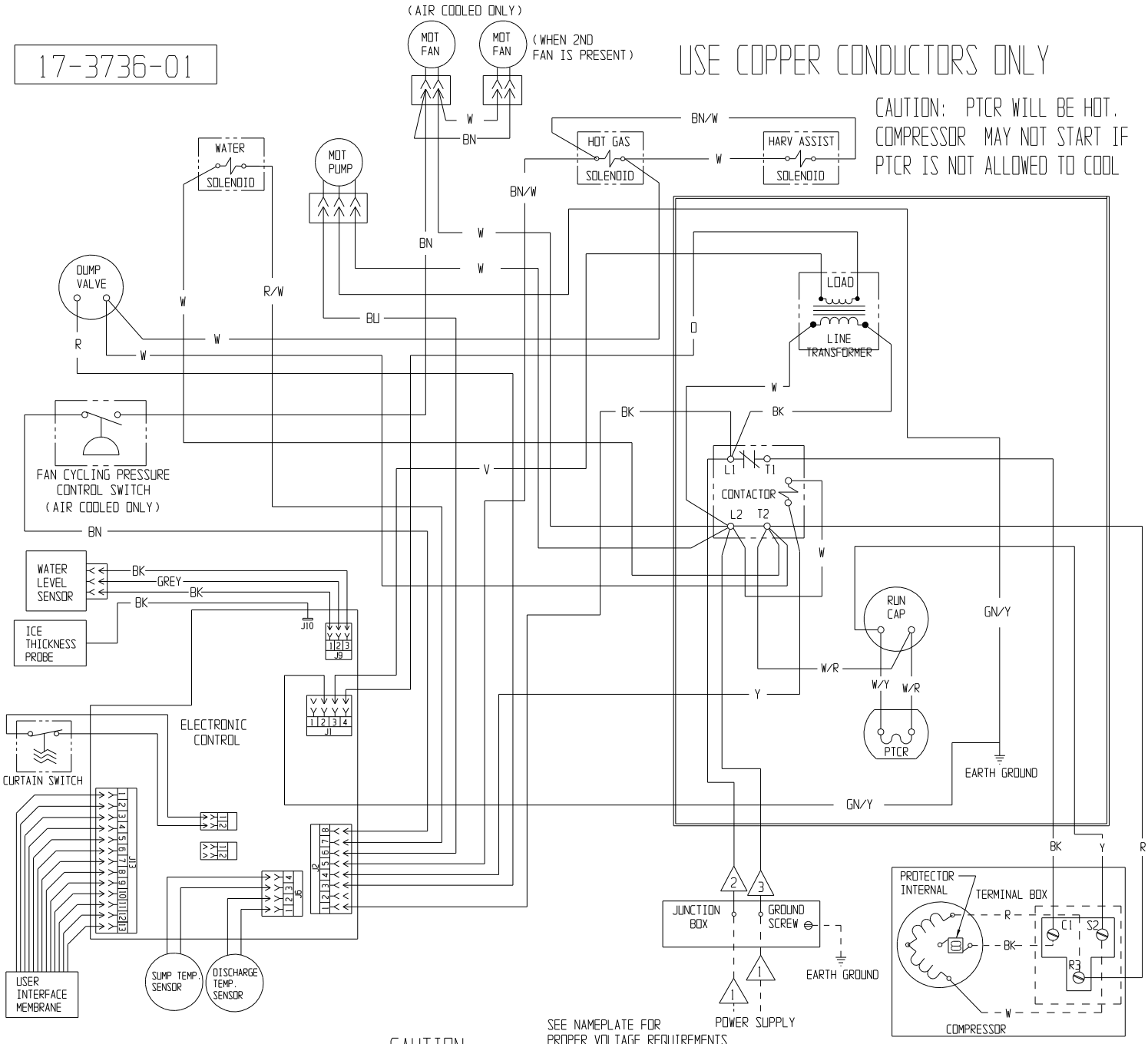


CAUTION: MORE THAN ONE DISCONNECT MEANS MAY BE REQUIRED TO DISCONNECT ALL POWER TO THIS UNIT.

THIS UNIT MUST BE GROUNDED.

3 WIRE COLOR FOR 115/60/1 UNITS: WHITE
WIRE COLOR FOR 208-230/60/1 EXCEPT CR UNITS: BLACK W/WHITE STRIP
WIRE COLOR FOR ONLY CR0630 UNITS: BROWN

1 DASHED LINES INDICATE FIELD WIRING WHICH MUST BE INSTALLED IN ACCORDANCE WITH THE NATIONAL ELECTRICAL CODE AND ALL STATE AND LOCAL CODES.

2 WIRE COLOR FOR 208-230/60/1 AND 115/60/1 UNITS: BLACK

## Schematic Diagram MC0330, MC0530 or MC0630

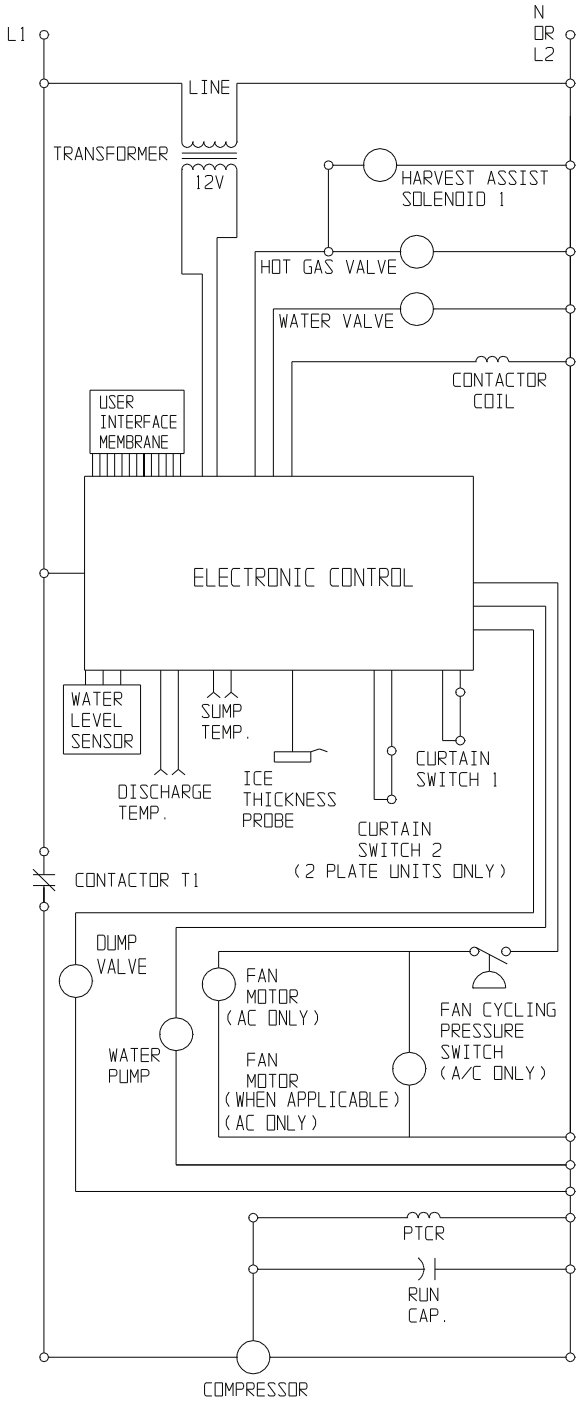

# MC0330, MC0530, MC0630, MC0830, MC1030 Service Parts

## Wiring Diagram MC0530R or MC0630R

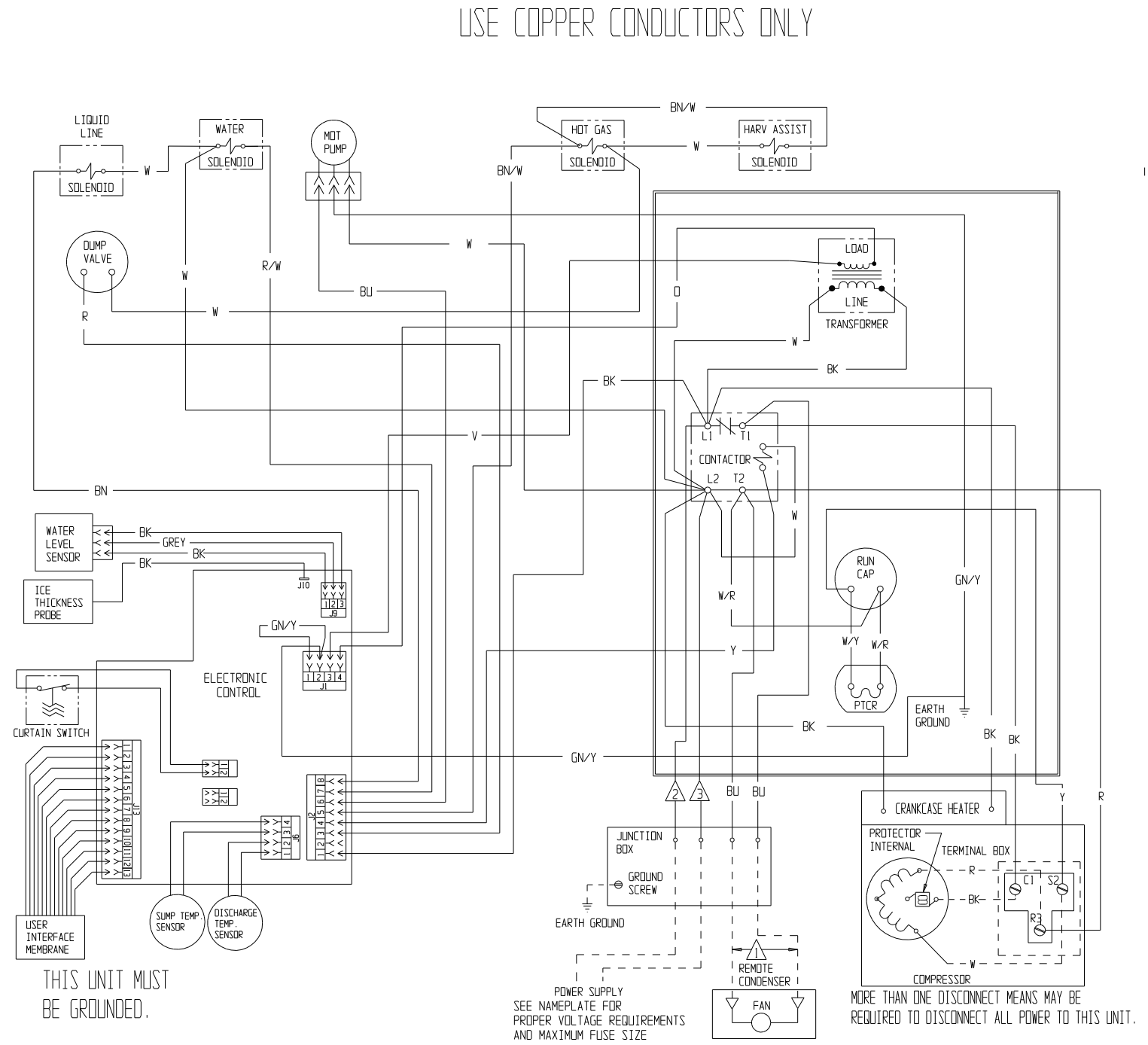


3 WIRE COLOR FOR 115/60/1 UNITS: WHITE
WIRE COLOR FOR 208-230/60/1 EXCEPT CR UNITS: BLACK W/WHITE STRIP
WIRE COLOR FOR ONLY CR0630 UNITS: BROWN

1 DASHED LINES INDICATE FIELD WIRING WHICH MUST BE INSTALLED IN ACCORDANCE WITH THE NATIONAL ELECTRICAL CODE AND ALL STATE AND LOCAL CODES.

2 WIRE COLOR FOR 208-230/60/1 AND 115/60/1 UNITS: BLACK

## Schematic Diagram MC0530R or MC0630R

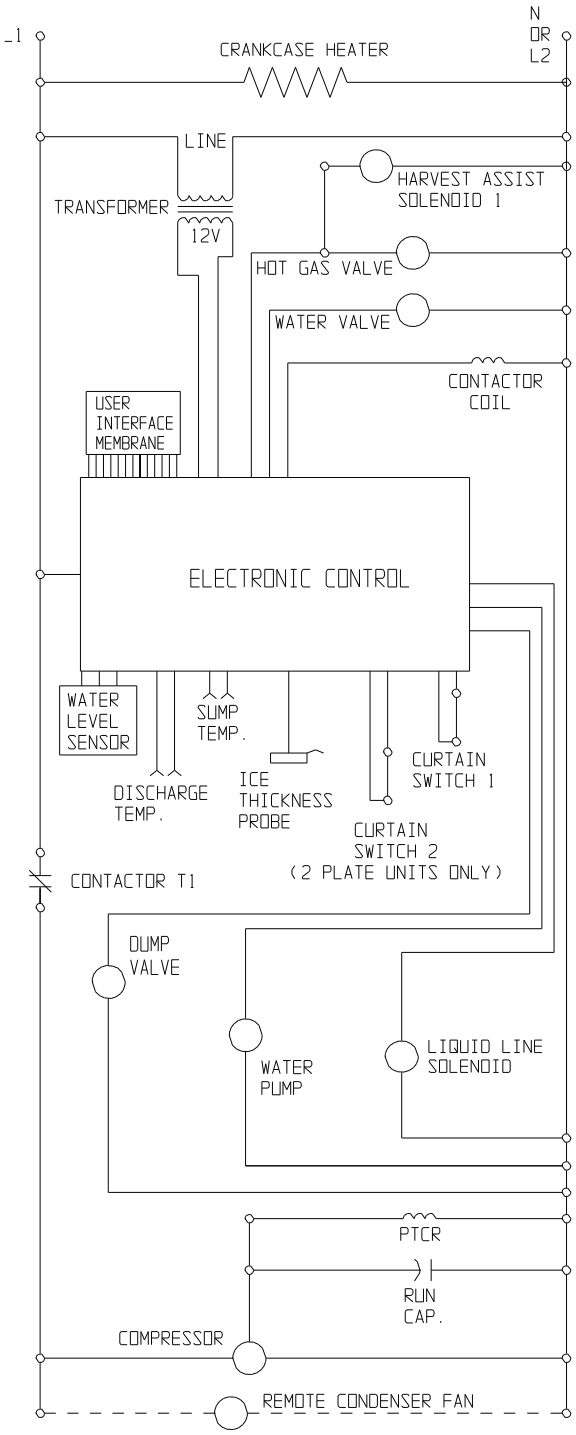

# MC0330, MC0530, MC0630, MC0830, MC1030 Service Parts

## Wiring Diagram MC0830 MC1030 Air or Water -32

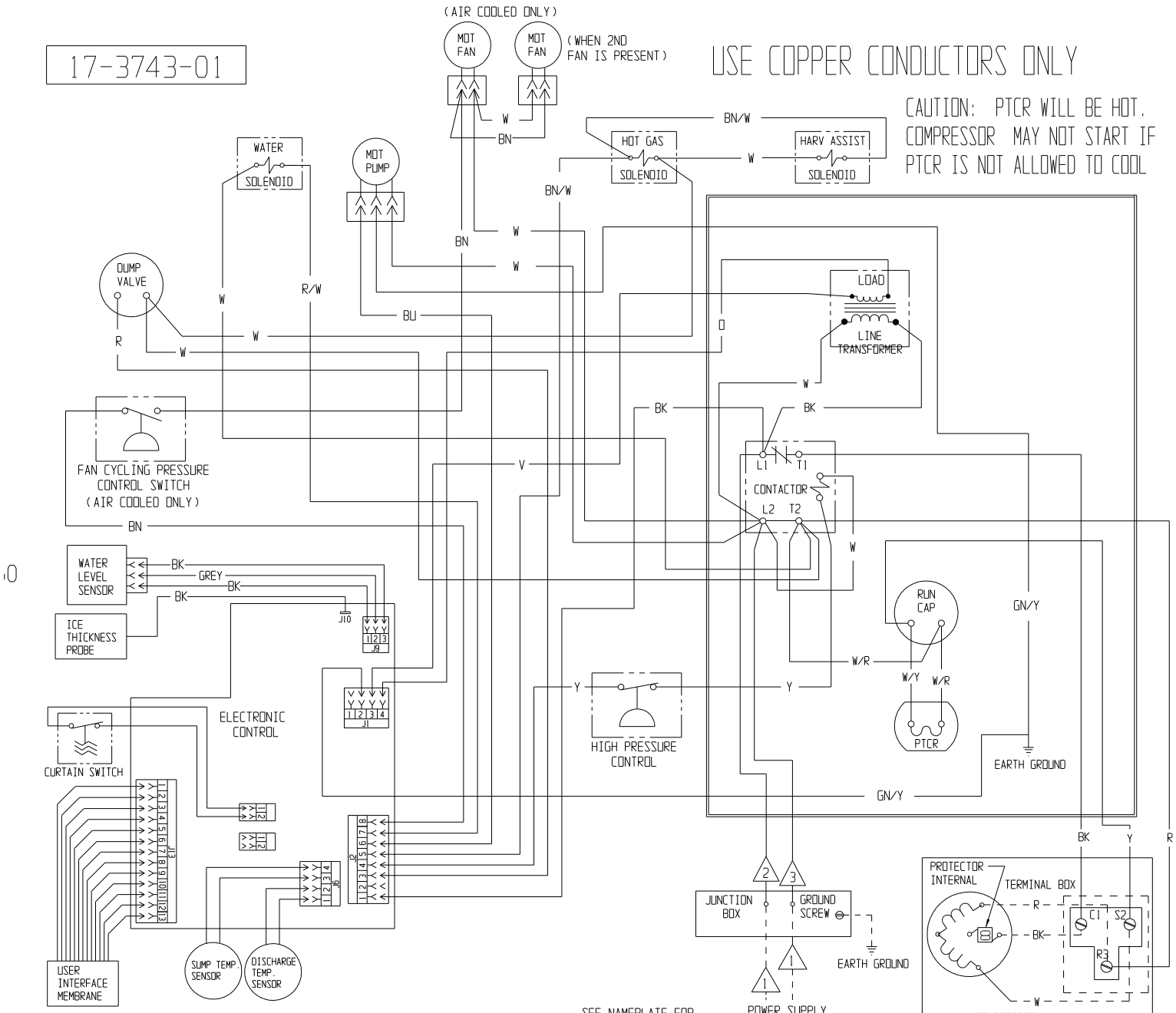

## Schematic Diagram MC0830 MC1030 Air or Water -32

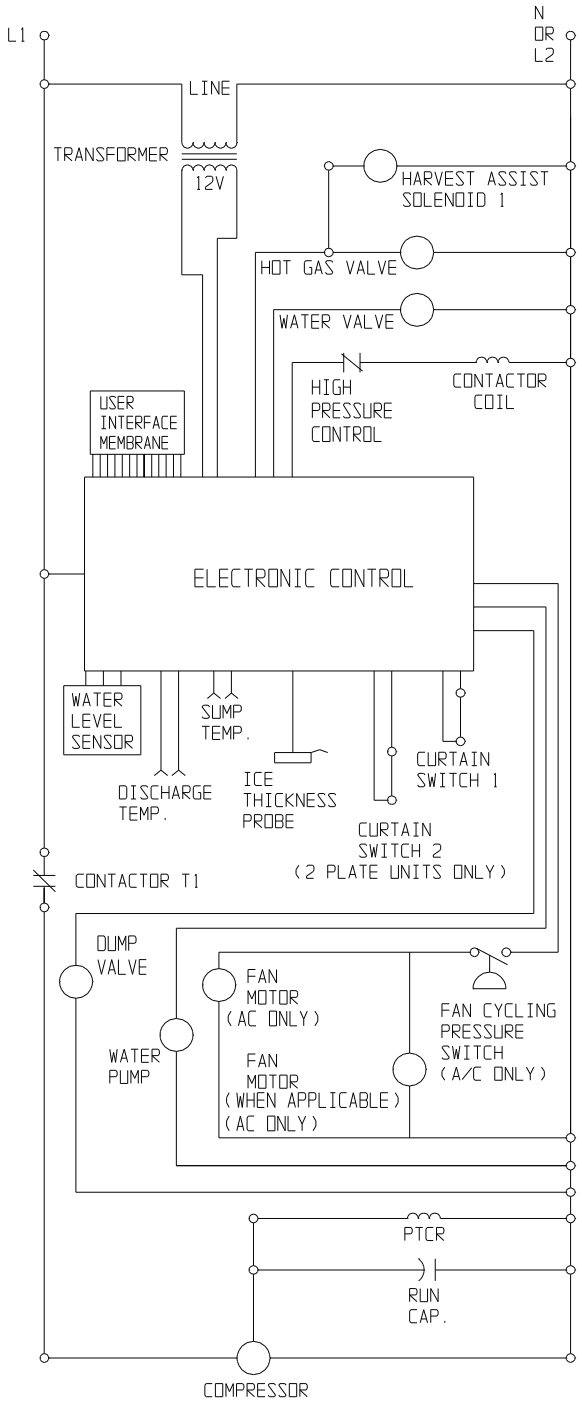

## Wiring Diagram MC0830, MC1030 Air or Water -3

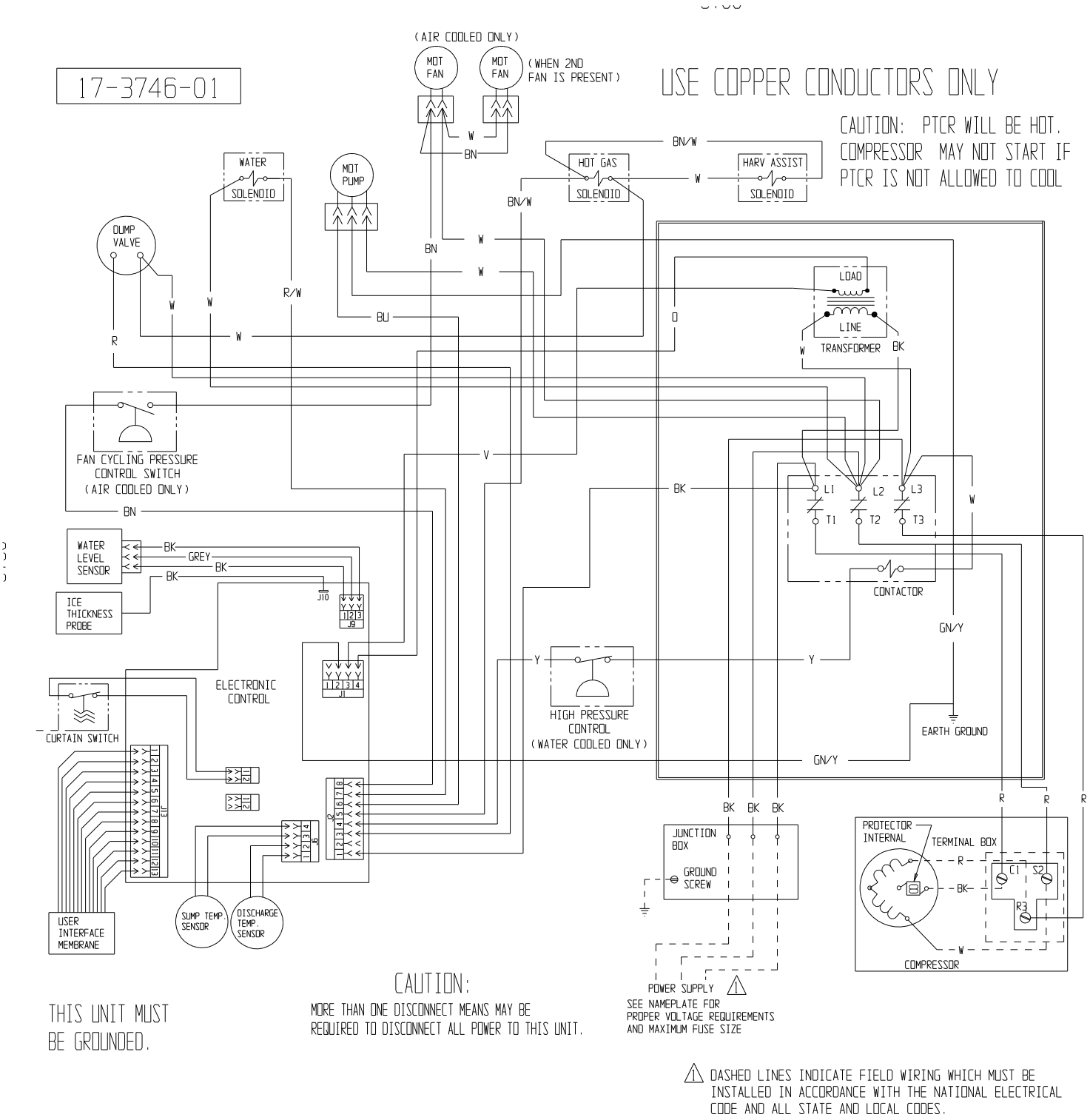

## Wiring Diagram MC0830, MC1030 Air or Water -3

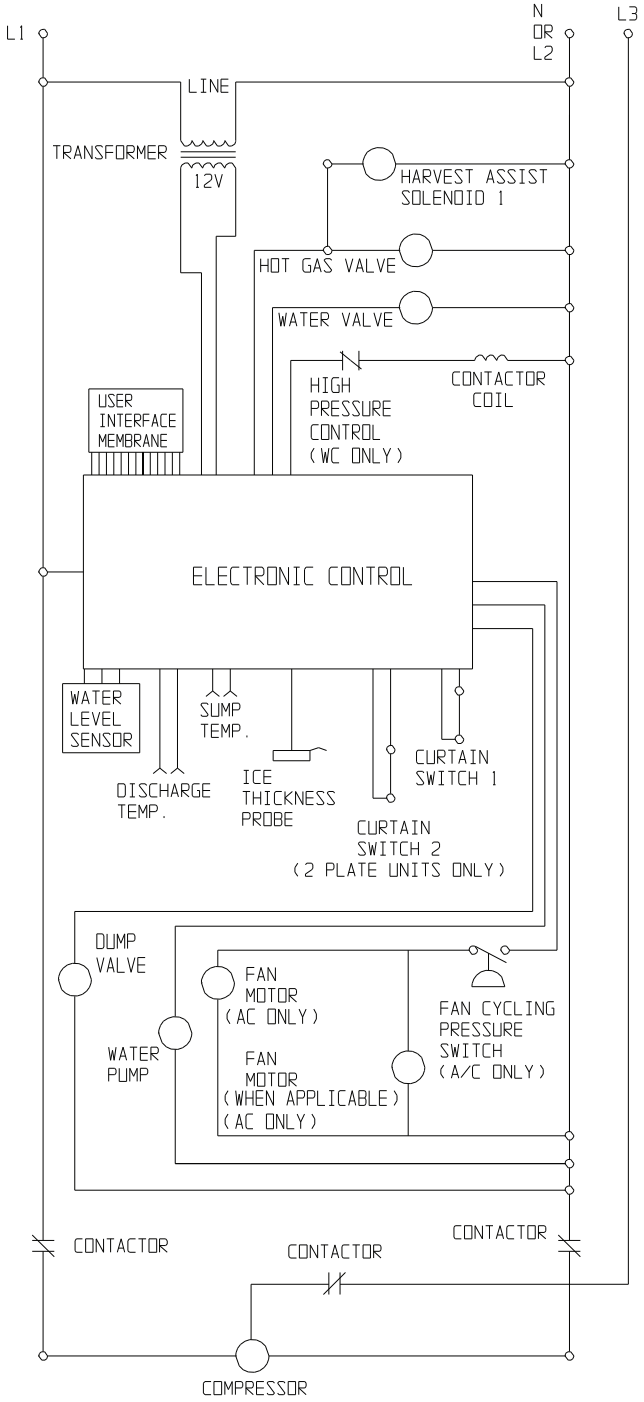

## Wiring Diagram MC0830, MC1030 Remote -3

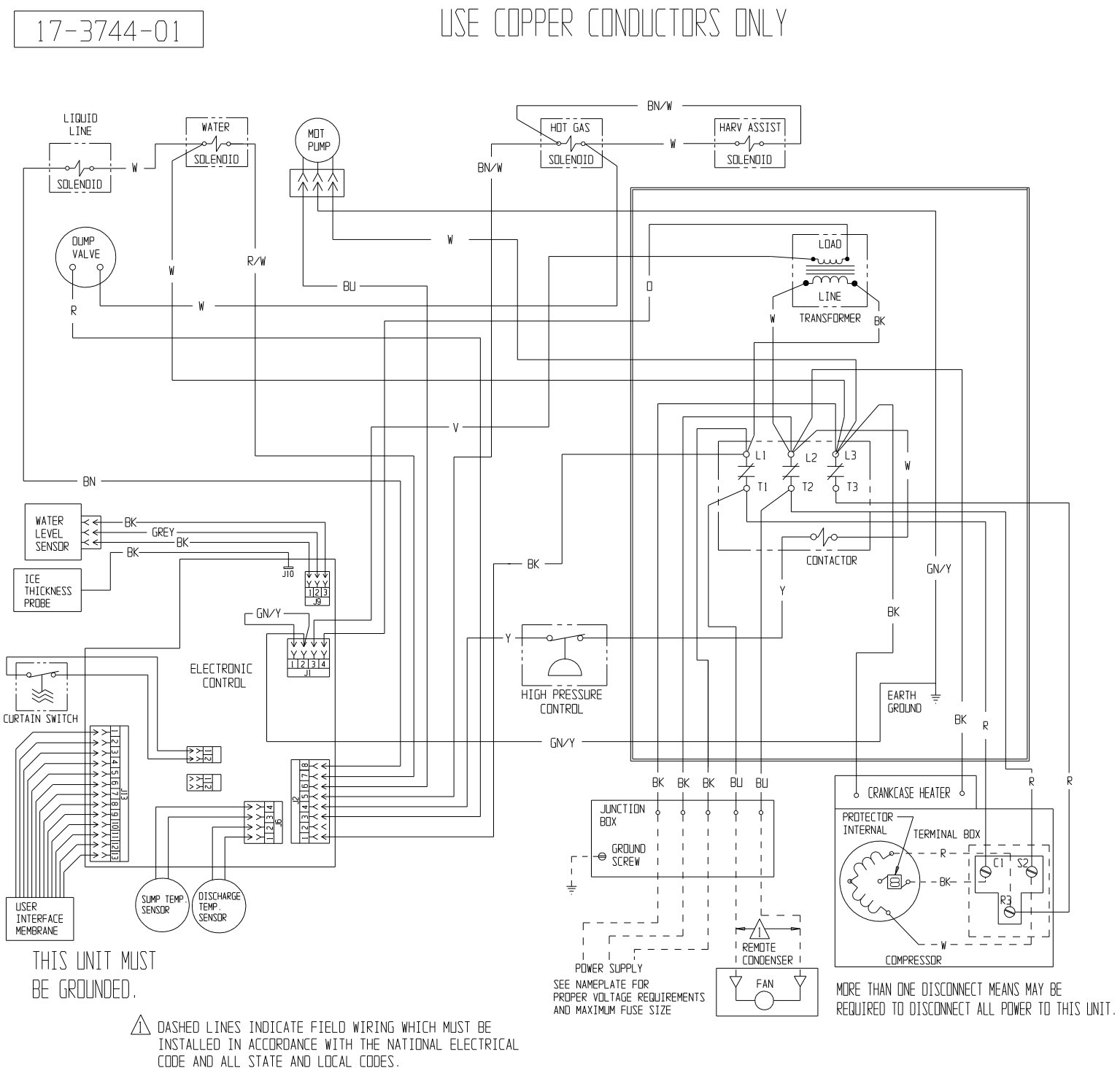

## Schematic Diagram MC0830, MC1030 Remote -3

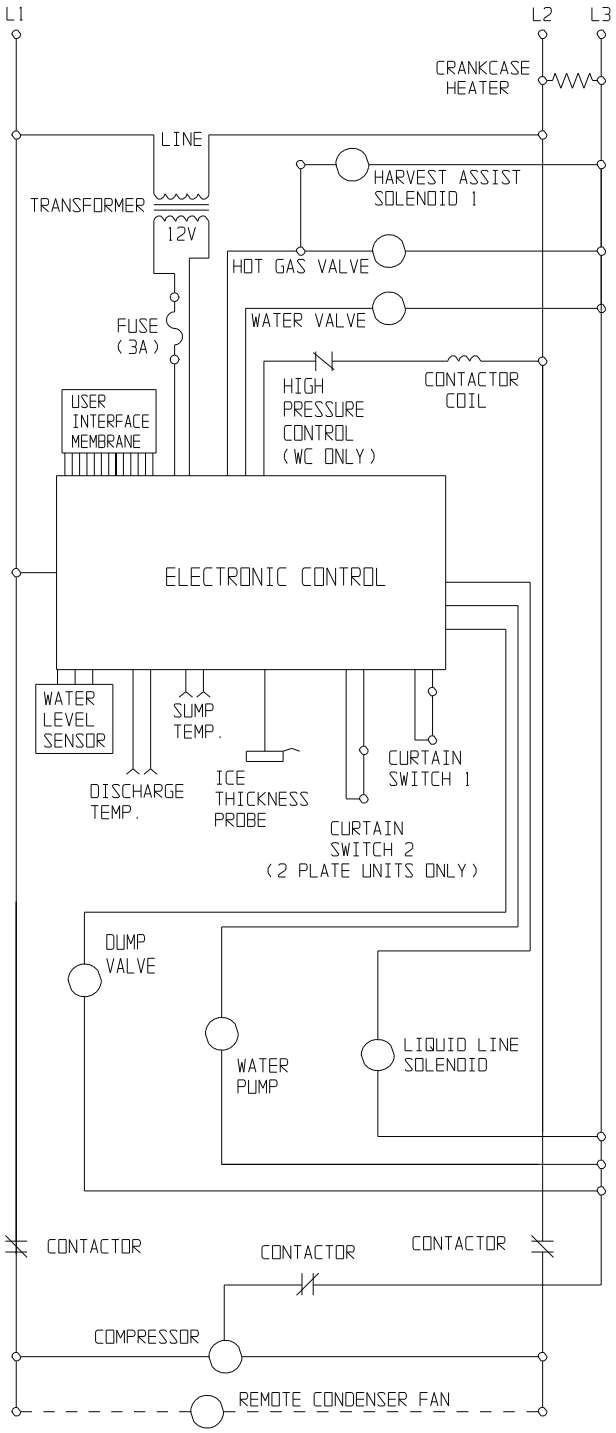

# MC0330, MC0530, MC0630, MC0830, MC1030 Service Parts

## Wiring Diagram MC0830, MC1030 Remote -32

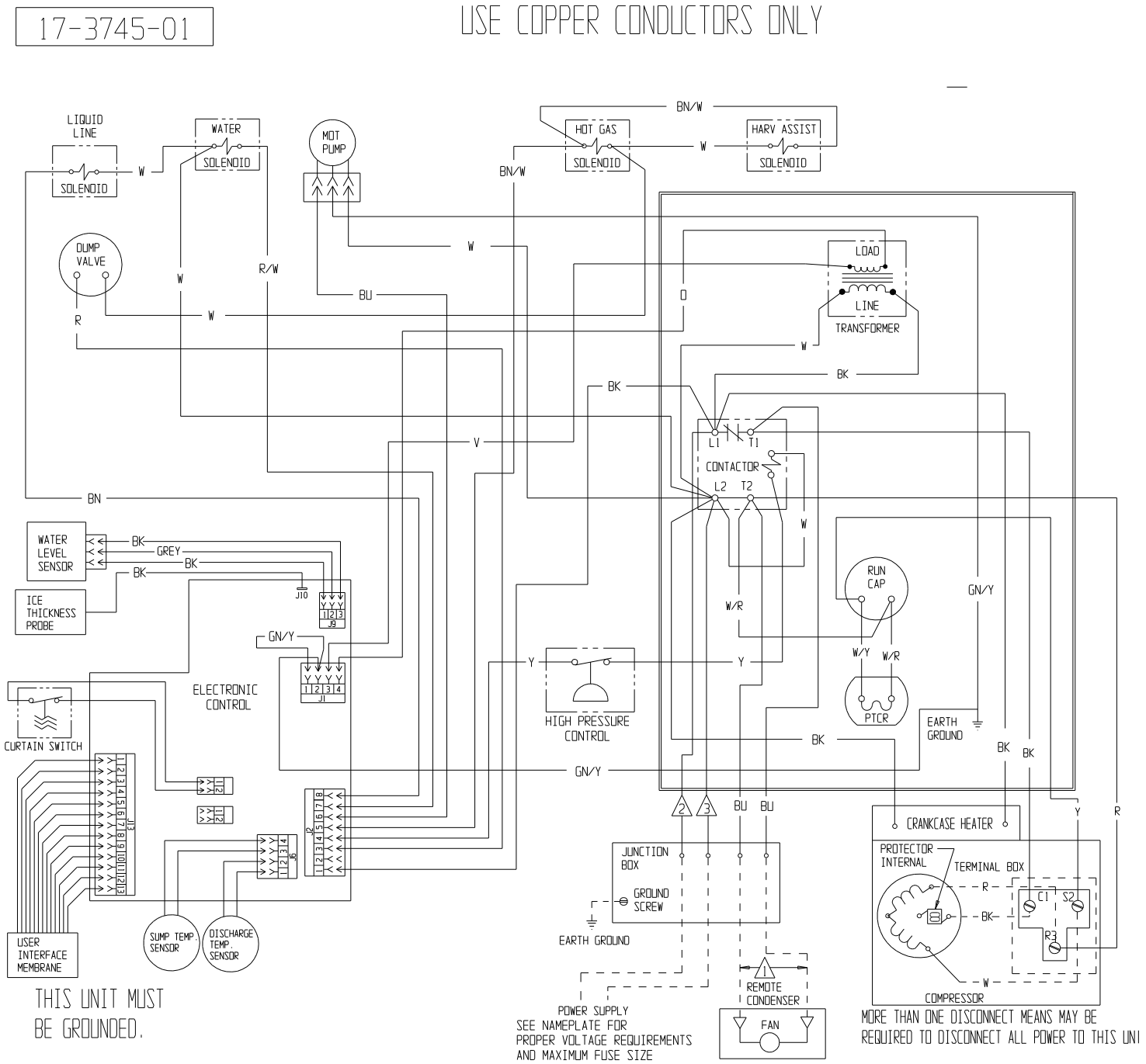
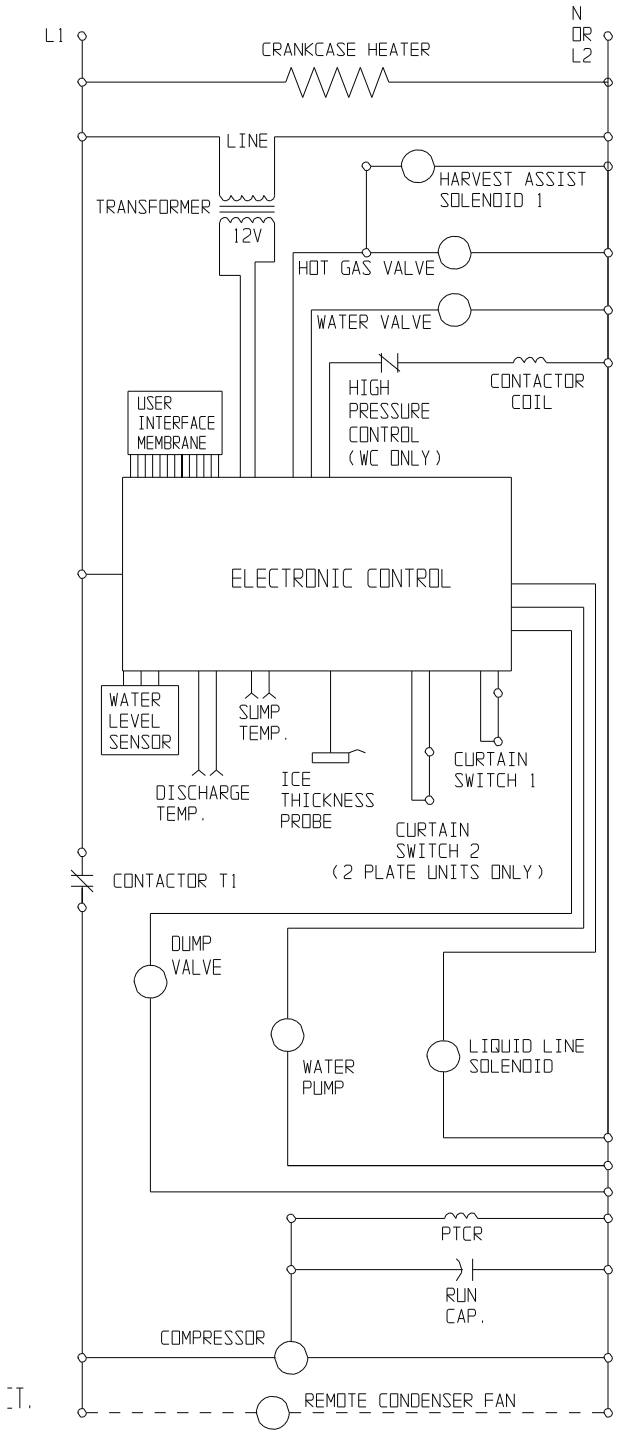
## Schematic Diagram MC0830, MC1030 Remote -32