IRSB
24”/36” SALAMANDER BROILER

IRSB-36

SPECIFICATIONS

IKON gas salamander broiler, Model IRSB-36 or IRSB-24. All 304 stainless steel exterior with a dedicated infrared burner for each 12” cooking zone. IRSB-24 with two independent 12” cooking infra-red burners each of 13,000 BTU’s. IRSB-36 with three independent 12” cooking infra-red burners each of 13,000 BTU’s. Enabled with a standing pilot ignition system. Equipped with a 4-positon spring-balanced rack. Cool to the touch knob on lever provides positive positioning of the broiler carriage. Heavy-duty Chrome plated broiling grid measures 27” x 13” deep. Removeable full width spillage pan. Includes non-skid SS legs for countertop operations, LP gas conversion kit, and ¾’ gas regulator.

SPECIFY TYPE OF GAS WHEN ORDERING. SPECIFY ALTITUDE WHEN ABOVE 4,000 FT.

OPTIONS

- IRSB-WMK for direct wall mounting under exhaust hood

Features

- All 304 stainless steel exterior
- Each 12” cook zone with its own infra-red burner of 13,000 BTU’s
- Standing pilot ignition system
- Full width broiler pan
- 3/4” rear gas connection with regulator
- 4-position adjustable spring balanced rack
- Ball grip handle on adjustable rack for ease and comfort
- LP gas conversion kit included as standard
- Ready to mount over any 24” range (24”Salamander) 36”,48”, 60” range (36”Salamander) Range Mount Kit included as standard.
- 4” adjustable height, non-skid SS Legs included for countertop operation
- SM-WMK for direct wall mounting under exhaust hood (option - accessory)
- SM24-RA or SM36-RA for direct gas range mounting under exhaust hood (option - accessory)

Specifications

Model	#of Burners	Total BTU	Overall Dimensions	Weight	Shipping Dimensions	Shipping Weight
IRSB-24	2	30,000	24 x 24.7 x 20.6	99 lbs.	27 x 26.4 x 26.6	138 lbs.
IRSB-36	3	45,000	36 x 24.7 x 20.6	128 lbs.	39 x 26.4 x 26.6	186 lbs.

3560 NW 56th Street
Fort Lauderdale, FL 33309
Tel.: 786.600.4687 / Toll Free: 844.218.8477

5659 Royalmount Avenue
Montreal, Qc, Canada H4P 2P9
Tel.: 514.737.9701 / Toll Free: 888.275.4538
Fax.: 514.342.3854 / Toll Free: 877.453.8832
sales@mvpgroup.com

MVP GROUP
www.mvpgroupcorp.com

IRSB
24″/36″ SALAMANDER BROILER

IRSB-24 **IRSB-36**

Front View

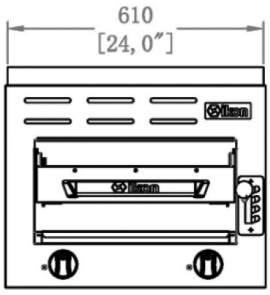

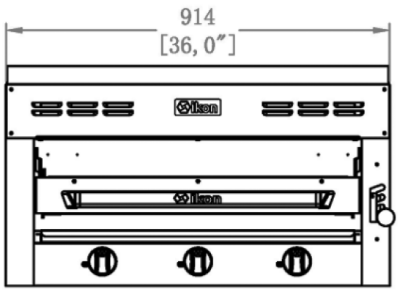

Top View

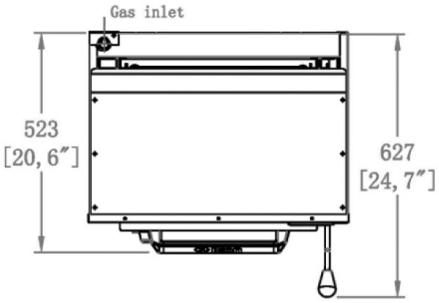

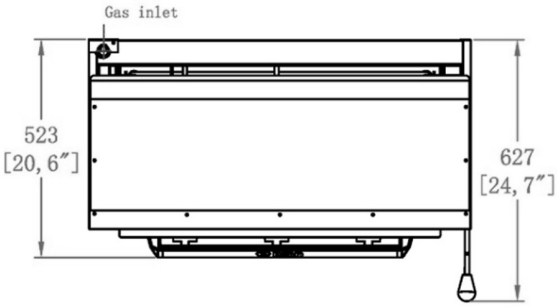

Side View

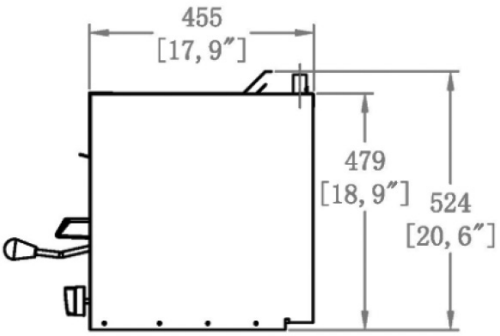

GAS REQUIREMENTS

- Natural gas operating pressure - 5.0″ W.C. Recommended supply pressure 7-9″ W.C.
- Propane gas operating pressure - 10.0″ W.C. Recommended supply pressure 11-12″ W.C.
- A gas pressure regulator supplied with unit must be installed.
- An adequate ventilation system is required for Commercial Cooking Equipment.
- Require a 6″ clearance at both side and rear adjacent to combustible construction.

3560 NW 56th Street
Fort Lauderdale, FL 33309
Tel.: 786.600.4687 / Toll Free: 844.218.8477

5659 Royalmount Avenue
Montreal, Qc, Canada H4P 2P9
Tel.: 514.737.9701 / Toll Free: 888.275.4538
Fax.: 514.342.3854 / Toll Free: 877.453.8832
sales@mvpgroup.com

www.mvpgroupcorp.com