Refrigerated Showcases

Models FR-CN-0005, 0009, 0014

Items 47742, 47743, 47744

Instruction Manual

STOP

DO NOT RETURN THIS PRODUCT TO THE STORE

For questions or assistance with this product call OMCAN Toll Free: 1 800 465 0234 Customer Service or visit the Support section of www.omcan.com

Revised - 07/09/2024

Intertek Intertek

Toll Free: 1-800-465-0234

Fax: 905-607-0234

Email: service@omcan.com

www.omcan.com

MADE IN CHINA

Table of Contents

Model FR-CN-0005 / Model FR-CN-0009 / Model FR-CN-0014

Section	Page
Disclaimer	3
General Information	4 - 5
Safety and Warranty	5 - 6
Technical Specifications	7
Installation	8 - 11
Operation	11 - 12
Maintenance	12
Troubleshooting	13
Parts Breakdown	14 - 19
Electrical Schematics	20 - 21
Notes	22
Warranty Registration	23

Disclaimer

OMCAN IS NOT RESPONSIBLE FOR DIMINISHED COOLING OR ANY DAMAGES DUE TO WATER LEAKS. WARRANTY FOR WATER LEAKS IS VOID IF THE AMBIENT ROOM TEMPERATURE EXCEEDS 75°F AND 55% RELATIVE HUMIDITY, AND THE APPLIANCE DRAIN IS NOT CONNECTED DIRECTLY TO A FLOOR DRAIN.

OMCAN N'EST PAS RESPONSABLE DE LA DIMINUTION DU REFROIDISSEMENT OU DE TOUT DOMMAGE DÛ À DES FUITES D'EAU. LA GARANTIE CONTRE LES FUITES D'EAU EST ANNULÉE SI LA TEMPÉRATURE AMBIANTE DE LA PIÈCE DÉPASSE 75 °F ET 55 % D'HUMIDITÉ RELATIVE ET QUE LE DRAIN DE L'APPAREIL N'EST PAS CONNECTÉ DIRECTEMENT À UN SIPHON DE SOL.

OMCAN NO ES RESPONSABLE DE LA DISMINUCIÓN DEL ENFRIAMIENTO NI DE NINGÚN DAÑO DEBIDO A FUGAS DE AGUA. LA GARANTÍA POR FUGAS DE AGUA QUEDA ANULADA SI LA TEMPERATURA AMBIENTE EXCEDE LOS 75 °F Y EL 55 % DE HUMEDAD RELATIVA, Y EL DRENAJE DEL ELECTRODOMÉSTICO NO ESTÁ CONECTADO DIRECTAMENTE A UN DRENAJE DEL PISO.

General Information

Omcan Manufacturing and Distributing Company Inc., Food Machinery of America, Inc. dba Omcan and Omcan Inc. are not responsible for any harm or injury caused due to any person's improper or negligent use of this equipment. The product shall only be operated by someone over the age of 18, of sound mind, and not under the influence of any drugs or alcohol, who has been trained in the correct operation of this machine, and is wearing authorized, proper safety clothing. Any modification to the machine voids any warranty, and may cause harm to individuals using the machine or in the vicinity of the machine while in operation.

CHECK PACKAGE UPON ARRIVAL

Upon receipt of an Omcan shipment please inspect for external damage. If no damage is evident on the external packaging, open carton to ensure all ordered items are within the box, and there is no concealed damage to the machine. If the package has suffered rough handling, bumps or damage (visible or concealed), please note it on the bill of lading before accepting the delivery and contact Omcan within 24 hours, so we may initiate a claim with the carrier. A detailed report on the extent of the damage caused to the machine must be filled out within three days, from the delivery date shown in the shipping documents. Omcan has no recourse for damaged products that were shipped collect or third party.

Before operating any equipment, always read and familiarize yourself with all operation and safety instructions.

Omcan would like to thank you for purchasing this machine. It's of the utmost importance to save these instructions for future reference. Also save the original box and packaging for shipping the equipment if servicing or returning of the machine is required.

Omcan Fabrication et distribution Companie Limité et Food Machinery d'Amerique, dba Omcan et Omcan Inc. ne sont pas responsables de tout dommage ou blessure causé du fait que toute personne ait utilisé cet équipement de façon irrégulière. Le produit ne doit être exploité que par quelqu'un de plus de 18 ans, saine d'esprit, et pas sous l'influence d'une drogue ou d'acohol, qui a été formé pour utiliser cette machine correctement, et est vêtu de vêtements de sécurité approprié. Toute modification de la machine annule toute garantie, et peut causer un préjudice à des personnes utilisant la machine ou des personnes à proximité de la machine pendant son fonctionnement.

VÉRIFIEZ LE COLIS DÈS RÉCEPTION

Dès réception d'une expédition d'Omcan veuillez inspecter pour dommages externes. Si aucun dommage n'est visible sur l'emballage externe, ouvrez le carton afin de s'assurer que tous les éléments commandés sont dans la boîte, et il n'y a aucun dommage dissimulé à la machine. Si le colis n'a subi aucune mauvaises manipulations, de bosses ou de dommages (visible ou cachée), notez-le sur le bond de livraison avant d'accepter la livraison et contactez Omcan dans les 24 heures qui suivent, pour que nous puissions engager une réclamation auprès du transporteur. Un rapport détaillé sur l'étendue des dommages causés à la machine doit être rempli dans un délai de trois jours, à compter de la date de livraison indiquée dans les documents d'expédition. Omcan n'a aucun droit de recours pour les produits endommagés qui ont été expédiées ou cueilli par un tiers transporteur.

Avant d'utiliser n'importe quel équipement, toujours lire et vous familiariser avec toutes les opérations et les

General Information

consignes de sécurité.

Omcan voudrais vous remercier d'avoir choisi cette machine. Il est primordial de conserver ces instructions pour une référence ultérieure. Également conservez la boîte originale et l'emballage pour l'expédition de l'équipement si l'entretien ou le retour de la machine est nécessaire.

Omcan Empresa De Fabricacion Y Distribucion Inc. Y Maquinaria De Alimentos De America, Inc. dba Omcan y Omcan Inc. no son responsables de ningun daño o perjuicío causado por cualquier persona inadecuada o el uso descuidado de este equipo. El producto solo podra ser operado por una persona mayor de 18 años, en su sano juicio y no bajo alguna influencia de droga o alcohol, y que este ha sido entrenado en el correcto funcionamiento de esta máquina, y ésta usando ropa apropiada y autorizada. Cualquier modificación a la máquina anúla la garantía y puede causar daños a las personas usando la máquina mientras esta en el funcionamiento.

REVISE EL PAQUETE A SU LLEGADA

Tras la recepcion de un envio Omcan favor inspeccionar daños externos. Si no hay daños evidentes en el empaque exterior, Habra el carton para asegurararse que todos los articulos solicitados ésten dentro de la caja y no encuentre daños ocultos en la máquina. Si el paquete ha sufrido un manejo de poco cuidado, golpes o daños (visible o oculto) por favor anote en la factura antes de aceptar la entrega y contacte Omcan dentro de las 24 horas, de modo que podamos iniciar una reclamación con la compañia. Un informe detallado sobre los daños causados a la máquina debe ser llenado en el plazo de tres días, desde la fecha de entrega que se muestra en los documentos de envío. Omcan no tiene ningun recurso por productos dañados que se enviaron a recoger por terceros.

Antes de utilizar cualquier equipo, siempre lea y familiarizarse con todas las instrucciones de funcionamiento y seguridad.

Omcan le gustaría darle las gracias por la compra de esta máquina. Es de la mayor importancia para salvar estas instrucciones para futuras consultas. Además, guarda la caja original y el embalaje para el envío del equipo si servicio técnico o devolución de la máquina que se requiere.

Safety and Warranty

RESIDENTIAL USERS: vendor assumes no liability for parts or labor coverage for component failure or other damages resulting from installation in non-commercial or residential applications. The right is reserved to deny shipment for residential usage; if this occurs, you will be notified as soon as possible.

1 YEAR PARTS AND LABOUR WARRANTY

Within the warranty period, contact Omcan Inc. at 1-800-465-0234 to schedule an Omcan authorized service

Safety and Warranty

technician to repair the equipment locally.

Unauthorized maintenance will void the warranty. Warranty covers electrical and part failures, not improper use.

Please see https://omcan.com/disclaimer for complete info.

WARNING:

The packaging components are classified as normal solid urban waste and can therefore be disposed of without difficulty.

In any case, for suitable recycling, we suggest disposing of the products separately (differentiated waste) according to the current norms.

DO NOT DISCARD ANY PACKAGING MATERIALS IN THE ENVIRONMENT!

Technical Specifications

Item Number	47742	47743	47744
Model	FR-CN-0005	FR-CN-0009	FR-CN-0014
Capacity	120 L / 4.2 cu.ft.	290 L / 10.2 cu.ft.	450 L / 15.9 cu.ft.
Maximum Load	264.6 lbs. / 120 kgs.	639.3 lbs. / 290 kgs.	992.1 lbs. / 450 kgs.
Temperature Range	-26 to 0°C / -15 to 32°F		
Max Ambient Temp Rating	24°C / 75°F		
Temperature Controller Type	Digital		
Electrical	110-120V / 60Hz / 1		
Power	210 W	260 W	295 W
Power Consumption	1.469 kW per hour	2.208 kW per hour	2.781 kW per hour
Current	2A	3A	4A
Refrigerant and Injection	R290 / 56.7g	R290 / 79.9g	R290 / 104.9g
Defrosting	Manual		
Climate Class	N/ST		
Insulation Material	C5H10		
Compressor HP	1/4+	2/5+	2/3+
Number of Doors	2		
Number of Pans	5	9	14
Number of Casters	4		6
Dimensions	26.2” x 28.1” x 52.2” 665 x 715 x 1325mm	49.6” x 28.1” x 52.2” 1260 x 715 x 1325mm	70.9” x 28.1” x 52.2” 1800 x 715 x 1325mm
Weight	154.3 lbs. / 70 kgs.	198.4 lbs. / 90 kgs.	257.9 lbs. / 117 kgs.
Cabinet Packaging Dimensions	29.1” x 29.9” x 37.4” 740 x 760 x 950mm	52.6” x 29.9” x 37.4” 1335 x 760 x 950mm	73.8” x 29.9” x 37.4” 1875 x 760 x 950mm
Glass Packaging Dimensions	26.2” x 23” x 0.5” 665 x 584 x 13mm	51” x 23” x 0.5” 1295 x 584 x 13mm	72.8” x 23” x 0.5” 1850 x 584 x 13mm
Packaging Weight	169.8 lbs. / 77 kgs.	231.5 lbs. / 105 kgs.	313.1 lbs. / 142 kgs.

Installation

TRANSPORTATION AND PLACEMENT

- When transporting the chest freezer from one place to another, the inclination of the cabinet should not exceed 45 degrees, for prevention against compressor or system damage.
- Before use, remove all the packing material. The back side of the cabinet should be more than 20cm / 7.87” away from the wall, both flank sides more than 20cm / 7.87”.
- The freezer should be put in well-ventilated, dry place. Don’t use it under direct sunshine. The freezer should be kept away from water sink, heat source and any volatile, corrosive material.

OPTIONAL GLASS SNEEZE GUARD ASSEMBLY INSTRUCTIONS

HARDWARE INCLUDED WITH THE SNEEZE GUARD (SOLD SEPARATELY: 47742 – AR268, 47743 – AR269, 47744 – AR270)

- (1) front rail.
- (2) side rail.
- (4) metal plate for side rails.
- (8) L-shaped bracket.
- (1) screwdriver for screws installation.
- (10/11/12) small screws for rails (3/2/1 extra as spare use).
- (10/11/12) metal washers for small screws (3/2/1 extra as spare use).
- (20) large screws for glass panels (1 extra as spare use).
- (20) white plastic washers for large screws (1 extra as spare use).

1. Install the 3 plastic rails along the sides and front of the cabinet using the small screws and metal washers. A short rail should be installed on each side, and the long rail should be installed on the front.

Installation

2. Insert the side glass panel into the side rail. Attach a metal plate to the cabinet at both ends of the rail, using the small screws and metal washers. Then, attach each of the metal plates to the side glass panel using the large screws. Repeat this step on the other side of the cabinet.

Installation

NOTE: the small and large screws are not suggested to fasten tight firstly, so you can install the front glass panel easily by adjusting the position of the two side glass panels. White plastic washers will be put in the middle of large screws.

3. Insert the front glass panel into the front rail. Then, use the L-shaped brackets and the large screws that are pictured to attach the front glass panel to each of the side panels. There are two bracket mounting locations on each side; one at the top, and one at the bottom.

4. Install the gasket on the top edge of the front glass panel, and place top glass panel atop the front and side panels.

5. Use L-shaped brackets and large screws referenced in step 3 to attach the top glass panel to each of the side glass panels. There are two bracket mounting locations on each side; one at the front, and one at the back.

Installation

6. After finishing (4) glass panels attaching, fasten all screws. The final image is as below:

Operation

POWER SOURCE AND TEST-RUNNING

- Specified capacity of the wire is 6A. Section squares of the wire is 0.75mm. Single line or compound lines are all allowed. The fuse of 2.5A specified electric current should be installed. (Power cord should be replaced with the same of 6A and 0.75mm, when it is damaged).
- Single-phase power supply, 60Hz, voltage 110-120V. If the voltage is unstable, please install a voltage stabilizer with capacity above 1000W.
- Avoid turning on and off the power too frequently. If the power is turned off, wait an interval of 5 minutes before turning it on again.
- When the freezer will be out of use for a long time, disconnect the power first, then clean it. Please examine the circuit whether it is excellent before reuse.

ADJUSTING OF THE TEMPERATURE

- The temperature in the cabinet can be controlled with the temperature control screw and can be adjusted using a flat head screwdriver.
- FREEZING MAX is the strongest cooling position and is suitable for fast freezing. Do not keep the screw at this point for long.

Operation

FOOD STORAGE

- There must be space between the foods stored in the cabinet, between the foods and the inner surface of the cabinet, so as to keep good ventilation of cold air and freeze evenly. Do not put in any bottled or canned beverage with freezing point above the temperature in the cabinet when it is below zero.
- For foods that should be moisture-free or lose water easily, wrap them up with hermetic food bags or fresh films before putting in the cabinet for the sake of avoiding smell-mixing and reducing frosting.
- Storage of volatile and combustible gases, liquids such as strong alkalies, strong acids, petrol, etc. is forbidden.

Maintenance

- The freezer should be cleaned regularly. When cleaning, turn off the power, take out the foods in the cabinet, clean the inside using water or a little neutral detergent.
- Do not use boiling water, acid, chemical diluters, petrol and oil, or dirt-removing powder.
- Dry it after cleaning.
- Use light soap water when cleaning the door seal, apply a little of talcum powder on it after natural drying to extend its service life.
- Use a soft cloth with water or a little detergent to clean the out surface.
  Note: keeping the power supply and lower part of connect wires away from water to avoid electricity leakage.
- Except common breakdowns, those who are not service technician should not take apart and repair the freezer on their own so as to avoid worsening the trouble. Unauthorized repair of electrical part such as compressor, temperature controller is forbidden.

DEFROSTING

- Defrost for better freezing efficiency when the frost film in the cabinet is 4-5mm thick.
- When defrosting, turn off the power, take out the frozen foods, open the door for warming and melting. Use a soft cloth to absorb water and clean it up.
- Do not use sharp metal tools such as steel brush to clean the frost film when defrosting so as to avoid evaporator damage.

Troubleshooting

Symptom	Cause	Solution
The indicator is not on or the compressor does not start.	The plug isn't connected to the socket.	Re-connect it.
	No power.	Connect to a socket with power.
The indicator is on, but the compressor doesn't work and buzzes only.	The power voltage is <110-120V.	Attach a power-regulator with more than 1000W power.
The compressor stops a minute after start, and restart after a few minutes, and so repeatedly.	The power voltage is >110-120V.	
The compressor works normally, but the temperature in the cabinet cools too slowly.	The door is being opened too frequently.	Reduce open times.
	The is too much food in the cabinet, and it is placed improperly.	Place food properly, keep space between them for ventilation of cold air.
	The frost film is too thick.	Take out food and defrost.
	The surface of the condenser is too dirty.	Stop and clean the condenser.
	The door doesn't seal.	Adjust the door seal.
The noise is too loud.	The freezer is placed in a unstable location.	Place it in a stable location.
	The fixing of the freezer is loose.	Tighten the fixing.
	There's contact between pipes.	Separate the pipes.

THE FOLLOWING ARE WITHIN NORMAL OPERATING PARAMETERS:

- When the freezer is working or after is stops for a while, the refrigerant in the pipes is cycling and gives out "running water" sounds.
- The surface temperature of the compressor may be up 70°C ~ 80°C / 158°F ~ 176°F when it is working.
- The back side of step freezer gives out heat.
- In rainy season, the outer surface of the cabinet may have dew, which makes no defects on normal use. Just dry it with a piece of cloth.

For service call 1-800-465-0234.

Parts Breakdown

Model FR-CN-0005 47742

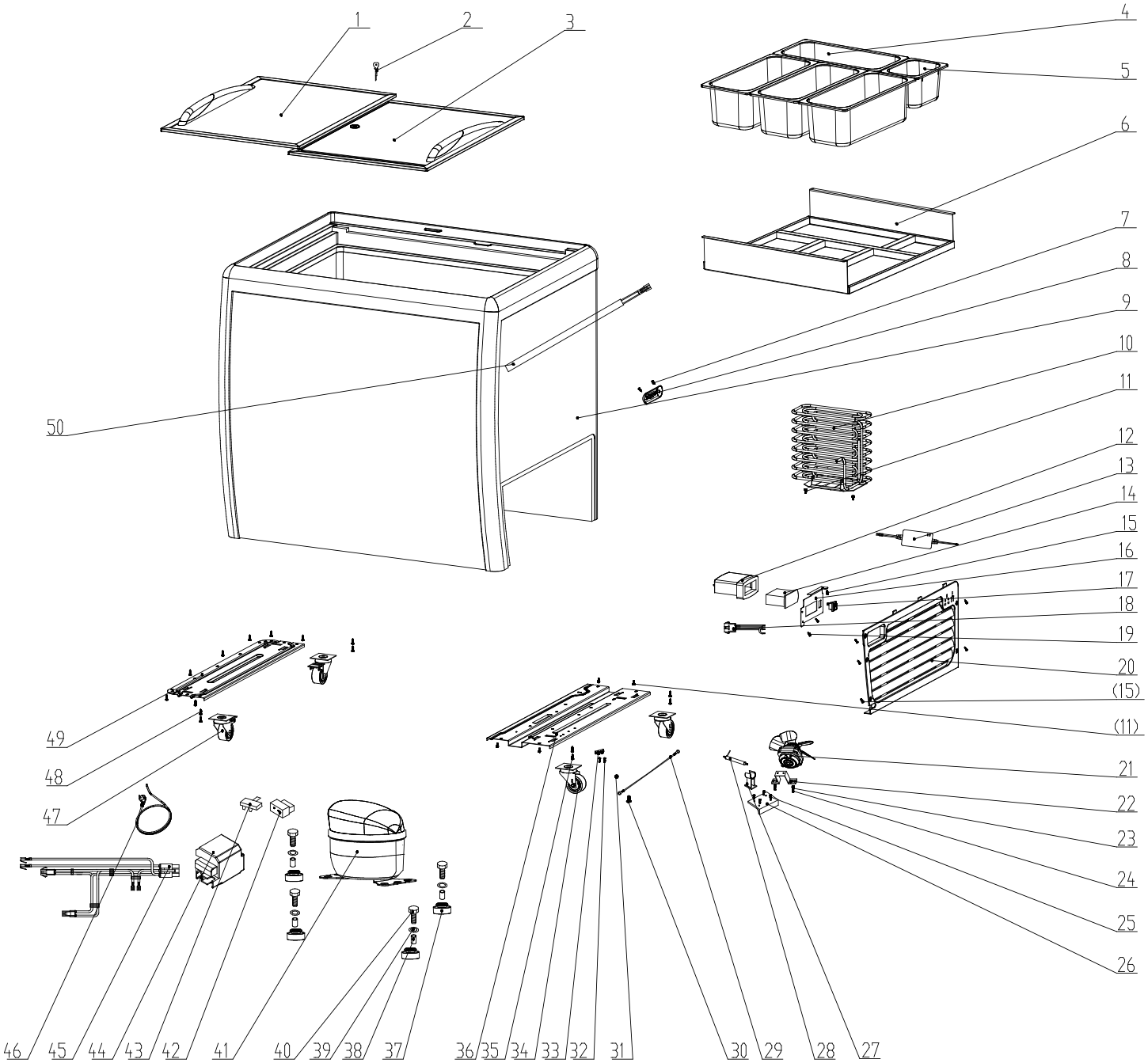

Parts Breakdown

Model FR-CN-0005 47742

Item No.	Description	Position
AN902	Upper Glass Door Assembly for 47742	1
AN903	Key and Lock for 47742	2
AN904	Lower Glass Door Assembly for 47742	3
AK372	Stainless Steel Pan 5L for 47742	4
AN905	Food Storage Boxes for 47742	5
AN906	Stainless Steel Bracket Assembly for 47742	6
AN907	Self Tapping Screw 3.9x16 for 47742	7
AN908	Temperature Display Probe Cover for 47742	8
AN909	Cabinet for 47742	9
AN910	Condenser for 47742	10
AN911	M5x16 Tapping Screw with Washer for 47742	11
AN912	Water Proof Box for 47742	12
AN913	LED Light Transformer for 47742	13
AN914	Electronic Thermostat for 47742	14
AN915	JIS 4x12 Self Tapping Screw for 47742	15
AN916	Electronic Temperature Control Bracket for 47742	16

Item No.	Description	Position
AN917	Lamp Switch for 47742	17
AN918	Temperature-Controlled Wiring for 47742	18
AN919	JIS 4x16 Self Tapping Screw for 47742	19
AN920	Compressor Cover for 47742	20
AN921	Fan Motor for 47742	21
AN922	Fan Bracket for 47742	22
AN923	M6x14 Tapping Screw for 47742	23
AN924	M6 Nut for 47742	24
AN925	ST 4.2x13 Self Tapping Screw for 47742	25
AN926	Filter Bracket Connecting Plate for 47742	26
AN620	Filter Support for 47742	27
AN927	Filter for 47742	28
AN928	M4x8 Tapping Screw and Serrated Lock Washers for 47742	30, 31
AN929	M4x16 Tapping Screw for 47742	32
AN623	Wire Clamp for 47742	33
AN930	Castor for 47742	34

Item No.	Description	Position
AN931	ST 4.8x13 Self Tapping Screw for 47742	35
AN932	Compressor Baseboard for 47742	36
AN933	Rubber Washer for 47742	37
AN934	Sleeving for 47742	38
AN935	Washer for 47742	39
AN936	Screw 6x30 for 47742	40
AN937	Compressor for 47742	41
AN938	Compressor Starter for 47742	42
AN939	Compressor Protector for 47742	43
AN940	Compressor Housing for 47742	44
AN941	Interior Wire for 47742	45
AN942	Power Cord for 47742	46
AN943	Castor with Brakes for 47742	47
AN944	JIS 5x13 Self Tapping Screw for 47742	48
AN945	U-Iron for 47742	49
AI312	LED Bar for 47742	50

Optional Sneeze Guard – AR268 (Sold Separately)

Item No.	Description	Position
AC116	Front Rail for 47742	
AC117	Side Rail for 47742	
AC118	Metal Plate for Side Rails for 47742	
AC119	L-Shaped Bracket for 47742	

Item No.	Description	Position
AC120	Screws for Rails for 47742	
AK760	Metal Washers for 47742	
AC121	Fasteners for Glass Panels for 47742	
AQ648	Gasket for 47742	

Item No.	Description	Position
AQ649	Side Glass for 47742	
AQ650	Front Glass for 47742	
AQ651	Top Glass for 47742	

Parts Breakdown

Model FR-CN-0009 47743

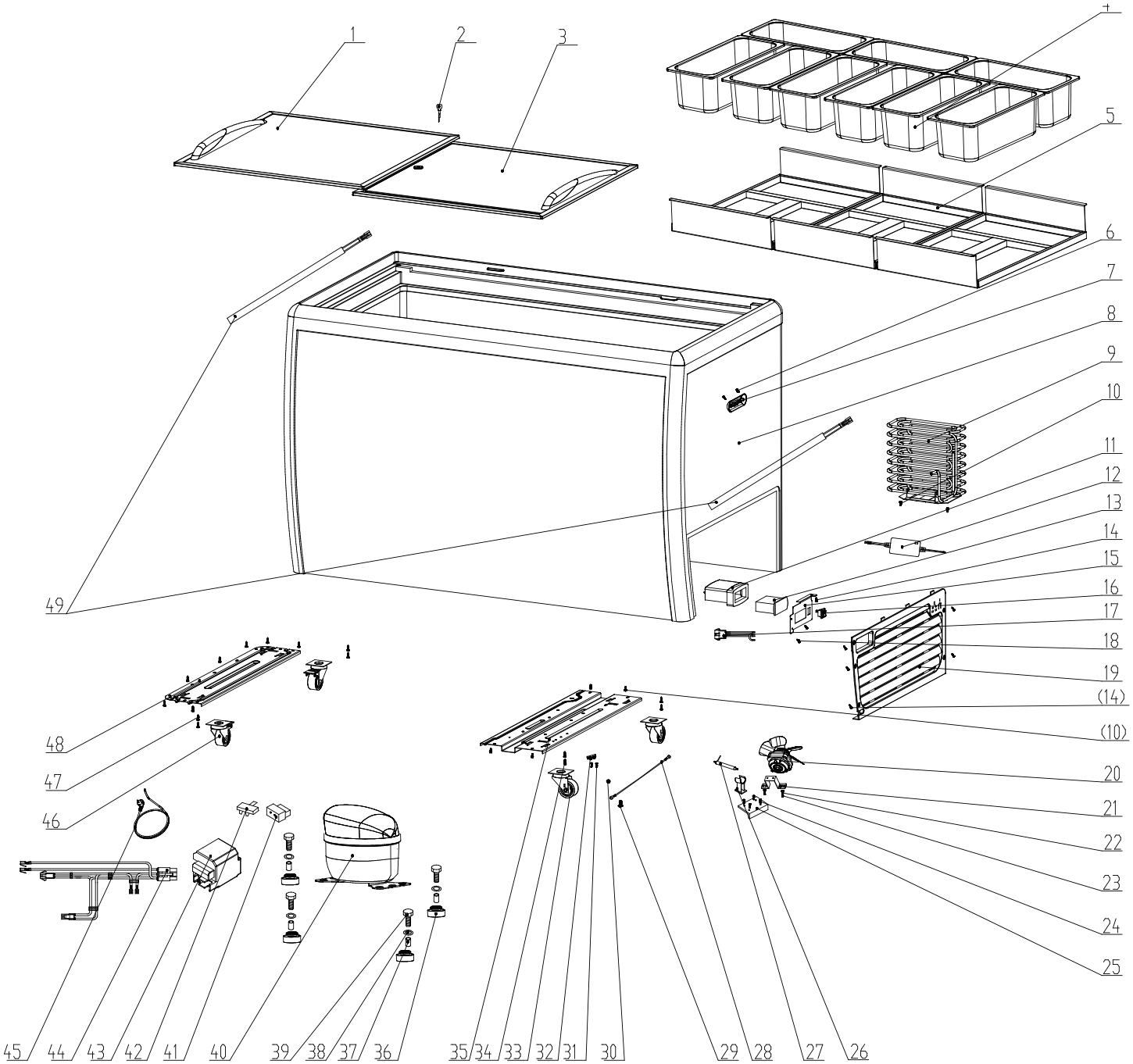

Parts Breakdown

Model FR-CN-0009 47743

Item No.	Description	Position
AN946	Upper Glass Door Assembly for 47743	1
AN903	Key and Lock for 47743	2
AN947	Lower Glass Door Assembly for 47743	3
AK372	Stainless Steel Pan 5L for 47743	4
AN948	Stainless Steel Bracket Assembly for 47743	5
AN907	Self Tapping Screw 3.9x16 for 47743	6
AN908	Temperature Display Probe Cover for 47743	7
AN949	Cabinet for 47743	8
AN950	Condenser for 47743	9
AN911	M5x16 Tapping Screw with Washer for 47743	10
AN912	Water Proof Box for 47743	11
AN913	LED Light Transformer for 47743	12
AN914	Electronic Thermostat for 47743	13
AN915	JIS 4x12 Self Tapping Screw for 47743	14
AN916	Electronic Temperature Control Bracket for 47743	15
AN917	Lamp Switch for 47743	16

Item No.	Description	Position
AN918	Temperature-Controlled Wiring for 47743	17
AN919	JIS 4x16 Self Tapping Screw for 47743	18
AN920	Compressor Cover for 47743	19
AN921	Fan Motor for 47743	20
AN922	Fan Bracket for 47743	21
AN923	M6x14 Tapping Screw for 47743	22
AN924	M6 Nut for 47743	23
AN925	ST 4.2x13 Self Tapping Screw for 47743	24
AN926	Filter Bracket Connecting Plate for 47743	25
AN620	Filter Support for 47743	26
AN927	Filter for 47743	27
AN928	M4x8 Tapping Screw and Serrated Lock Washers for 47743	29, 30
AN929	M4x16 Tapping Screw for 47743	31
AN623	Wire Clamp for 47743	32
AN930	Castor for 47743	33
AN931	ST 4.8x13 Self Tapping Screw for 47743	34

Item No.	Description	Position
AN932	Compressor Baseboard for 47743	35
AN951	Rubber Washer for 47743	36
AN952	Sleeving for 47743	37
AN953	Washer for 47743	38
AN954	Screw 6x30 for 47743	39
AN955	Compressor for 47743	40
AN956	Compressor Starter for 47743	41
AN957	Compressor Protector for 47743	42
AN958	Compressor Housing for 47743	43
AN941	Interior Wire for 47743	44
AN942	Power Cord for 47743	45
AN943	Castor with Brakes for 47743	46
AN944	JIS 5x13 Self Tapping Screw for 47743	47
AN945	U-Iron for 47743	48
AI312	LED Bar for 47743	49

Optional Sneeze Guard – AR269 (Sold Separately)

Item No.	Description	Position
AC126	Front Rail for 47743	
AC117	Side Rail for 47743	
AC118	Metal Plate for Side Rails for 47743	
AC119	L-Shaped Bracket for 47743	
AC120	Screws for Rails for 47743	

Item No.	Description	Position
AK760	Metal Washers for 47743	
AC121	Fasteners for Glass Panels for 47743	
AQ652	Screwdriver for Screws Installa-tion for 47743	
AQ653	User Manual of Sneeze Guard for 47743	
AQ654	Gasket for 47743	

Item No.	Description	Position
AQ649	Side Glass for 47743	
AQ655	Front Glass for 47743	
AQ656	Top Glass for 47743	

Parts Breakdown

Model FR-CN-0014 47744

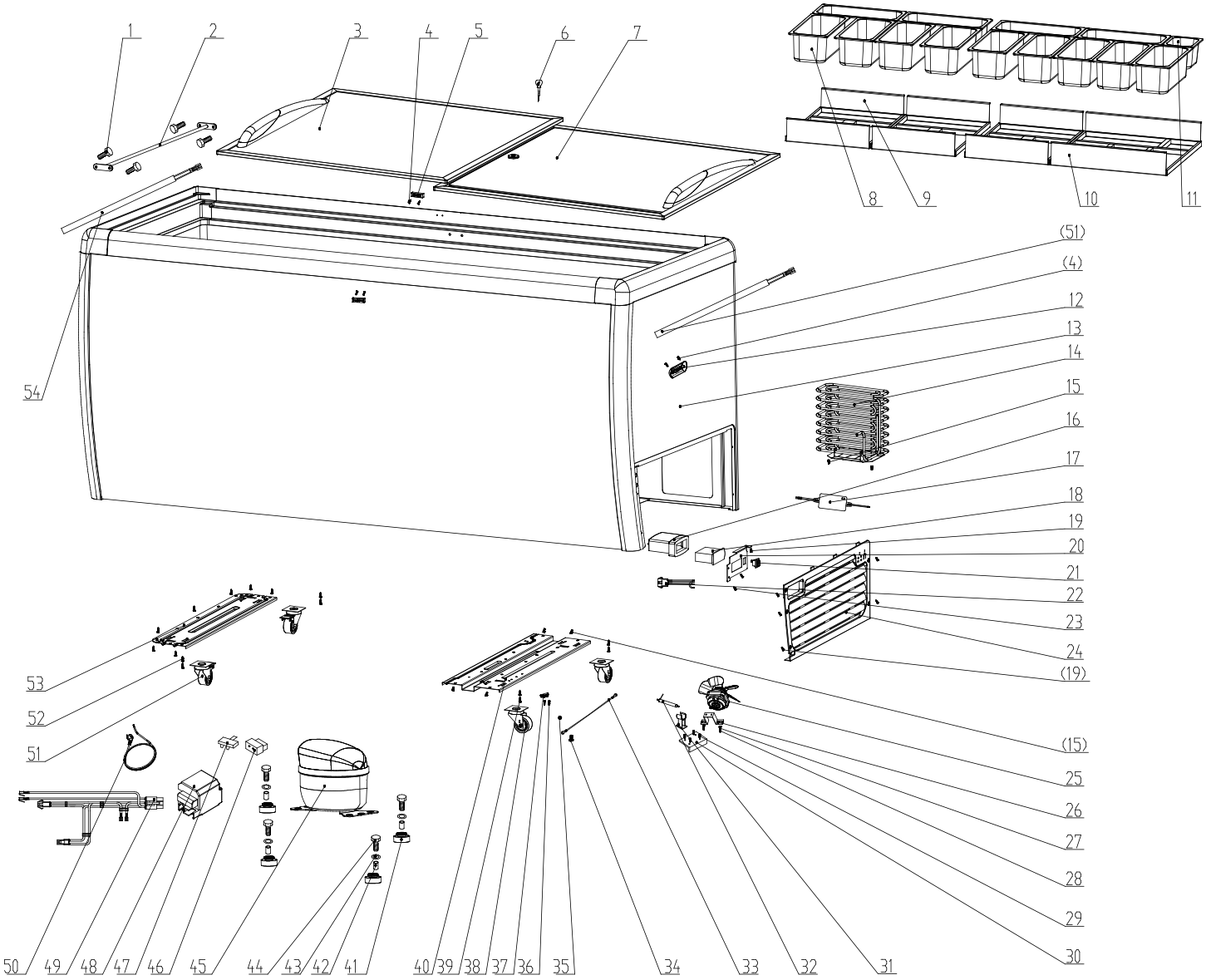

Parts Breakdown

Model FR-CN-0014 47744

Item No.	Description	Position
AN959	Stainless Steel Screw M5x20 for 47744	1
AN960	Tie Bar for 47744	2
AN961	Upper Glass Door Assembly for 47744	3
AN907	Self Tapping Screw 3.9x16 for 47744	4
AN962	Glass Door Stop Block for 47744	5
AN963	Key and Lock for 47744	6
AN964	Lower Glass Door Assembly for 47744	7
AK372	Stainless Steel Pan 5L for 47744	8
AN948	Stainless Steel Bracket Assembly for 47744	9
AN906	Stainless Steel Bracket Assembly for 47744	10
AN905	Food Storage Boxes for 47744	11
AN908	Temperature Display Probe Cover for 47744	12
AN965	Cabinet for 47744	13
AN966	Condenser for 47744	14
AK760	Metal Washers for 47744	15
AN912	Water Proof Box for 47744	16
AN913	LED Light Transformer for 47744	17
AN914	Electronic Thermostat for 47744	18

Item No.	Description	Position
AN915	JIS 4x12 Self Tapping Screw for 47744	19
AN916	Electronic Temperature Control Bracket for 47744	20
AN917	Lamp Switch for 47744	21
AN918	Temperature-Controlled Wiring for 47744	22
AN919	JIS 4x16 Self Tapping Screw for 47744	23
AN920	Compressor Cover for 47744	24
AN921	Fan Motor for 47744	25
AN922	Fan Bracket for 47744	26
AN923	M6x14 Tapping Screw for 47744	27
AN924	M6 Nut for 47744	28
AN925	ST 4.2x13 Self Tapping Screw for 47744	29
AN926	Filter Bracket Connecting Plate for 47744	30
AN620	Filter Support for 47744	31
AN927	Filter for 47744	32
AN928	M4x8 Tapping Screw and Serrated Lock Washers for 47744	34, 35
AN929	M4x16 Tapping Screw for 47744	36
AN623	Wire Clamp for 47744	37
AN930	Castor for 47744	38

Item No.	Description	Position
AN931	ST 4.8x13 Self Tapping Screw for 47744	39
AN932	Compressor Baseboard for 47744	40
AN967	Rubber Washer for 47744	41
AN968	Sleeving for 47744	42
AN969	Washer for 47744	43
AN970	Screw 6x30 for 47744	44
AN971	Compressor for 47744	45
AN972	Compressor Starter for 47744	46
AN973	Compressor Protector for 47744	47
AN974	Compressor Housing for 47744	48
AN941	Interior Wire for 47744	49
AN942	Power Cord for 47744	50
AN943	Castor with Brakes for 47744	51
AN944	JIS 5x13 Self Tapping Screw for 47744	52
AN945	U-Iron for 47744	53
AI312	LED Bar for 47744	54

Optional Sneeze Guard – AR270 (Sold Separately)

Item No.	Description	Position
AR261	Front Rail for 47744	
AC117	Side Rail for 47744	
AC118	Metal Plate for Side Rails for 47744	
AC119	L-Shaped Bracket for 47744	

Item No.	Description	Position
AC120	Screws for Rails for 47744	
AK760	Metal Washers for 47744	
AC121	Fasteners for Glass Panels for 47744	
AR262	Gasket for 47744	

Item No.	Description	Position
AQ649	Side Glass for 47744	
AR263	Front Glass for 47744	
AR264	Top Glass for 47744	

Electrical Schematics

Model FR-CN-0005 47742

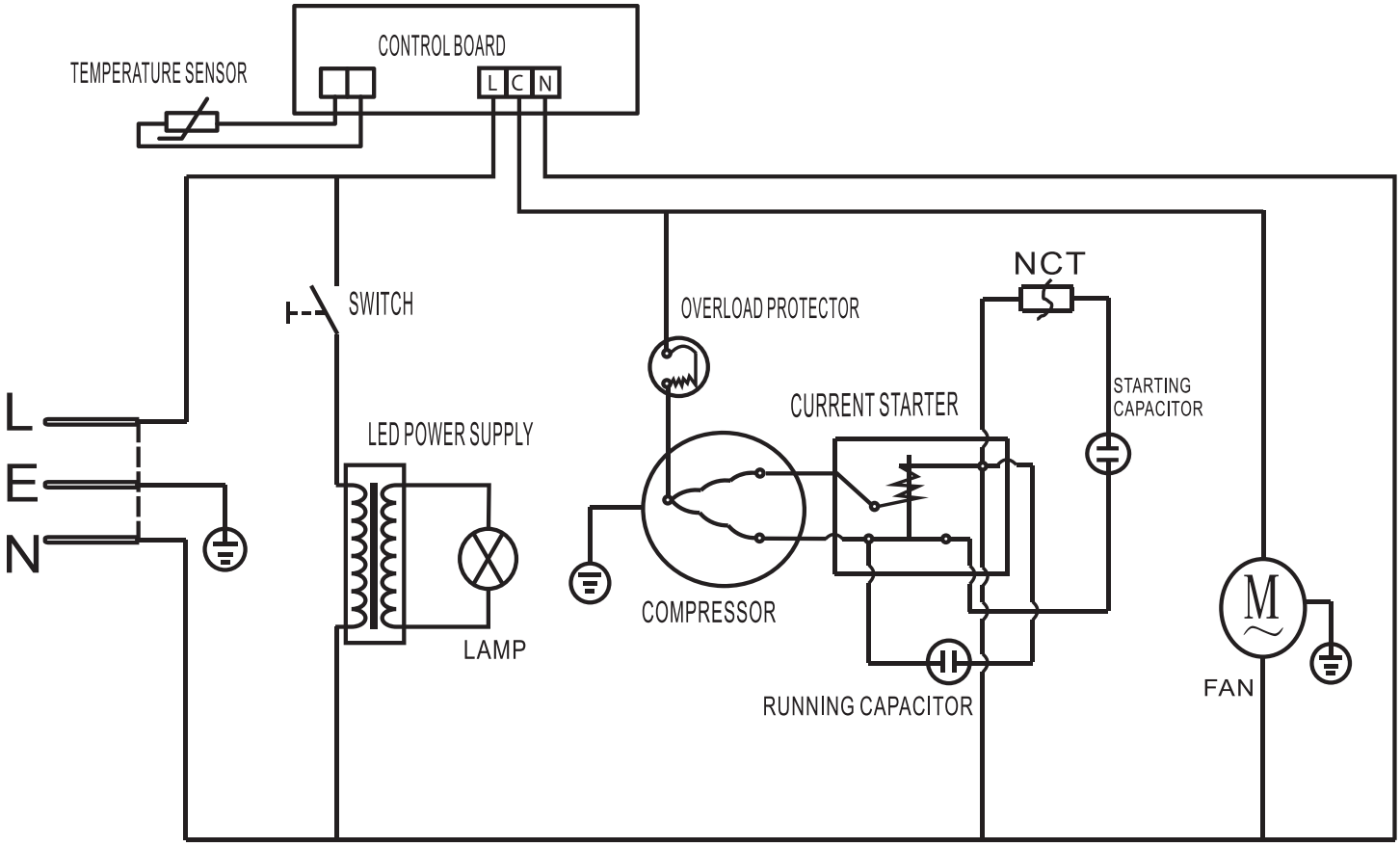

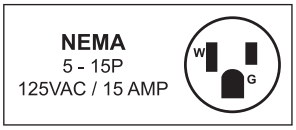

Electrical Schematics

Model FR-CN-0009 47743
Model FR-CN-0014 47744

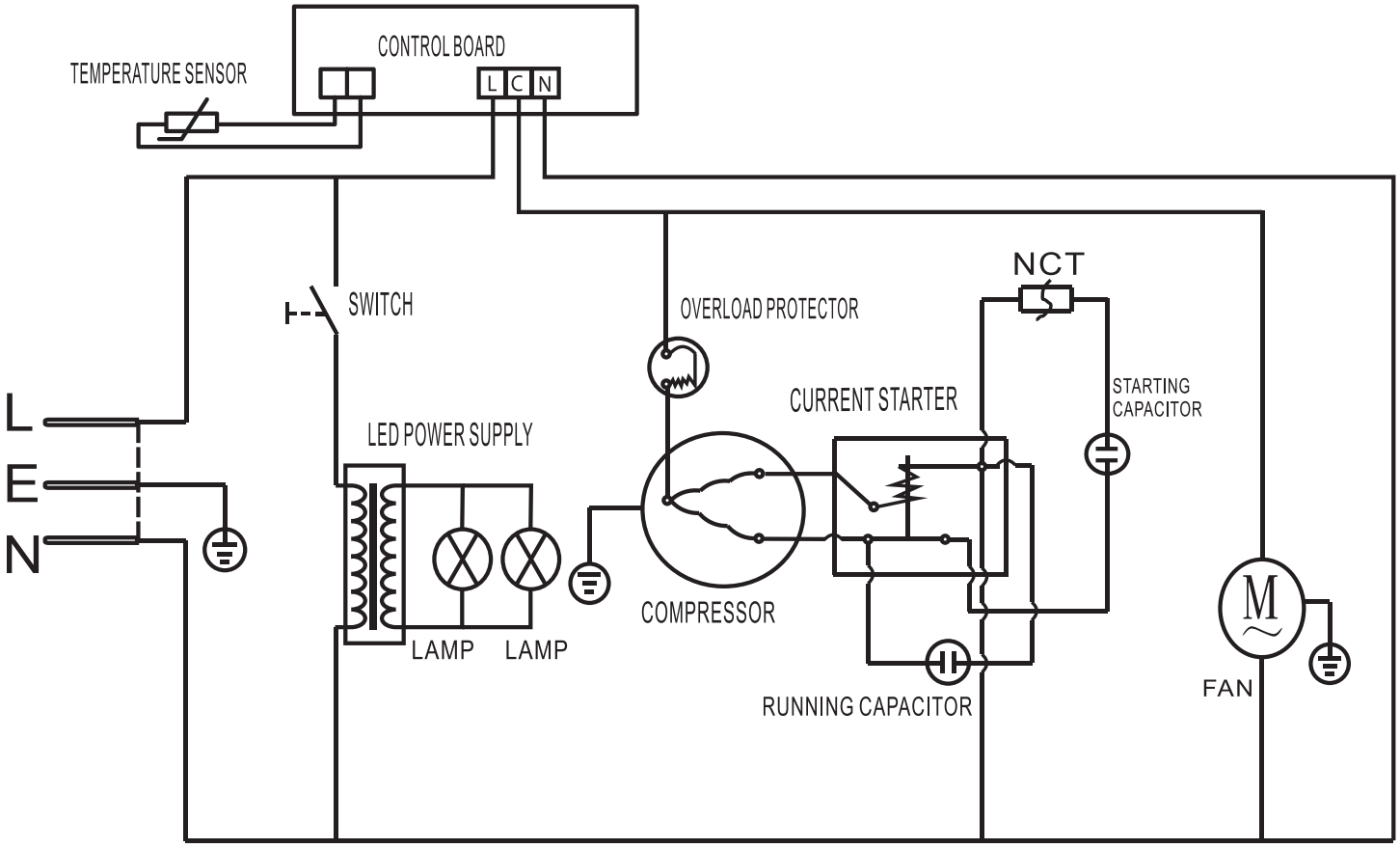

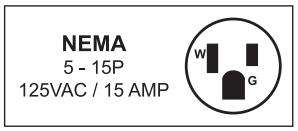

Notes

Warranty Registration

Thank you for purchasing an Omcan product. To register your warranty for this product, complete the information below, tear off the card at the perforation and then send to the address specified below. You can also register online by visiting:

Merci d'avoir acheté un produit Omcan. Pour enregistrer votre garantie pour ce produit, complétez les informations ci-dessous, détachez la carte au niveau de la perforation, puis l'envoyer à l'adresse spécifié ci-dessous. Vous pouvez également vous inscrire en ligne en visitant:

Gracias por comprar un producto Omcan usted. Para registrar su garantía para este producto, complete la información a continuación, cortar la tarjeta en la perforación y luego enviarlo a la dirección indicada a continuación. También puede registrarse en línea en:

https://omcan.com/warranty-registration/

For mailing in Canada

Pour postale au Canada

Por correo en Canadá

OMCAN
PRODUCT WARRANTY REGISTRATION
3115 Pepper Mill Court,
Mississauga, Ontario
Canada, L5L 4X5

For mailing in the US

Pour diffusion aux États-Unis

Por correo en los EE.UU.

OMCAN
PRODUCT WARRANTY REGISTRATION
4450 Witmer Industrial Estates, Unit 4,
Niagara Falls, New York
USA, 14305

or email to: service@omcan.com

Purchaser's Information

Name: _____

Address: _____

City: _____ Province or State: _____ Postal or Zip: _____

Country: _____

Dealer from which Purchased: _____

Dealer City: _____ Dealer Province or State: _____

Invoice: _____

Company Name: _____

Telephone: _____

Email Address: _____

Type of Company:

☐ Restaurant ☐ Bakery ☐ Deli

☐ Butcher ☐ Supermarket ☐ Caterer

☐ Institution *(specify)*: _____

☐ Other *(specify)*: _____

Model Name: _____ Model Number: _____

Serial Number: _____

Machine Description: _____

Date of Purchase (MM/DD/YYYY): _____

Date of Installation (MM/DD/YYYY): _____

Would you like to extend the warranty? ☐ Yes ☐ No

Thank you for choosing Omcan | Merci d'avoir choisi Omcan | Gracias por elegir Omcan

Since 1951 Omcan has grown to become a leading distributor of equipment and supplies to the North American food service industry. Our success over these many years can be attributed to our commitment to strengthen and develop new and existing relationships with our valued customers and manufacturers. Today with partners in North America, Europe, Asia and South America, we continually work to improve and grow the company. We strive to offer customers exceptional value through our qualified local sales and service representatives who provide convenient access to over 6,500 globally sourced products.

Depuis 1951 Omcan a grandi pour devenir un des “leaders” de la distribution des équipements et matériel pour l’industrie des services alimentaires en Amérique du Nord. Notre succès au cours de ces nombreuses années peut être attribué à notre engagement à renforcer et à développer de nouvelles et existantes relations avec nos clients et les fabricants de valeur. Aujourd’hui avec des partenaires en Amérique du Nord, Europe, Asie et Amérique du Sud, nous travaillons continuellement à améliorer et développer l’entreprise. Nous nous efforçons d’offrir à nos clients une valeur exceptionnelle grâce à nos ventes locales qualifiées et des représentants de service qui offrent un accès facile à plus de 6500 produits provenant du monde entier.

Desde 1951 Omcan ha crecido hasta convertirse en un líder en la distribución de equipos y suministros de alimentos en América del Norte industria de servicios. Nuestro éxito en estos años se puede atribuir a nuestro compromiso de fortalecer y desarrollar nuevas relaciones existentes con nuestros valiosos clientes y fabricantes. Hoy con socios de América del Norte, Europa, Asia y América del Sur, que trabajan continuamente para mejorar y crecer la empresa. Nos esforzamos por ofrecer a nuestros clientes valor excepcional a través de nuestro local de ventas y representantes de los servicios que proporcionan un fácil acceso a más de 6,500 productos con origen a nivel mundial.