Scotsman®
Ice Systems

Service Manual for Modular Flake and Nugget Ice Machines

Models

NH0422X, NS0422X, FS0522X, NH0622X, NS0622X, FS0822X, NH0922X, NS0922X, FS1222X, NH1322X, NS1322X, FS1522X

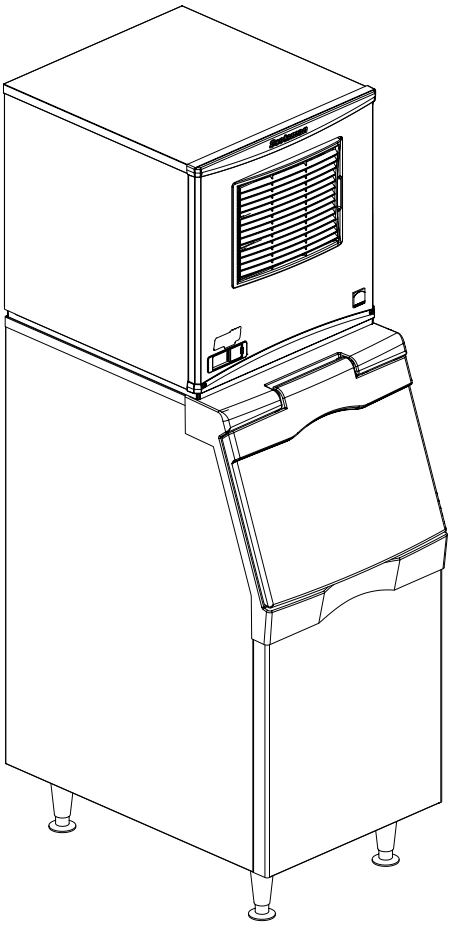

Safety Information

Important Safety Information. Make sure to read through fully to avoid severe injury or death.

WARNING

R290 Refrigerant is Flammable.
Flame can cause burns or property damage
Keep away from sources of fire

This ice machine contains **FLAMMABLE** refrigerant and improper use can result in fire or explosion. Do not use cigarettes, vapes, or cellphones near pipes or cables, as it can be a source of ignition or spark.

This ice machine must not be installed next to equipment with an open ignition source (ie. open flames, an operating gas appliance, or electric heater). Do not store explosive substances such as aerosol cans with a flammable propellant in this appliance.

WARNING: Do not use electrical appliances inside the food/ice storage compartments unless they are of the type recommended by the manufacturer.

WARNING: In order to reduce flammability hazards the installation of this appliance must only be carried out by a suitably qualified person.

This appliance must be installed according to the safety standard for refrigeration systems presented in ANSI/ASHRAE 15.

Do not install next to anything that continuously vibrates, avoiding excessive vibrations or pulsations.

Install in a well ventilated environment and ensure ventilation and outlets are not obstructed.

Properly secure electrical wiring and cabling for the machine to minimize wear, vibrations, corrosion, excessive pressure, sharp edges, or other adverse environmental effects that could cause damage to wiring over time.

Keep fire extinguisher nearby in case of emergencies.

WARNING: Do not damage the refrigerating circuit

Use a Scotsman recommended technician certified to repair R290 equipment.

Install ONLY Scotsman factory service parts. Use of non-OEM parts can be dangerous due to the design changes needed to safely use R290 refrigerant.

WARNING: Cancer and Reproductive Harm. Visit www.P65Warnings.ca.gov for details.

This appliance is not intended for use by persons (including children) with reduced physical, sensory or mental capabilities, or lack of experience and knowledge, unless they have been given supervision or instruction concerning the use of the appliance by a person responsible for their safety.

Children should be supervised to ensure that they do not play with the appliance.

Caution: This equipment should only be used on ice bins without electrical components or bins designed to be used with flammable refrigerants.

Safety Information, continued

WARNING: Do not use means to accelerate the defrosting process or to clean, other than those recommended by the manufacturer. The appliance shall be stored in a room without continuously operating ignition sources

Do not pierce or burn.

Be aware that refrigerants may not contain an odor.

All installation, service, maintenance and decommissioning to be carried out by technicians certified to handle FLAMMABLE REFRIGERANTS.

Install in a well-ventilated environment and ensure ventilation and outlets are not obstructed.

When breaking into the refrigerant circuit to make repairs – or for any other purpose conventional procedures shall be used. However, for flammable refrigerants it is important that best practice be followed, since flammability is a consideration. The following procedure shall be adhered to:

a) safely remove refrigerant following local and national regulations;
b) purge the circuit with inert gas;
c) evacuate;
d) purge with inert gas;
e) open the circuit by cutting or brazing.

The refrigerant charge shall be recovered into the correct recovery cylinders if venting is not allowed by local and national codes. For appliances containing flammable refrigerants, the system shall be purged with oxygen-free nitrogen to render the appliance safe for flammable refrigerants. This process might need to be repeated several times. Compressed air or oxygen shall not be used for purging refrigerant systems. For appliances containing flammable refrigerants, refrigerants purging shall be achieved by breaking the vacuum in the system with oxygen-free nitrogen and continuing to fill until the working pressure is achieved, then venting to atmosphere, and finally pulling down to a vacuum. This process shall be repeated until no refrigerant is within the system. When the final oxygen-free nitrogen charge is used, the system shall be vented down to atmospheric pressure to enable work to take place. Ensure that the outlet for the vacuum pump is not close to any potential ignition sources and that ventilation is available.

Ensure that the leak detection equipment being used is suitable for use with FLAMMABLE REFRIGERANT; i.e., non-sparking, adequately sealed or intrinsically safe.

Minimum Installation Area by Model in meters²

Model Number	Minimum Area m2
FS0522WX-1, NH0422WX-1, NS0422WX-1	6.1
FS0822WX-1, NS0622WX-1, NH0622WX-1	7.1
FS0522AX-1, NH0422AX-1, NS0422AX-1, FS1222WX-32, NS0922WX-32, NH0922WX-32	8.1
FS0822AX-1, NS0622AX-1, NH0622AX-1	8.8
FS1222WX-32, NS0922AX-32, NH0922WX-1, NS0922AX-1, NH0922AX-1	9.4
NS1322WX-32, NH1322WX-32	13.5
NS1322AX-32, NH1322AX-32	16.2

WARNING: This appliance shall be stored in an area where the room size corresponds to the room area as specified for operation. Please see the table above for the minimum allowed area of installation.

WARNING: This appliance should be stored in a room without continuously operating open flames (for example an operating gas appliance) or other potential ignition sources (for example an operating electric heater, hot surfaces).

Where electrical components are being changed, they shall be fit for the purpose and to the correct specification. At all times, the manufacturer's maintenance and service guidelines shall be followed. If in doubt, consult the manufacturer's technical department for assistance. The following checks shall be applied to installations using FLAMMABLE REFRIGERANTS:

a) the actual REFRIGERANT CHARGE is in accordance with the room size within which the refrigerant containing parts are installed;
b) the ventilation machinery and outlets are operating adequately and are not obstructed;
c) if an indirect refrigerating circuit is being used, the secondary circuit shall be checked for the presence of refrigerant;
d) marking to the equipment continues to be visible and legible. Markings and signs that are illegible shall be corrected;
e) refrigerating pipe or components are installed in a position where they are unlikely to be exposed to any substance which may corrode refrigerant containing components, unless the components are constructed of materials which are inherently resistant to being corroded or are suitably protected against being so corroded.

Repair and maintenance to electrical components shall include initial safety checks and component inspection procedures. If a fault exists that could compromise safety, then no electrical supply shall be connected to the circuit until it is satisfactorily dealt with. If the fault cannot be corrected immediately but it is necessary to continue operation, an adequate temporary solution shall be used. This shall be reported to the owner of the equipment, so all parties are advised. Initial safety checks shall include:

Safety Information, continued

a) that capacitors are discharged: this shall be done in a safe manner to avoid possibility of sparking;
b) that no live electrical components and wiring are exposed while charging, recovering or purging the system;
c) that there is continuity of earth bonding.

During repairs to sealed components, all electrical supplies shall be disconnected from the equipment being worked upon prior to any removal of sealed covers, etc. If it is absolutely necessary to have an electrical supply to equipment during servicing, then a permanently operating form of leak detection shall be located at the most critical point to warn of a potentially hazardous situation.

Particular attention shall be paid to the following to ensure that by working on electrical components, the casing is not altered in such a way that the level of protection is affected. This shall include damage to cables, excessive number of connections, terminals not made to original specification, damage to seals, incorrect fitting of glands, etc. Ensure that the apparatus is mounted securely. Ensure that seals or sealing materials have not degraded to the point that they no longer serve the purpose of preventing the ingress of flammable atmospheres. Replacement parts shall be in accordance with the manufacturer's specifications.

Do not apply any permanent inductive or capacitance loads to the circuit without ensuring that this will not exceed the permissible voltage and current permitted for the equipment in use. Intrinsically safe components are the only types that can be worked on while live in the presence of a flammable atmosphere. The test apparatus shall be at the correct rating. Replace components only with parts specified by the manufacturer. Other parts can result in the ignition of refrigerant in the atmosphere from a leak.

NOTE The use of silicon sealant can inhibit the effectiveness of some types of leak detection equipment. Intrinsically safe components do not have to be isolated prior to working on them.

Check that cabling will not be subject to wear, corrosion, excessive pressure, vibration, sharp edges, or any other adverse environmental effects. The check shall also take into account the effects of aging or continual vibration from sources such as compressors or fans.

Introduction

These ice machines are the result of years of experience with flaked and nugget ice machines.

The latest in electronics has been coupled with the time tested Scotsman flaked ice system to provide reliable ice making and the features needed by customers.

The features include easily accessible air filters, simple conductivity water level sensing, evaporator clearing at shut down, photo-eye sensing bin control and the ability to add options.

Contents

Installation: . . . . . Page 3
Location: . . . . . Page 4
NH0422, NS0422, FS0522, NH0622, NS0622, FS0822 Cabinet Layout . . . . . Page 5
NH0922, NS0922, FS1222, NH1322, NH1322, FS1522 Cabinet Layout . . . . . Page 6
Unpacking & Install Prep . . . . . Page 7
Water . . . . . Page 8
Electrical- All Models . . . . . Page 9
Refrigeration - Remote Condenser Models . . . . . Page 10
Remote Condenser Location - Limits . . . . . Page 11
For The Installer: Remote Condenser . . . . . Page 12
Line Set Routing and Brazing (applies to remote units only) . . . . . Page 13
Line Set Routing and Brazing . . . . . Page 14
Water - Remote Models . . . . . Page 15
Final Check List . . . . . Page 16
Controller . . . . . Page 17
AutoAlert and Display Code . . . . . Page 18
Component Indicator Lights . . . . . Page 19
Electrical Component Details . . . . . Page 20
Refrigeration . . . . . Page 21
Sequence of Operation . . . . . Page 22
Refrigeration System . . . . . Page 23
Water System . . . . . Page 24
Air Cooled Refrigeration . . . . . Page 25

Water Cooled Refrigeration . . . . . Page 26
Remote Air Cooled Refrigeration . . . . . Page 27
How Ice Is Made . . . . . Page 28
Technical Information . . . . . Page 29
Heat Load, Charge and Condenser GPM . . . . . Page 30
Refrigeration System Pressures . . . . . Page 31
Maintenance . . . . . Page 32
Maintenance: Scale Removal and Sanitation . . . . . Page 33
Maintenance: Sensors . . . . . Page 34
Service Diagnosis - Air Cooled . . . . . Page 35
Service Diagnosis - Water Cooled . . . . . Page 36
Service Diagnosis - Remote Air Cooled . . . . . Page 37
Service Diagnosis - Remote Air Cooled . . . . . Page 38
Service Diagnosis - Refrigeration System Failure . . . . . Page 39
Service Diagnosis - Optional Ice Level Controls . . . . . Page 40
Options . . . . . Page 41
Repair Procedures: Bearing And Extruder . . . . . Page 42
Auger and Evaporator Inspection . . . . . Page 43
Water Seal . . . . . Page 44
Repair Procedures: The Gear Reducer . . . . . Page 45
Repair Procedures: Replace the Evaporator . . . . . Page 46
Decommissioning . . . . . Page 47
Decommissioning, continued . . . . . Page 48
Decommissioning, continued . . . . . Page 49

Installation:

This machine is designed to be used indoors, in a controlled environment. Operation outside the limits listed here will void the warranty.

Air temperature limits

	Minimum	Maximum
Ice maker	50°F. / 10°C.	100°F. / 38°C.
Remote condenser	-20ºF. / -28°C.	120°F. / 48°C.

Water temperature limits

	Minimum	Maximum
All models	40°F. / 4.4°C.	100°F. / 38°C.

Water pressure limits (potable)

	Minimum	Maximum
All models	20 psi / 1.3 bar	80 psi / 5.5 bar

Water pressure limit to water cooled condenser is 150 PSI

Voltage limits

	Minimum	Maximum
115 volt	104	126
208-230 60 Hz	198	253

Minimum conductivity (RO water)

- 10 microSiemens / CM

Water Quality (ice making circuit)

- Potable

The quality of the water supplied to the ice machine will have an impact on the time between cleanings and ultimately on the life of the product. Water can contain impurities either in suspension or in solution. Suspended solids can be filtered out. In solution or dissolved solids cannot be filtered, they must be diluted or treated. Water filters are recommended to remove suspended solids. Some filters have treatment in them for dissolved solids.

Check with a water treatment service for a recommendation.

This machine can be supplied with Reverse Osmosis water, but the water conductivity must be no less than 10 microSiemens/cm.

Potential for Airborne Contamination

Installing an ice machine near a source of yeast or similar material can result in the need for more frequent sanitation cleanings due to the tendency of these materials to contaminate the machine.

Most water filters remove chlorine from the water supply to the machine which contributes to this situation. Testing has shown that using a filter that does not remove chlorine, such as the Scotsman Aqua Patrol, will greatly improve this situation.

Warranty Information

The warranty statement for this product is provided separately from this manual. Refer to it for applicable coverage. In general warranty covers defects in material or workmanship. It does not cover maintenance, corrections to installations, or situations when the machine is operated in circumstances that exceed the limitations printed above.

Location:

While the machine will operate satisfactorily within the listed air and water temperature limits, it will produce more ice when those temperatures are nearer the lower limits. Avoid locations that are hot, dusty, greasy or confined. Air cooled models need plenty of room air to breathe. Air cooled models must have at least six inches of space at the back for air discharge; however, more space will allow better performance.

Airflow

Air flows into the front of the cabinet and out the back. The air filters are on the outside of the front panel and are easily removed for cleaning.

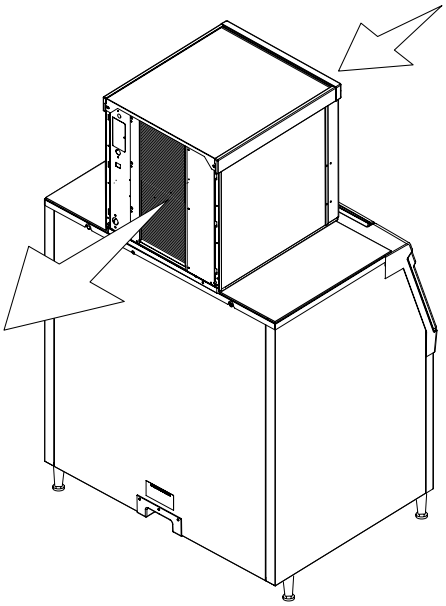

Options

Side air flow kits KPFSA223 or KPFSA227 are available for air cooled models. A filter kit for the remote condenser is KERCF

Ice is made until it fills the bin enough to block an infrared light beam inside the base of the machine. A field installed kit is available to adjust the maintained ice level lower. The kit number is KVS.

The standard controller has excellent diagnostic capabilities and communicates to the user through the AutoAlert light panel, seen through the front panel. Field installed kits are available that can log data and provide additional information when the front panel is removed. The kit numbers are KSBU and KSB-NU. See page 19.

Bin compatibility

All models have the same footprint: 22 inches wide by 24 inches deep. Confirm available space when replacing a prior model.

Bin & adapter list:

- B322S – no adapter needed
- B330P or B530P or B530S – Use KBT27
- B842S – KBT39
- B948S – KBT38 for single unit
- B948S – KBT38-2X for two units side by side
- BH1100, BH1300 and BH1600 upright bins include filler panels to accommodate a single 22 inch wide ice machine. No adapter is needed.

Dispenser compatibility

Only nugget ice models may be used with ice dispensers. Flaked ice is not dispensable.

- ID150 – use KBT42 and KDIL-PN-150, includes KVS, KNUGDIV and R629088514
- ID200 – use KBT43 and KNUGDIV and KVS
- ID250 – use KBT43 and KNUGDIV and KVS

See sales literature for other brand model ice and beverage dispenser applications.

Other Bins & Applications:

Note the drop zone and ultrasonic sensor locations in the illustrations on the next pages.

Scotsman ice systems are designed and manufactured with the highest regard for safety and performance. Scotsman assumes no liability of responsibility of any kind for products manufactured by Scotsman that have been altered in any way, including the use of any part and/or other components not specifically approved by Scotsman.

Scotsman reserves the right to make design changes and/or improvements at any time. Specifications and design are subject to change without notice.

NH0422, NS0422, FS0522, NH0622, NS0622, FS0822 Cabinet Layout

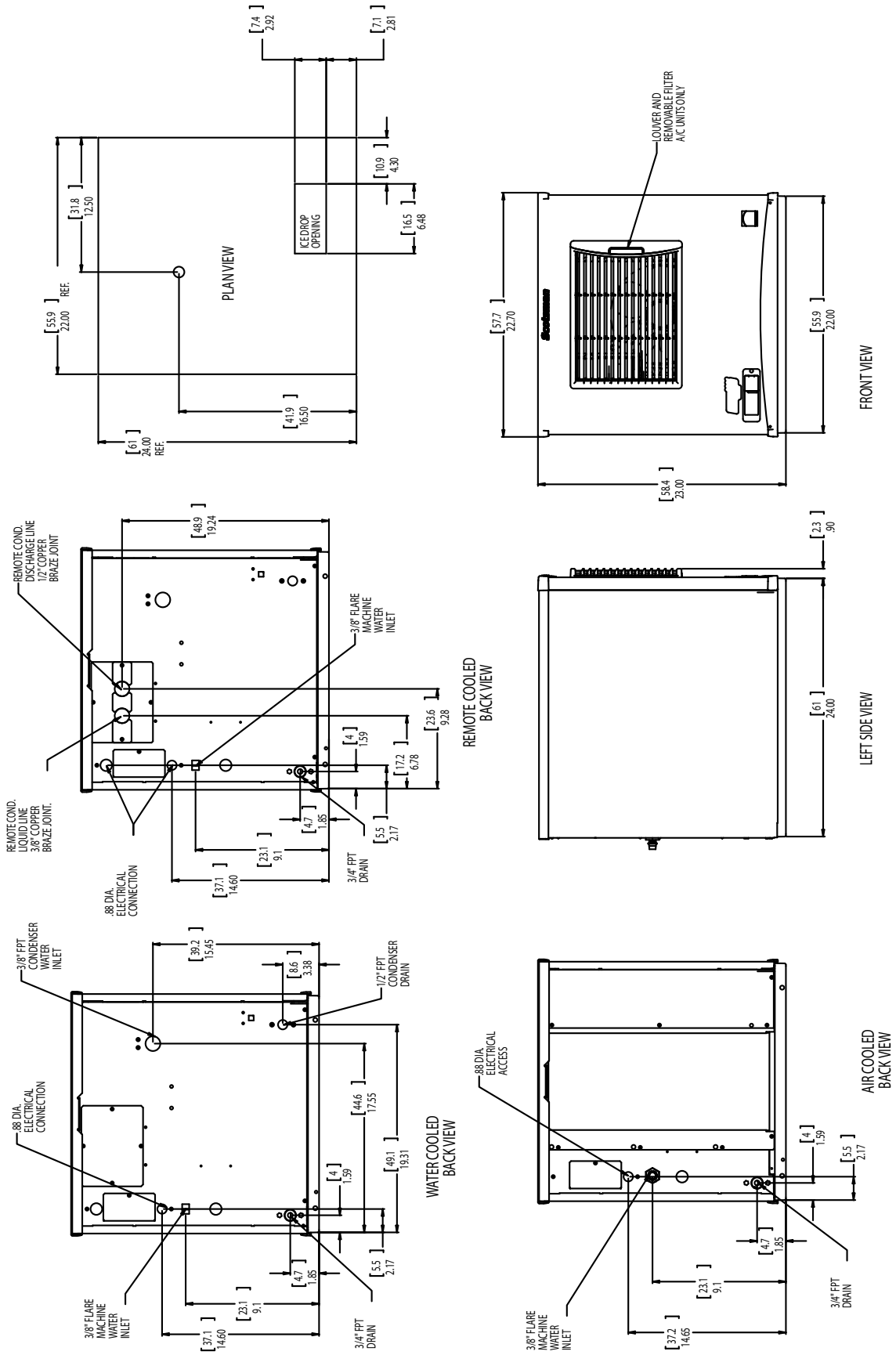

NH0922, NS0922, FS1222, NH1322, NH1322, FS1522 Cabinet Layout

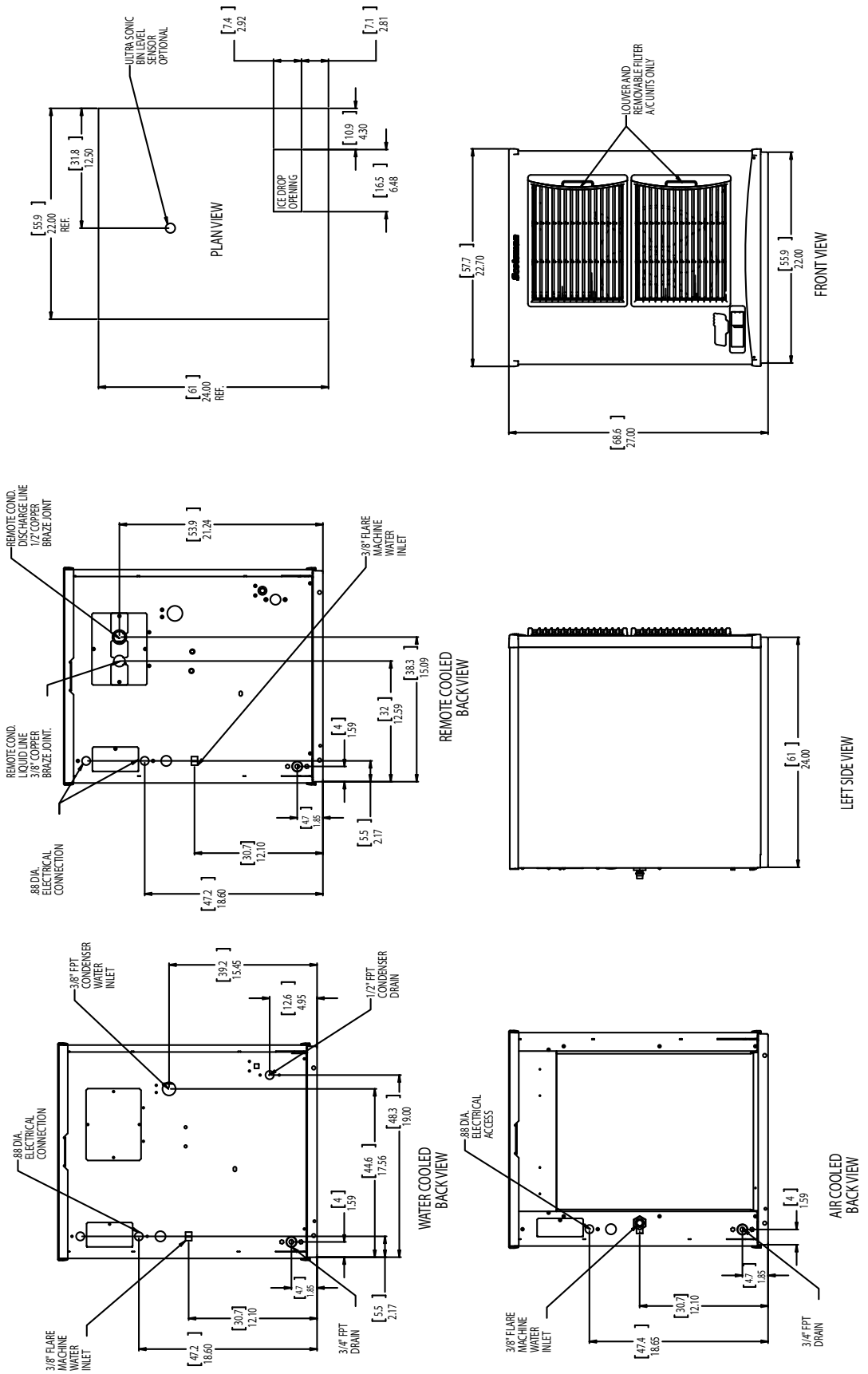

Unpacking & Install Prep

Place on Bin or Dispenser

If reusing an existing bin, be sure that the bin is in good shape and that the gasket tape on the top is not torn up. Water leaks, not covered by warranty, could result from a poor sealing surface. If installing a remote or a remote low side, a new bin is recommended due to the high cost to the user of replacing an old bin when a remote system is on top.

Install the correct adapter, following the directions supplied with that adapter.

Hoist the machine onto the adapter.

Note: The machine is heavy! Use of a mechanical lift is recommended.

Position the machine on the bin or adapter. Secure with straps from the hardware bag packed with the machine, or those supplied with the adapter.

Remove any plastic covering the stainless steel panels.

Note: The standard machine set up includes visible on and off switches. Those can be covered up by changing the bezel in the front panel's trim strip. A cover-up bezel is included with the hardware bag.

Remove any packaging, such as tape or foam blocks, that may be near the gear reducer or ice chute.

Level the bin and ice machine front to back and left to right by using the bin leg levelers.

Panel Removal

1. Locate and loosen the two screws at the bottom of the front panel.

2. Pull the front panel out at the bottom until it clears.

3. Lower the front panel down and off the machine.

4. Remove two screws at the front of the top panel. Lift up the front of the top panel, push the top panel back an inch, then lift to remove.

5. Locate and loosen the screw holding each side panel to the base. Left side panel also has a screw holding it to the control box.

6. Pull the side panel forward to release it from the back panel.

Water

The water supply for ice making must be cold, potable water. There is a single 3/8” male flare potable water connection on the back panel. Water cooled models also have a 3/8” FPT inlet connection for the water cooled condenser. Chilled water can also be used for this connection.

Drain

There is one ¾” FPT condensate drain fitting at the back of the cabinet. Water cooled models also have a ½” FPT discharge drain connection on the back panel.

Tubing

Connect the potable water supply to the potable water fitting, 3/8” OD copper tubing or the equivalent is recommended.

Water filtration is recommended. If there is an existing filter, change the cartridge.

Connect the water cooled water supply to the condenser inlet.

Note: Do NOT filter water to the water cooled condenser circuit.

Connect the drain tube to the condensate drain fitting.

Connect the water cooled condenser drain tube to the condenser outlet.

Do not Tee ice machine drains into the drain tube from the ice storage bin or dispenser. Back ups could contaminate and / or melt the ice in the bin or dispenser.

Follow all local and national codes for tubing, traps and air gaps.

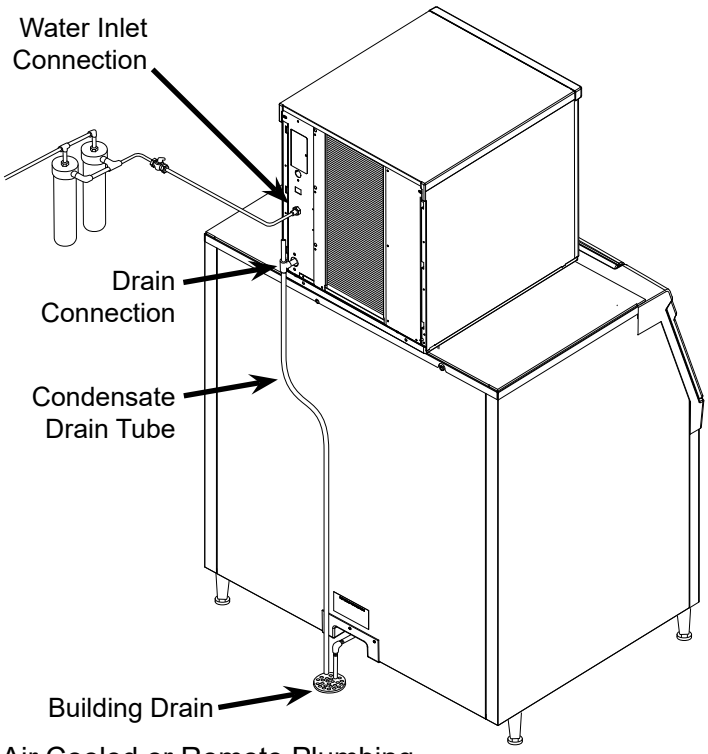

Air Cooled or Remote Plumbing

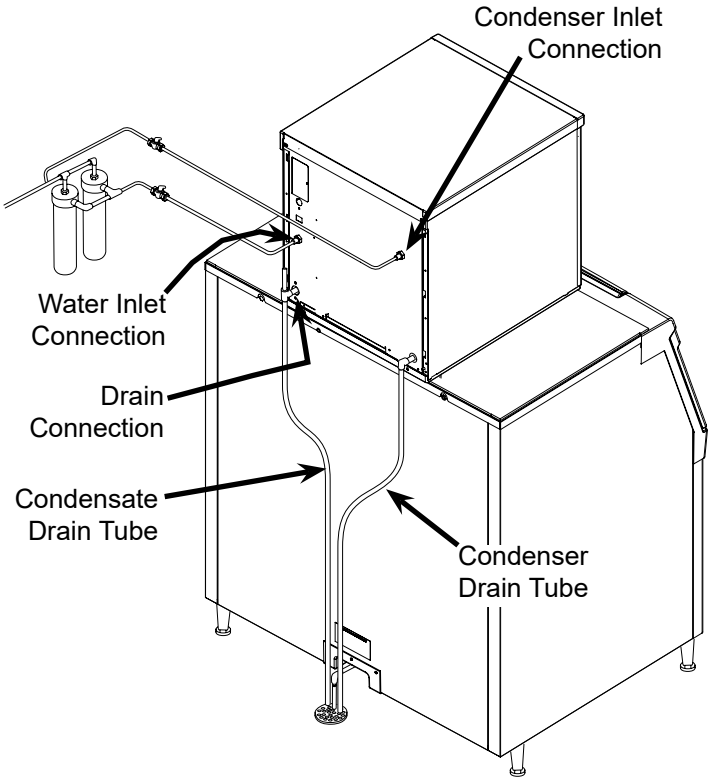

Water Cooled Plumbing

Electrical- All Models

The machine does not include a power cord, one must be field supplied or the machine hard wired to the electrical power supply. The junction box for the electrical connection is on the back panel.

Refer to the dataplate on the machine for minimum circuit ampacity and determine the proper wire size for the application. The dataplate (on the back of the cabinet) also includes the maximum fuse size.

Electrical power is connected to wires inside the junction box in the back of the cabinet. Use a strain relief and connect a ground wire to the ground screw.

Do not use an extension cord.

Follow all local and national codes.

Model	Series	Dimensions w” x d” x h”	Voltage Volts/Hz/Phase	Condenser Type	Min Circuit Ampacity	Max Fuse Size or HACR Type Circuit Breaker
NH0422AX-1	A	22 x 24 x 23	115/60/1	Air	11.1	15
NH0422WX-1	A	22 x 24 x 23	115/60/1	Water	10.3	15
NS0422AX-1	A	22 x 24 x 23	115/60/1	Air	11.1	15
NS0422WX-1	A	22 x 24 x 23	115/60/1	Water	10.3	15
FS0522AX-1	A	22 x 24 x 23	115/60/1	Air	11.1	15
FS0522WX-1	A	22 x 24 x 23	115/60/1	Water	10.3	15
NH0622AX-1	A	22 x 24 x 23	115/60/1	Air	14.8	20
NH0622WX-1	A	22 x 24 x 23	115/60/1	Water	13.2	15
NS0622AX-1	A	22 x 24 x 23	115/60/1	Air	14.8	20
NS0622WX-1	A	22 x 24 x 23	115/60/1	Water	13.2	15
FS0822AX-1	A	22 x 24 x 23	115/60/1	Air	14.8	20
FS0822WX-1	A	22 x 24 x 23	115/60/1	Water	13.2	15
NH0922AX-32	A	22 x 24 x 27	208-230/60/1	Air	10.6	15
NH0922WX-32	A	22 x 24 x 27	208-230/60/1	Water	9.5	15
NS0922AX-32	A	22 x 24 x 27	208-230/60/1	Air	10.6	15
NS0922WX-32	A	22 x 24 x 27	208-230/60/1	Water	9.5	15
FS1222AX-32	A	22 x 24 x 27	208-230/60/1	Air	10.6	15
FS1222WX-32	A	22 x 24 x 27	208-230/60/1	Water	9.5	15
NH1322AX-32	A	22 x 24 x 27	208-230/60/1	Air	14.8	20
NH1322WX-32	A	22 x 24 x 27	208-230/60/1	Water	13.6	20
NS1322AX-32	A	22 x 24 x 27	208-230/60/1	Air	14.8	20
NS1322WX-32	A	22 x 24 x 27	208-230/60/1	Water	13.6	20
FS1522AX-32	A	22 x 24 x 27	208-230/60/1	Air	14.8	20

Refrigeration - Remote Condenser Models

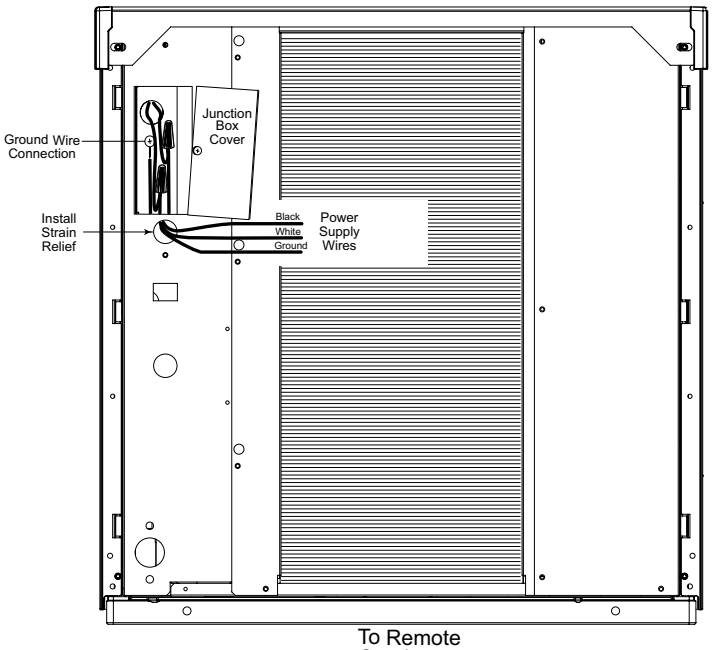

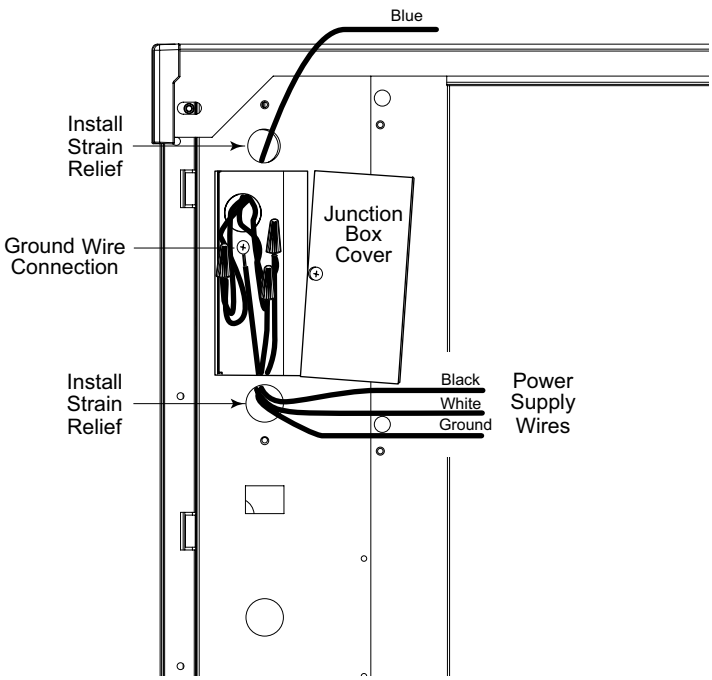

Remote condenser models have additional installation needs.

The correct remote condenser fan and coil must be connected to the ice making head. Liquid and discharge tubing connections are on the back of the ice machine cabinet. Tubing kits are available in several lengths to accommodate most installations. Order the one that just exceeds the length needed for the installation.

The kit numbers are:

BRTE10, BRTE25, BRTE40, BRTE75

There are limits as to how far away from the ice machine and where the remote condenser can be located. See page 11 for those limits.

The correct condenser must be used:

Ice Machine Model	Voltage	Condenser Model
NH0622RX-1 NS0622RX-1 FS0822RX-1 NH0922RX-1 NS0922RX-1	115	ERC111-1
NH0922RX-32 NS0922RX-32 FS1222RX-32 FS1222RX-3	208-230	ERC311-32
NH1322RX-32 NS1322RX-32	208-230	ERC311-32

Do not reuse condenser coils contaminated with mineral oil (used with R-502 for example). They will cause compressor failure and will void the warranty.

A headmaster is required for all remote condenser systems. Installation of headmaster kit KPFHM will be required if any of the following condensers are being used:

ERC101-1, ERC151-32, ERC201-32, ERC301-32, ERC402-32

Use of non-Scotsman condensers requires pre-approval from Scotsman Engineering.

Remote Condenser Location - Limits

Use the following for planning the placement of the condenser relative to the ice machine

Location Limits - condenser location must not exceed ANY of the following limits:

- Maximum rise from the ice machine to the condenser is 35 physical feet
- Maximum drop from the ice machine to the condenser is 15 physical feet
- Physical line set maximum length is 100 feet.
- Calculated line set length maximum is 150.

Calculation Formula:

- Drop = dd x 6.6 (dd = distance in feet)
- Rise = rd x 1.7 (rd = distance in feet)
- Horizontal Run = hd x 1 (hd = distance in feet)
- Calculation: Drop(s) + Rise(s) + Horizontal
- Run = dd+rd+hd = Calculated Line Length

Configurations that do NOT meet these requirements must receive prior written authorization from Scotsman to maintain warranty.

Do NOT:

- Route a line set that rises, then falls, then rises.
- Route a line set that falls, then rises, then falls.

Calculation Example 1:

The condenser is to be located 5 feet below the ice machine and then 20 feet away horizontally.

5 feet x 6.6 = 33. 33 + 20 = 53. This location would be acceptable

Calculation Example 2:

The condenser is to be located 35 feet above and then 100 feet away horizontally. 35 x 1.7 = 59.5.

59.5 +100 = 159.5. 159.5 is greater than the 150 maximum and is NOT acceptable.

Operating a machine with an unacceptable configuration is misuse and will void the warranty.

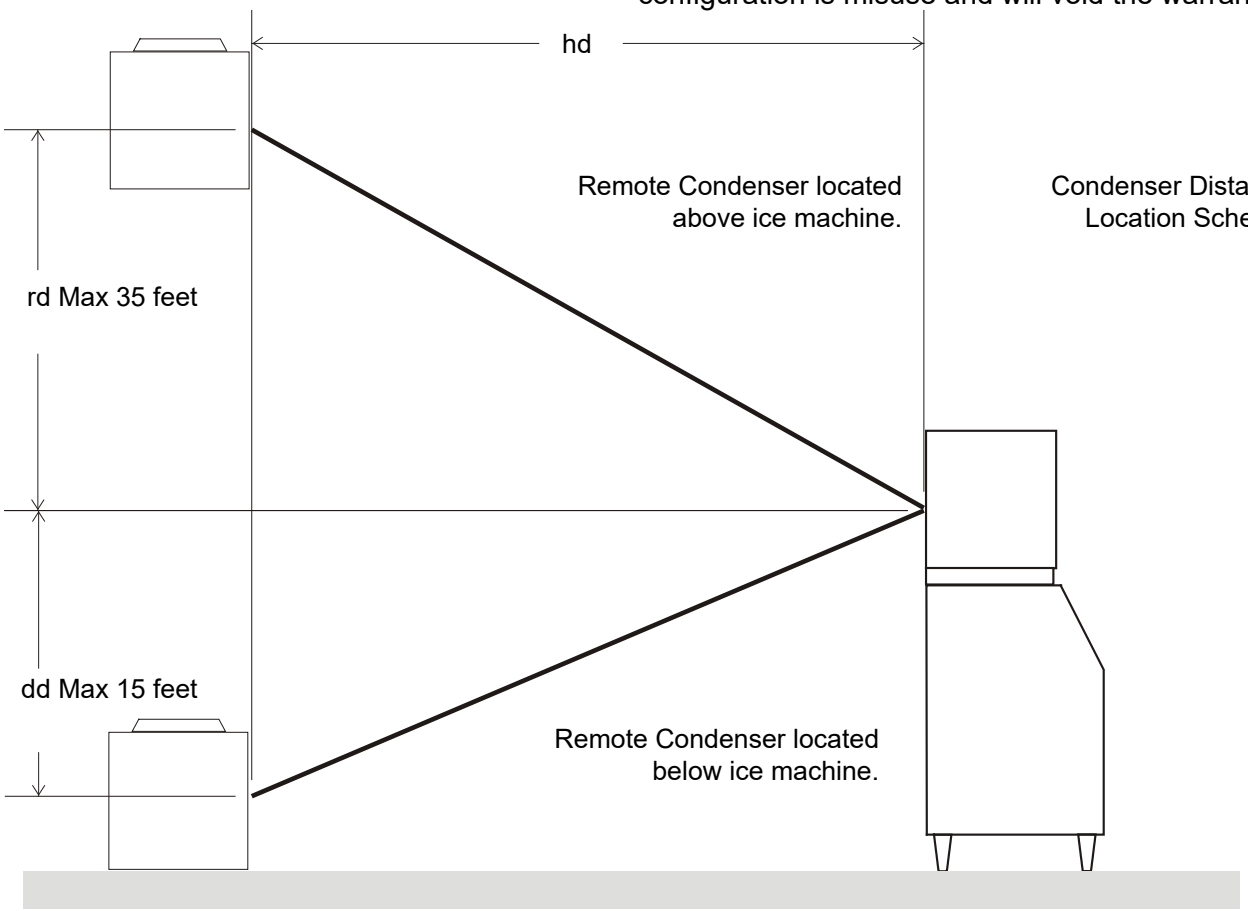

For The Installer: Remote Condenser

Locate the condenser as near as possible to the interior location of the ice machine. Allow it plenty of space for air and cleaning: keep it a minimum of two feet away from a wall or other rooftop unit.

Note: The location of the condenser relative to the ice machine is LIMITED by the specification on the prior page.

Roof penetration. In many cases a roofing contractor will need to make and seal the hole in the roof for the line sets. The suggested hole diameter is 2 inches.

Meet all applicable building codes.

Roof Attachment

Install and attach the remote condenser to the roof of the building, using the methods and practices of construction that conform to the local building codes, including having a roofing contractor secure the condenser to the roof

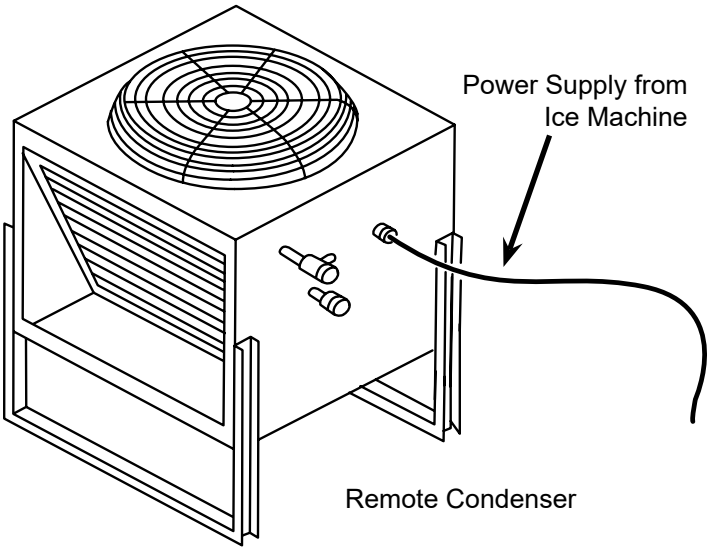

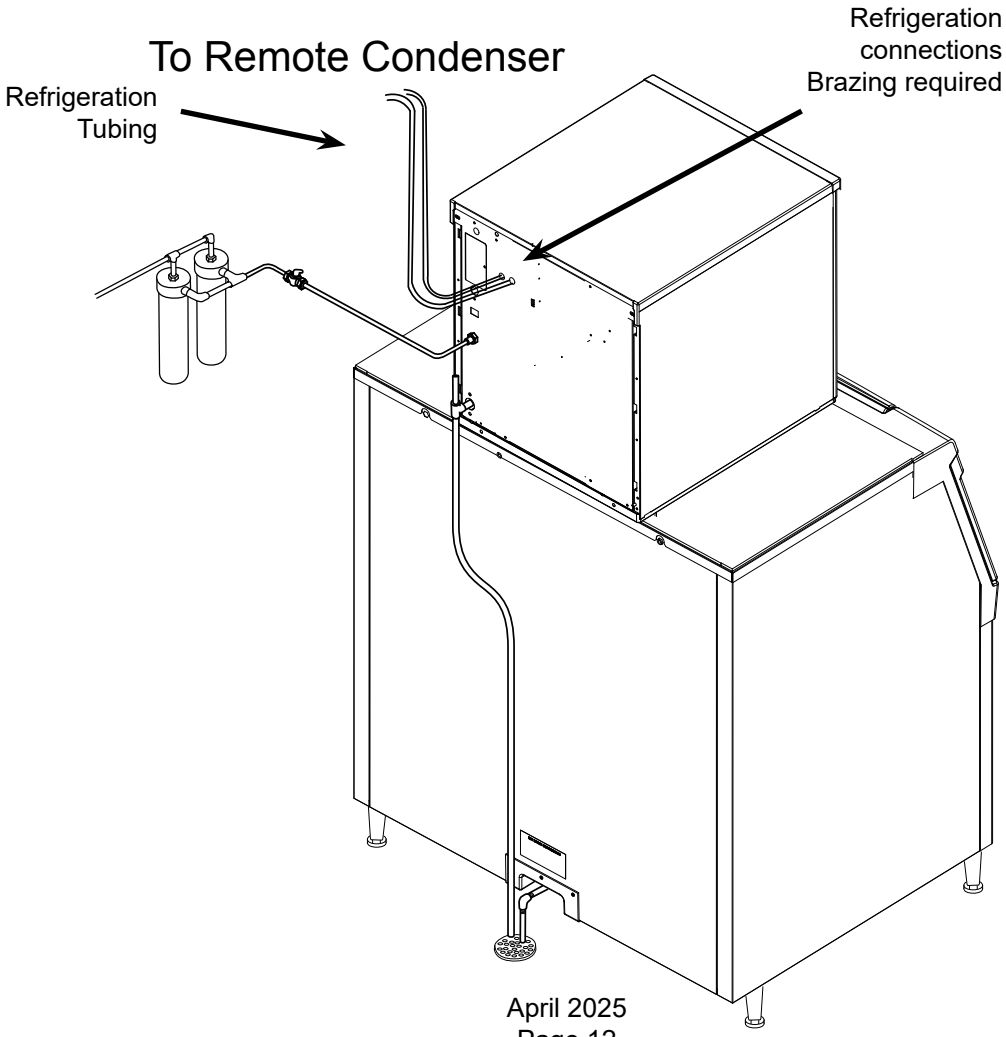

Line Set Routing and Brazing (applies to remote units only)

Do not connect the refrigeration tubing until all routing and forming of the tubing is complete. See the Coupling Instructions for final connections.

1. Each set of tubing lines contains a 3/8” diameter liquid line, and a 1/2” diameter discharge line. Both ends of each line are designed for field brazed connections.

Note: The openings in the building ceiling or wall, listed in the next step, are the minimum sizes recommended for passing the refrigerant lines through.

2. Have the roofing contractor cut a minimum hole for the refrigerant lines of 2”. Check local codes, a separate hole may be required for the electrical power supply to the condenser.

Caution: Do NOT kink the refrigerant tubing while routing it.

3. Route the refrigerant tubes thru the roof opening. Follow straight line routing whenever possible. Excess tubing must be cut to proper length prior to connecting to the ice maker and condenser.

4. The tubing must be evacuated after connection to the ice maker or condenser before opening the ball valve.

5. Have the roofing contractor seal the holes in the roof per local codes

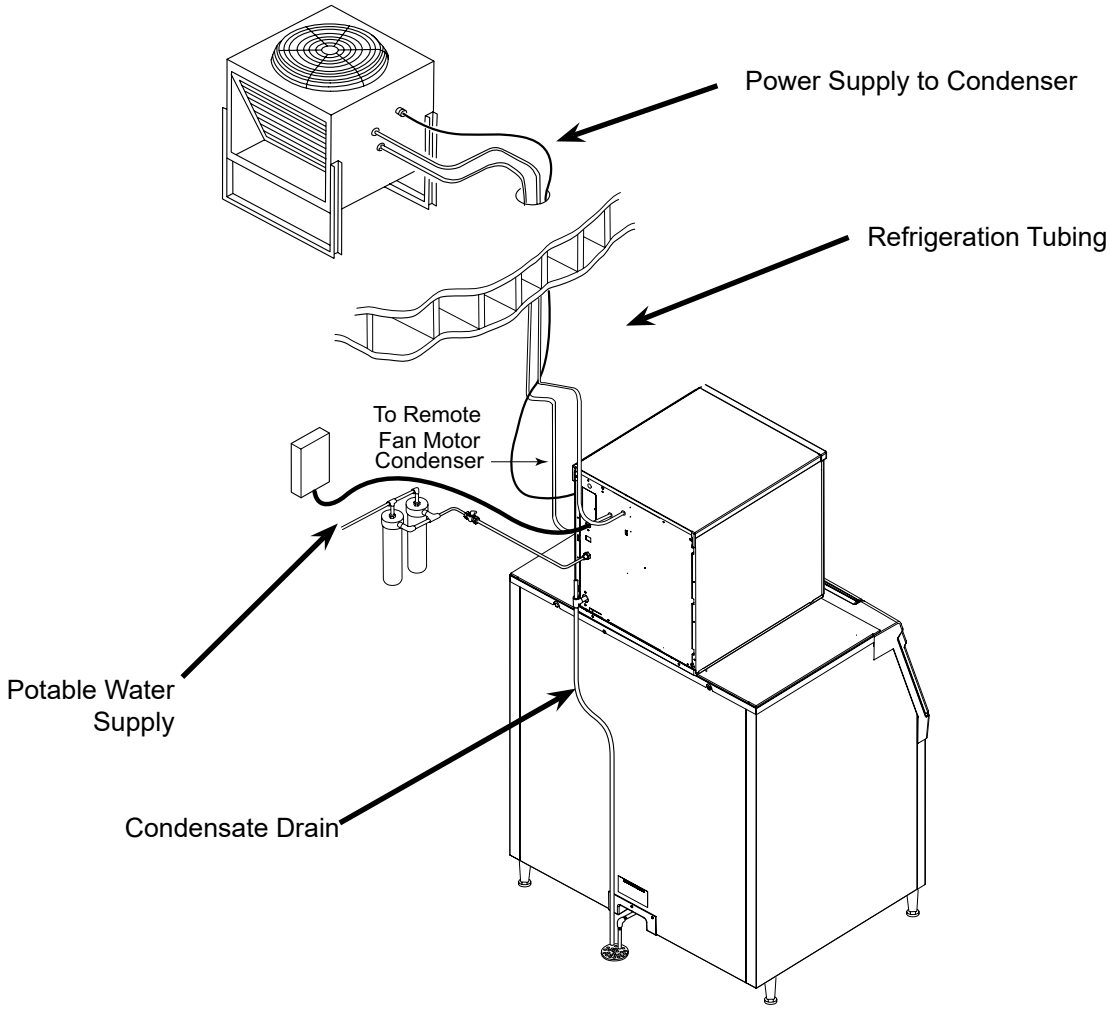

Line Set Routing and Brazing

Do not connect the refrigerant tubing until all routing and forming of the tubing is complete. Final connections requires brazing, steps must be performed by an EPA certified type II or higher technician.

The Lineset of tubing contains a 3/8” diameter liquid line, and a 1/2” diameter discharge line.

Note: The openings in the building ceiling or wall, listed in the next step, are the minimum sizes recommended for passing the refrigerant lines through.

Have the roofing contractor cut a minimum hole for the refrigerant lines of 1 3/4”. Check local codes, a separate hole may be required for the electrical power supply to the condenser.

Caution: Do NOT kink the refrigerant tubing while routing it.

At Condenser:

1. Remove protective plugs from both connections and vent the nitrogen from the condenser.
2. Remove the tubing access bracket to allow more room for brazing.
3. Route the lineset tubes to there connection.
4. Clean tubing ends and position into stubs.

Note: Be sure tube and stubs are round, dress with swage tool if needed.

At Head:

1. Remove the tubing access bracket to allow more room for brazing.
2. Confirm connection ball valves are fully closed.
3. Remove protective plugs from both connections.
4. Remove caps from access valve connections.
5. Remove cores from access valves.
6. Connect refrigeration hoses to access valves.
7. Connect dry nitrogen source to liquid line connection.
8. Shorten tubing to correct length, clean ends and insert them into valve stubs.

Note: Be sure tube and stubs are round, dress with swage tool if needed.

9. Add heat sink material to ball valve body.
10. Open nitrogen and flow 1 psi nitrogen into liquid line tube and braze the liquid line and suction line tubes to the valve stubs.
11. With nitrogen flowing braze the liquid and suction line connections.

At Condenser:

1. Braze the liquid and suction line connections.

At Head:

1. Remove nitrogen source.
2. Return valve cores to access valves.
3. Connect vacuum pump to **both** access valves and evacuate the tubing and head to at least a 300 micron level.
4. Remove vacuum pump and add R-290 to all three tubes to provide a positive pressure.
5. Leak check the all braze connections and repair any leaks.
6. Open both valves to full open.

Note: The full refrigerant charge is contained in the receiver of the ice machine.

Water - Remote Models

The water supply for ice making must be cold, potable water. There is a single 3/8” male flare potable water connection on the back panel.

Backflow

The design of the float valve and reservoir prevents potable water backflow by means of a 1" air gap between the reservoir's maximum water level and the float valve water inlet orifice.

Drain

There is one 3/4” FPT condensate drain fitting at the back of the cabinet.

Attach Tubing

1. Connect the potable water supply to the potable water fitting, 3/8” OD copper tubing or the equivalent is recommended.
2. Change the cartridge on the existing water filter (if any present).
3. Connect the drain tube to the condensate drain fitting. Use rigid tubing.
4. Vent the drain tubing between the ice machine and the building drain.

Do not Tee ice machine drains into the drain tube from the ice storage bin or dispenser. Back ups could contaminate and/or melt the ice in the bin or dispenser. Be sure to vent the bin drain.

Follow all local and national codes for tubing, traps and air gaps.

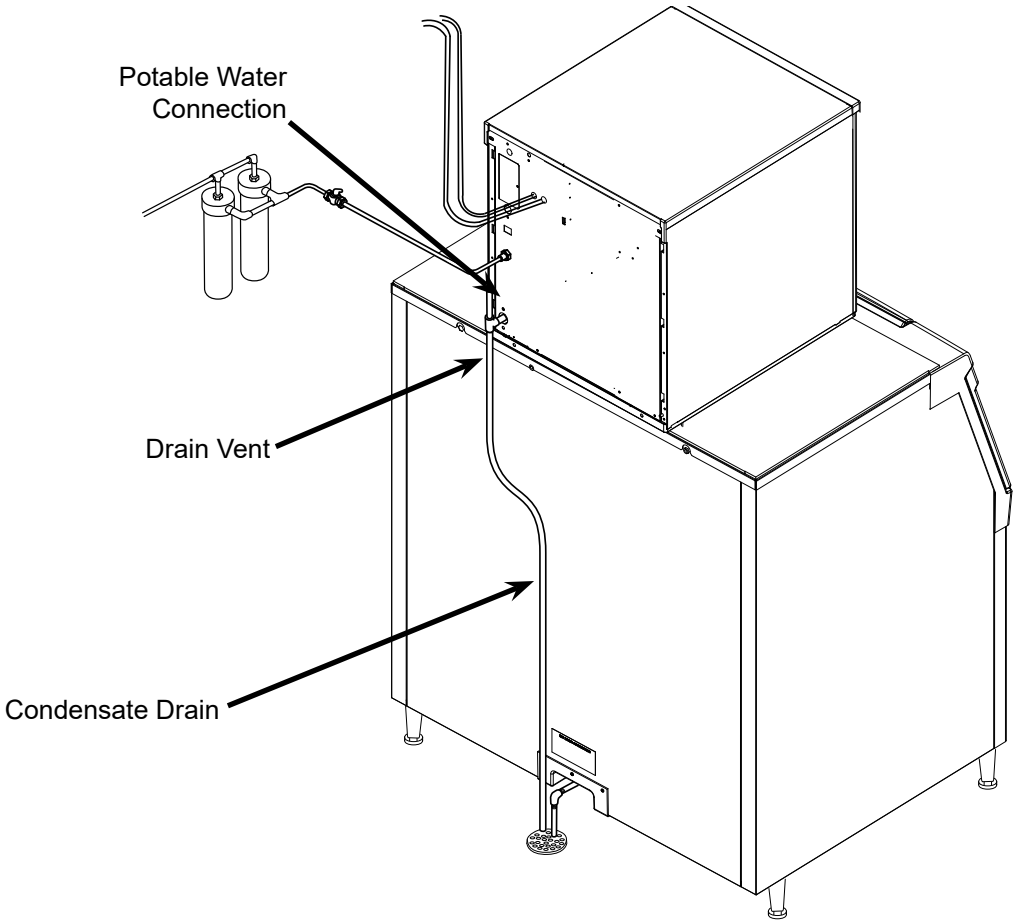

Final Check List

After connections:

1. Wash out the bin. If desired, the interior of the bin could be sanitized.
2. Locate the ice scoop (if supplied) and have it available for use when needed.
3. Remote only: Switch on the electrical power to warm up the compressor. Do not start the machine for 4 hours.

Final Check List:

1. Is the unit located indoors in a controlled environment?
2. Is the unit located where it can receive adequate cooling air?
3. Has the correct electrical power been supplied to the machine?
4. Have all the water supply connections been made?
5. Have all the drain connections been made?
6. Has the unit been leveled?
7. Have all unpacking materials and tape been removed?
8. Has the protective covering on the exterior panels been removed?
9. Is the water pressure adequate?
10. Have the drain connections been checked for leaks?
11. Has the bin interior been wiped clean or sanitized?
12. Have any water filter cartridges been replaced?
13. Have all required kits and adapters been properly installed?

Control and Machine Operation

Once started, the ice machine will automatically make ice until the bin or dispenser is full of ice. When ice level drops, the ice machine will resume making ice.

Caution: Do not place anything on top of the ice machine, including the ice scoop. Debris and moisture from objects on top of the machine can work their way into the cabinet and cause serious damage. Damage caused by foreign material is not covered by warranty.

There are four indicator lights at the front of the machine that provide information on the condition of the machine: **Power, Status, Water, De-scale & Sanitize.**

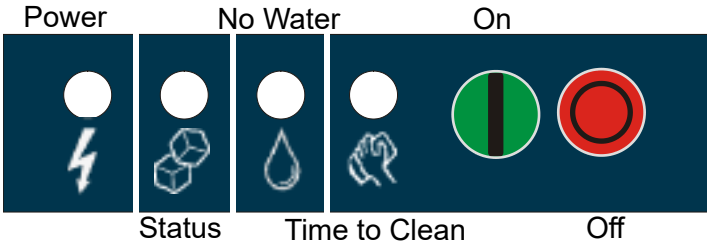

Note: If the De-Scale & Sanitize light is ON, following the cleaning process will clear the light for another cleaning time internal.

Two button switches are at the front – On and Off. To switch the machine OFF, push and release the Off button. The machine will shut off at the end of the next cycle. To switch the machine ON, push and release the On button. The machine will go through a start up process and then resume ice making.

Lower Light and Switch Panel

This user accessible panel provides important operational information and duplicates the lights and switches on the controller. It also allows access to the On and Off buttons that operate the ice machine.

Sometimes access to the switches should be limited to prevent unauthorized operation. For that purpose a fixed panel is shipped in the hardware package. The fixed panel cannot be opened.

To install the fixed panel:

1. Remove the front panel and remove the bezel.
2. Spread the bezel frame open and remove original door, insert fixed panel into bezel. Be sure it is in the closed position.
3. Return bezel to panel and install panel on unit.

Controller

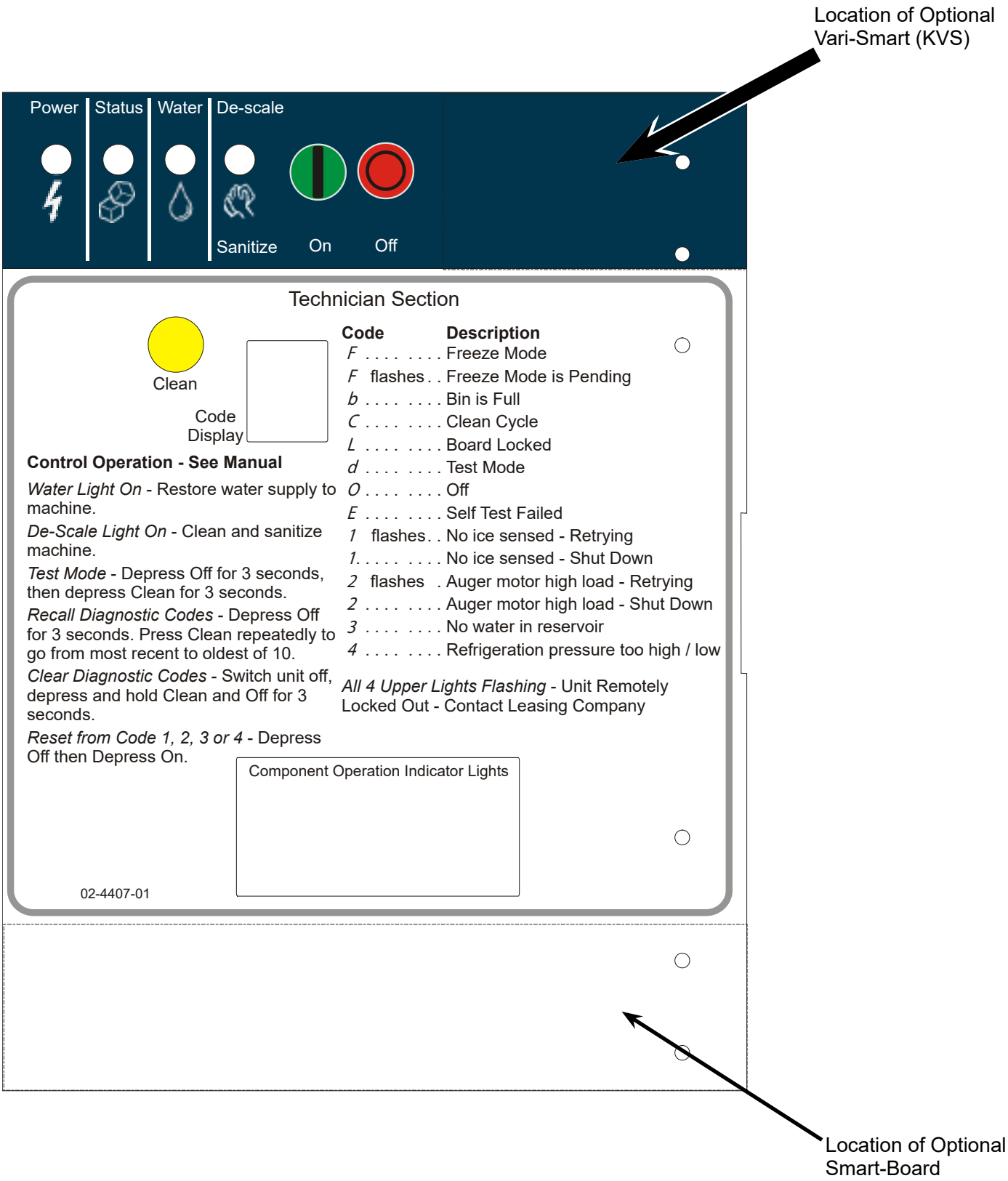
Location of Optional Vari-Smart (KVS)
Power
Status
Water
De-scale
Sanitize
On
Off
Technician Section
Clean
Code Display
Code
Description
F . . . . . Freeze Mode
F flashes . . Freeze Mode is Pending
b . . . . . Bin is Full
C . . . . . Clean Cycle
L . . . . . Board Locked
d . . . . . Test Mode
O . . . . . Off
E . . . . . Self Test Failed
1 flashes . . No ice sensed - Retrying
1. . . . . No ice sensed - Shut Down
2 flashes . Auger motor high load - Retrying
2 . . . . . Auger motor high load - Shut Down
3 . . . . . No water in reservoir
4 . . . . . Refrigeration pressure too high / low
Control Operation - See Manual
Water Light On - Restore water supply to machine.
De-Scale Light On - Clean and sanitize machine.
Test Mode - Depress Off for 3 seconds, then depress Clean for 3 seconds.
Recall Diagnostic Codes - Depress Off for 3 seconds. Press Clean repeatedly to go from most recent to oldest of 10.
Clear Diagnostic Codes - Switch unit off, depress and hold Clean and Off for 3 seconds.
Reset from Code 1, 2, 3 or 4 - Depress Off then Depress On.
All 4 Upper Lights Flashing - Unit Remotely Locked Out - Contact Leasing Company
Component Operation Indicator Lights
02-4407-01
Location of Optional Smart-Board

AutoAlert and Display Code

The controller uses indicator lights to provide the user with information on Power, Status, Water or Time to Clean. These are known as the AutoAlert panel.

Additionally a 7 segment display is under the front panel. It shows operational status or problem codes.

The Power light is on Green anytime the machine is supplied with electrical power.

The Status light is on Green when the machine has been switched to the ice making mode. It will also blink green if the unit has been equipped with an optional Smart-Board AND the Smart-Board has detected potential malfunction.

The Water light will blink Red if the water sensor does not detect water.

The De-Scale / Sanitize light will glow Yellow when the time to clean timer has reached its set time since the last cleaning. It also blinks during the first part of the cleaning mode

Code Description

F. . . . . Freeze Mode

F flashes . . Freeze Mode is Pending

b. . . . . Bin is Full

C. . . . . Clean Cycle

L. . . . . Board Locked

d. . . . . Test Mode

0. . . . . Off

E. . . . . Self Test Failed

1 flashes. . No ice sensed - Retrying

1. . . . . No ice sensed - Shut Down

2 flashes . Auger motor high load - Retrying

2. . . . . Auger motor high load - Shut Down

3. . . . . No water in reservoir

4. . . . . Refrigeration pressure too high / low

Component Indicator Lights

The controller has six lights to indicate component operation:

Bin Eyes Blocked

• This light is ON when the photo-electric ice sensors have been blocked by ice.

Water Present

• This light is ON when the water sensor has water touching it.

Comp

• This light is ON when the compressor is operating.

Water Dispense

• Not used on this model., not listed on D series

Auger

• This light is ON when the auger motor is operating.

Ice Dispense

• Not used this model, not listed on D series

Control Button Use

Recall diagnostic code:

• Hold off button in for 3 seconds. Release.

• Press and release the Clean button to cycle through each of the last 10 error codes from most recent to oldest.

Clear diagnostic code:

• Hold Clean and Off buttons in for 3 seconds to clear all prior codes.

Reset control:

• Depress and release Off, then depress and release On

Start Test Mode:

• Hold Off button in for 3 seconds. Release.

• Hold Clean button in for 3 seconds. Release.

Lock / Unlock control:

• Hold On button in for 3 seconds, keep holding then press and release Off twice.

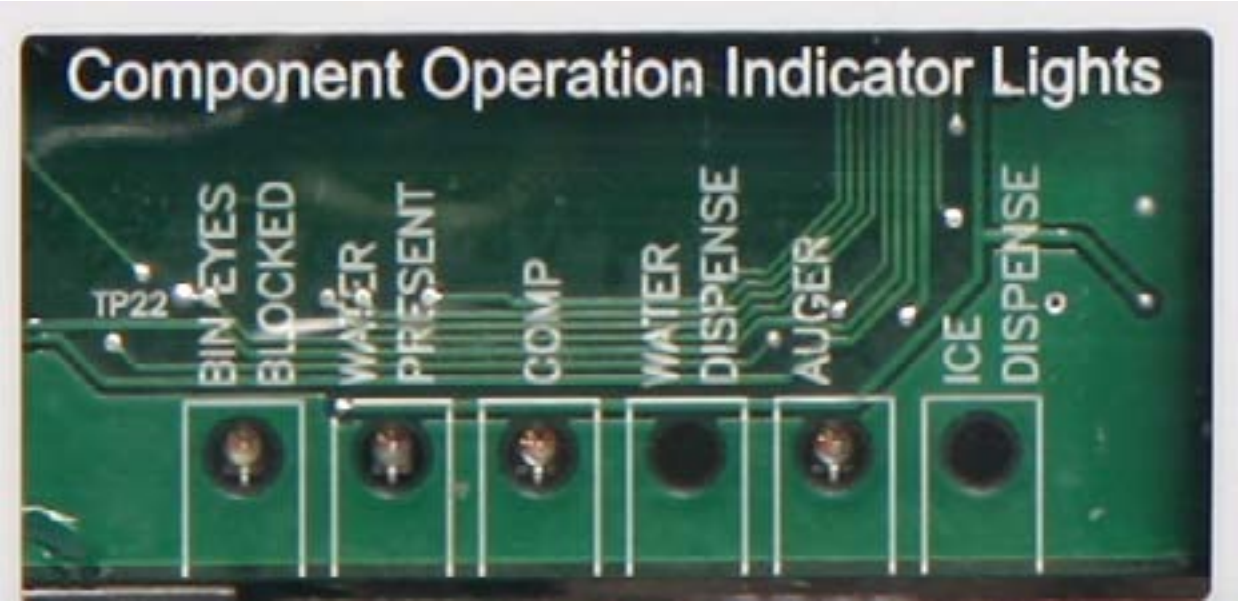

Electrical Component Details

Compressor

- Operated by the compressor contactor.

Contactor

- Operated by the controller. Line voltage coil. When energized the Compressor indicator light will be ON.

Fan Motor(s)

- Operated by the contactor

High pressure cut out

- All models have a high pressure cut out switch that signals the controller if the discharge pressure is too high. It is an automatic reset.

Low pressure switch

- On remote models it controls the compressor contactor. Will close on pressure rise, pressure rises when liquid line valve opens.

Opens at a lower pressure.

- Air and Water cooled models use a low pressure cut out.

Liquid line valve

- Remote only. Opened by the controller to start ice making. Closed to shut unit off. Line voltage coil.

Controller

- Senses water, ice making, discharge pressure, low side pressure, and auger amps. Controls compressor contactor, fan motor, and auger motor. Indicates status and component operation.

Transformer

- 12 volt secondary, supplies power to controller only. The Power light will be ON when the transformer has provided 12 volts AC to the controller.

Water Level Sensor

- Two probe conductivity sensor. When water touches it the Water Present light will be ON.

Auger Motor

- Four pole, split phase motor that operates the gear reducer. When operating, the Auger indicator light will be ON. The gear reducer lowers the input speed from about 1500 RPM to about 11-13 RPM. Auger rotation is counter clockwise when viewed from above.

Photo-electric eyes

- An LED emitter and photo transistor receiver set. Pulsed infrared light is continuously emitted and received to detect ice in the chute.

Lower light and switch panel

- Duplicates controller lights and switches.

Refrigeration

Refrigerant: R-290

Compressors: Copeland, Embraco, or Tecumseh hermetic by model

Expansion valve: Adjustable, internally equalized.

Condensers: Air is forced draft type, water cooled is counterflow type.

Air filters: Surface mounted to panels. Filter media removable without removing panels.

Fan blades: Reduced vibration blades in most air cooled models.

Remote Systems: Head pressure control valve in condenser. Headmaster protected by filters (not filter driers). Controller pumps unit down by closing the liquid line valve. Pump down switch controls the compressor.

High pressure cut out. WC, RC, AC

Low pressure cut out, WC, AC

Pump down pressure switch, RC

Evaporator: Coil-wrapped stainless steel with a stainless steel, double-flight auger inside.

Initial Start Up

1. Turn the water supply on.

2. Switch the electrical power on. Confirm voltage is correct for the model.

3. Push and release the On button. The machine will start in about two minutes.

4. Soon after starting, air cooled models will begin to blow warm air out the back of the cabinet and water cooled models will drain warm water from the condenser drain tube. Remote models will be discharging warm air from the remote condenser. After about 5 minutes, ice will begin to drop into the bin or dispenser.

5. Check the machine for unusual rattles. Tighten any loose screws, be sure no wires are rubbing moving parts. Check for tubes that rub.

6. Fill out the warranty registration form and either file it on line or mail it.

7. Notify the user of the maintenance requirements and whom to call for service.

Change De-Scale Notification Interval

This feature is accessible only from standby

(Status Light Off).

1. Press and hold Clean button for 3 seconds. This starts the Time to Clean Adjustment State and displays the current time to clean setting.

2. Press the clean button repeatedly to cycle through the 4 possible settings:

• 1 year (8760 hours)

• 0 (disabled)

• 4 months (2920 hrs)

• 6 months (4380 hours) (default)

3. Push Off to confirm the selection.

Sequence of Operation

The ice machine's function is to continuously produce ice until the ice level control senses that there is enough ice in the bin or dispenser. There are three systems that operate in close coordination to make ice. They are the electrical system, the water system and the refrigeration system.

The electrical system includes the compressor, auger drive assembly, fan motor and control system (the auger drive assembly includes the gear reducer, auger and top bearing).

The water system includes the float valve, reservoir, inside of the evaporator and the drain tubing.

The refrigeration system includes the compressor, condenser, expansion valve and outside of the evaporator.

Control System

As noted, the electrical system includes a control system. The control system consists of a controller and sensors. It automatically operates the machine to make ice only when needed. It also monitors the refrigeration system, water system and auger drive assembly for proper function.

Sensors are used to monitor the machine. A continuity probe water sensor is located near the float reservoir. A tube from the float tank allows water to touch the sensor's two stainless steel probes, making a connection between them. That signals to the controller the presence of water. The controller will not allow the machine to make ice unless this sensor's probes have continuity.

A set of photo-electric eyes (infrared emitter and receiver) is located at the base of the ice discharge chute. They are used to sense ice. As ice is made, it falls through the infrared beam from the emitter, causing the receiver to detect it. When ice has filled the bin, the top of the ice pile will continuously stop the beam, breaking the light to the receiver, and that signals to the controller that the bin is full

Additionally, the control system uses the photo-eyes to confirm ice making. As the machine makes ice, the falling ice causes breaks in the infrared beam. In operation, the first 6 minutes of ice making are ignored to give the machine time to start producing ice. After that, the controller will look for a minimum of one beam-break in 10 minutes. If this is not achieved, the control will shut the machine down for 10 minutes and add the incident to a strike counter. During the wait period, a 1 will be flashing in the code display.

After the 10 minute wait, the machine will restart. If no ice is sensed three times in a row, the machine will shut down on a no ice error and must be manually reset. The 1 in the code display will change from flashing to continuous.

If ice is detected within 10 minutes after any restart, the strike counter will be reset to zero, and the code display will show F, for freeze mode.

The auger drive motor amperage is monitored by the controller. If the auger motor is overloaded and is drawing too many amps, the controller will shut the machine off, and a 2 will be flashing in the code display. The controller will attempt a restart of the auger motor in 4 minutes. If during the first 60 seconds after restart the auger motor current stays within limits, the compressor is restarted and the machine returns to normal operation. If the auger motor's current is excessive within 60 seconds after the restart, the process will be repeated once more. If during that try the current is still excessive the machine shuts down and must be manually reset. The 2 in the code display will change from flashing to continuous.

Water System

The water level in the evaporator is maintained by a float valve in a separate reservoir. As ice is made, and water is used, the water level in the reservoir drops, opening the float valve. The open valve adds water to the reservoir to resupply it.

Refrigeration System

The refrigeration system is monitored by the high pressure cut out switch. If the refrigeration discharge pressure exceeds the pre-set point of the switch, it will open, causing the controller to shut the machine off. The discharge pressure control is an automatic reset switch, and after the discharge pressure drops, the controller will restart the unit. A 4 in the code display indicates high discharge pressure.

The refrigeration system is also monitored by the low pressure cut out switch. If the refrigeration low side pressure drops below a pre-set point, the switch will open. When that occurs, the controller will shut the machine off. The low pressure cut out switch is an automatic reset switch and after the low side pressure increases to the cut in point, the controller will restart the machine. A 4 will show in the code display to indicate low suction pressure.

Note: the low pressure control for a remote is a pump down switch, and when it opens the compressor stops and no change is noted by the controller

Electrical Sequence

Pushing and releasing the On button starts the machine. The sequence of operation begins with water. Water must be sensed or the controller will not start the ice making process. If there is no water, a 3 will show it the code display. If there is water, and there is nothing blocking the infrared beam of the ice sensors, the controller will start the machine. A flashing F will show in the code display while the auger drive motor starts up. When it has started, the compressor will start and the flashing F will change to a continuous F. This continues until the ice level control senses a full bin, at that time the compressor is shut off, and the auger motor continues to operate for a short time to clear the evaporator of any left over ice. A lowercase “b” will show in the code display.

	Indicator Lights & Their Meanings			
	Power	**Status**	**Water**	**De-Scale & Sanitize**
Steady Green	Normal	Normal	-	-
Blinking Green	Self Test Failure	Switching on or off. When Smart-Board used, machine attention recommended.	-	-
Blinking Red	-	Diagnostic shut down	Lack of water	-
Yellow	-	-	-	Time to descale and sanitize
Blinking Yellow	-	-	-	In Cleaning Mode
Light Off	No power	Switched to Off	Normal	Normal

Water System

Water enters the machine through the 3/8" male flare at the rear of the cabinet, goes to the water reservoir which it enters through the float valve.

The float valve maintains a constant level of water in the reservoir and evaporator, as water flows out the bottom of the reservoir tank to fill the evaporator.

Reservoir overflow or evaporator condensation is routed to the drain. Water cooled models have a separate water circuit for the cooling water: it enters the fitting at the rear, goes to the water regulating valve, then to the water cooled condenser and down the drain.

Water Level: The correct water level should be checked when the machine is making ice. Check the water level in the reservoir and compare it to the horizontal line molded into the side of the reservoir.

The correct level should be between 1/8” above and 1/4” below the line. If needed, bend the float arm up or down to adjust the water level.

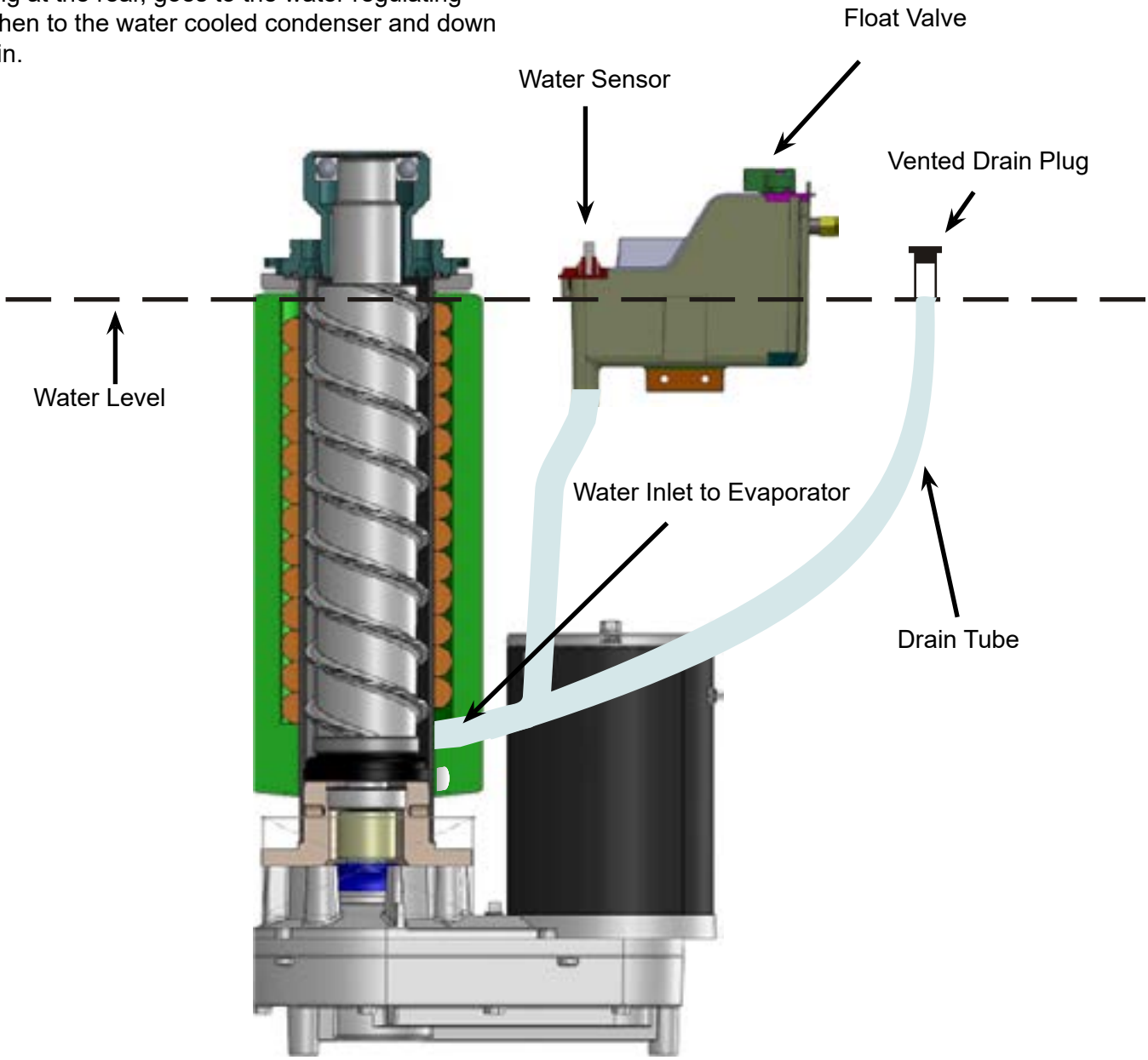

Water System Schematic

Air Cooled Refrigeration

The compressor concentrates the heat from ice making into high pressure, hot discharge gas. The high pressure forces the gas to the water cooled condenser.

At the condenser, refrigerant gas flows through a serpentine tube that is connected to fins. Room air is forced by a fan motor through the fins. As the relatively cooler air comes in contact with the fins and tubing, heat flows from the hot refrigerant gas into the fins and tubing and into the cooler air passing over them. When the refrigerant cools, it condenses into a liquid.

From the condenser the high pressure liquid refrigerant flows through the liquid line to the metering device - a thermostatic expansion valve.

At the expansion valve, liquid refrigerant passes from a high pressure zone to one of relatively low pressure, and in the low pressure zone it evaporates.

The low pressure zone where the refrigerant evaporates is the evaporator. The evaporator is a vertical metal tube surrounded by a coil of tubing, which the refrigerant flows through. As refrigerant evaporates in the coil, it absorbs heat from the metal parts of the evaporator and the water inside it. As the auger inside the evaporator turns, ice is continuously forced out of the evaporator and make up water flows in.

From the evaporator, the refrigerant, carrying the heat from ice making, flows back to the compressor through the suction line, and the cycle continues

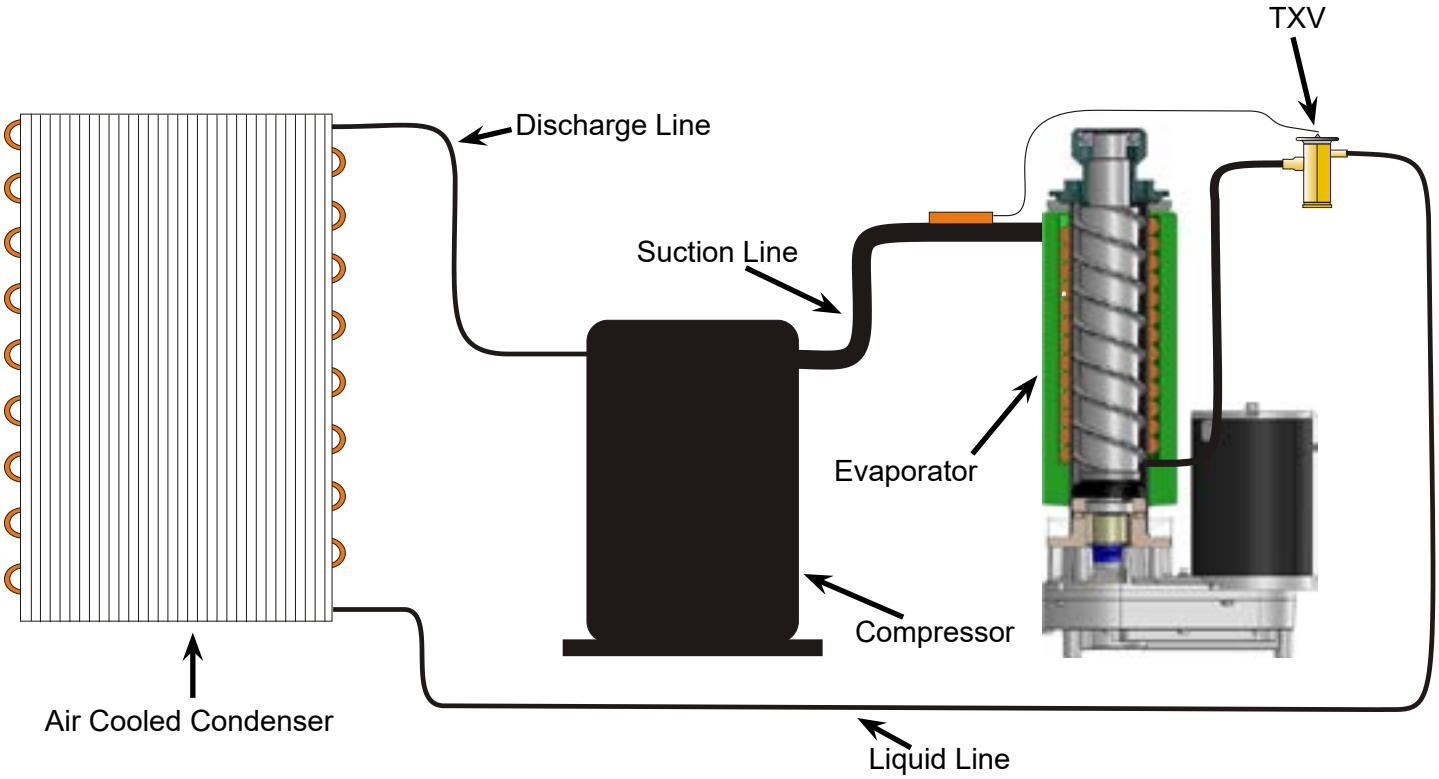

Refrigeration Schematic

Water Cooled Refrigeration

The compressor concentrates the heat from ice making into high pressure, hot discharge gas. The high pressure forces the gas to the water cooled condenser.

At the condenser, refrigerant gas and water flow through connected parallel tubes, but in opposite directions. Heat moves from the hotter discharge gas to the cooler water, and the refrigerant condenses into a liquid. The water flows out of the condenser warmed up to about 110°F. Water flow is controlled by a water regulating valve on the inlet of the condenser's water circuit.

From the condenser the high pressure liquid refrigerant flows through the liquid line to the metering device - a thermostatic expansion valve.

At the expansion valve, liquid refrigerant passes from a high pressure zone to one of relatively low pressure, and in the low pressure zone it evaporates.

The low pressure zone where the refrigerant evaporates is the evaporator. The evaporator is a vertical metal tube surrounded by a coil of tubing, where the refrigerant flows through. When the refrigerant evaporates in the coil, it absorbs heat from the metal parts of the evaporator and the water inside it. As the auger inside the evaporator turns, ice is continuously forced out of the evaporator and make up water flows in.

From the evaporator, the refrigerant, carrying the heat from ice making, flows back to the compressor through the suction line, and the cycle continues.

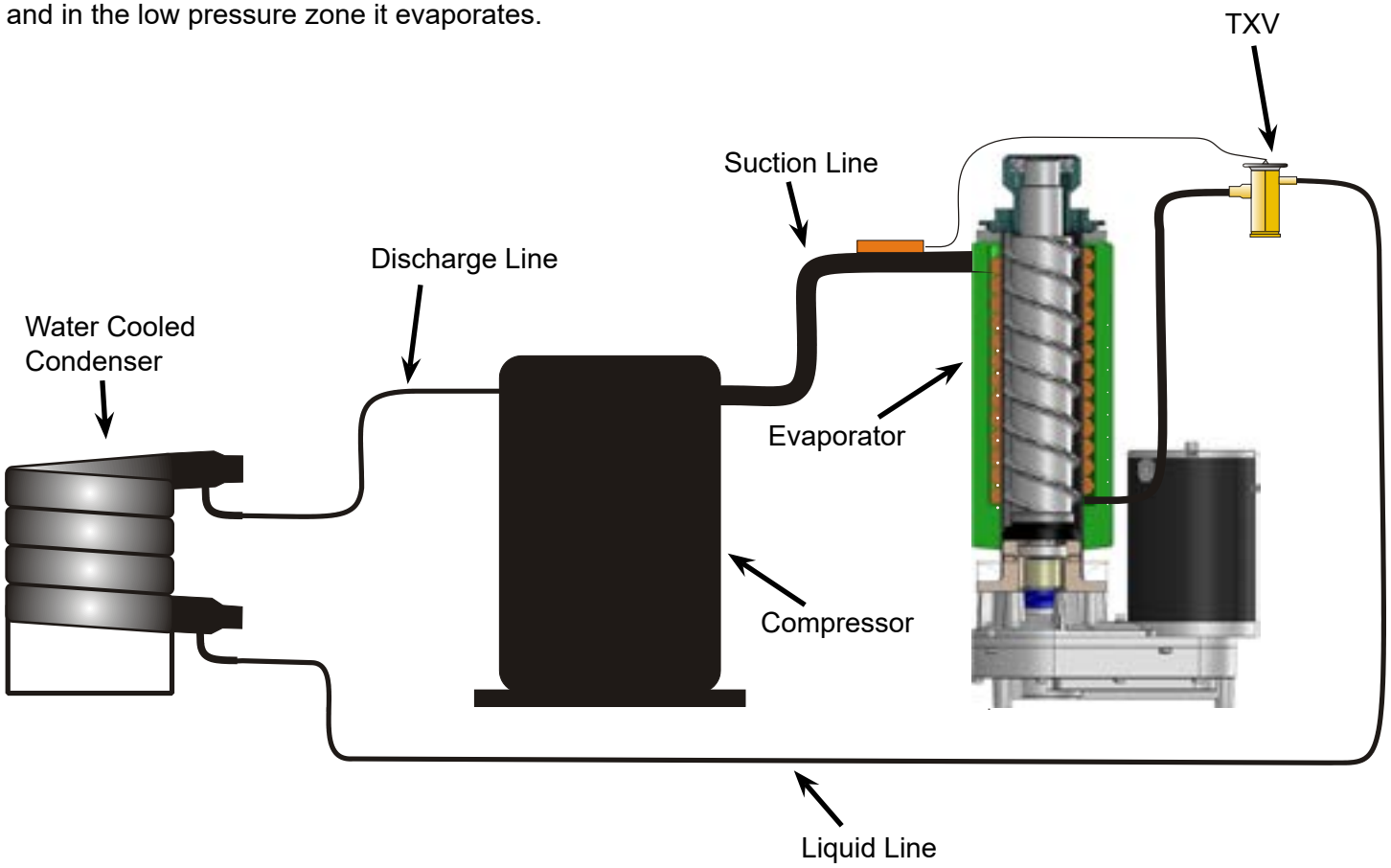

Refrigeration Schematic

Remote Air Cooled Refrigeration

The compressor concentrates the heat from ice making into high pressure, hot discharge gas. The high pressure forces the gas to the remote condenser. At the remote condenser, the discharge gas will either enter the coils or bypass them through the headmaster. The head master maintains a minimum discharge pressure to keep flash gas out of the liquid line.

From the condenser, refrigerant flows to the receiver. It can be either liquid or gas, depending upon the modulation of the head master. From the receiver, liquid refrigerant flows to the thermostatic expansion valve. At the expansion valve, liquid refrigerant passes from a high pressure zone to one of relatively low pressure, and in the low pressure zone it evaporates, absorbing heat.

From the evaporator, the refrigerant, carrying the heat from ice making, flows back to the compressor through the suction line, and the cycle continues.

When enough ice has been made, the control system closes the liquid line solenoid valve and the machine pumps down, forcing refrigerant out of the low side until the pump down pressure switch stops the compressor.

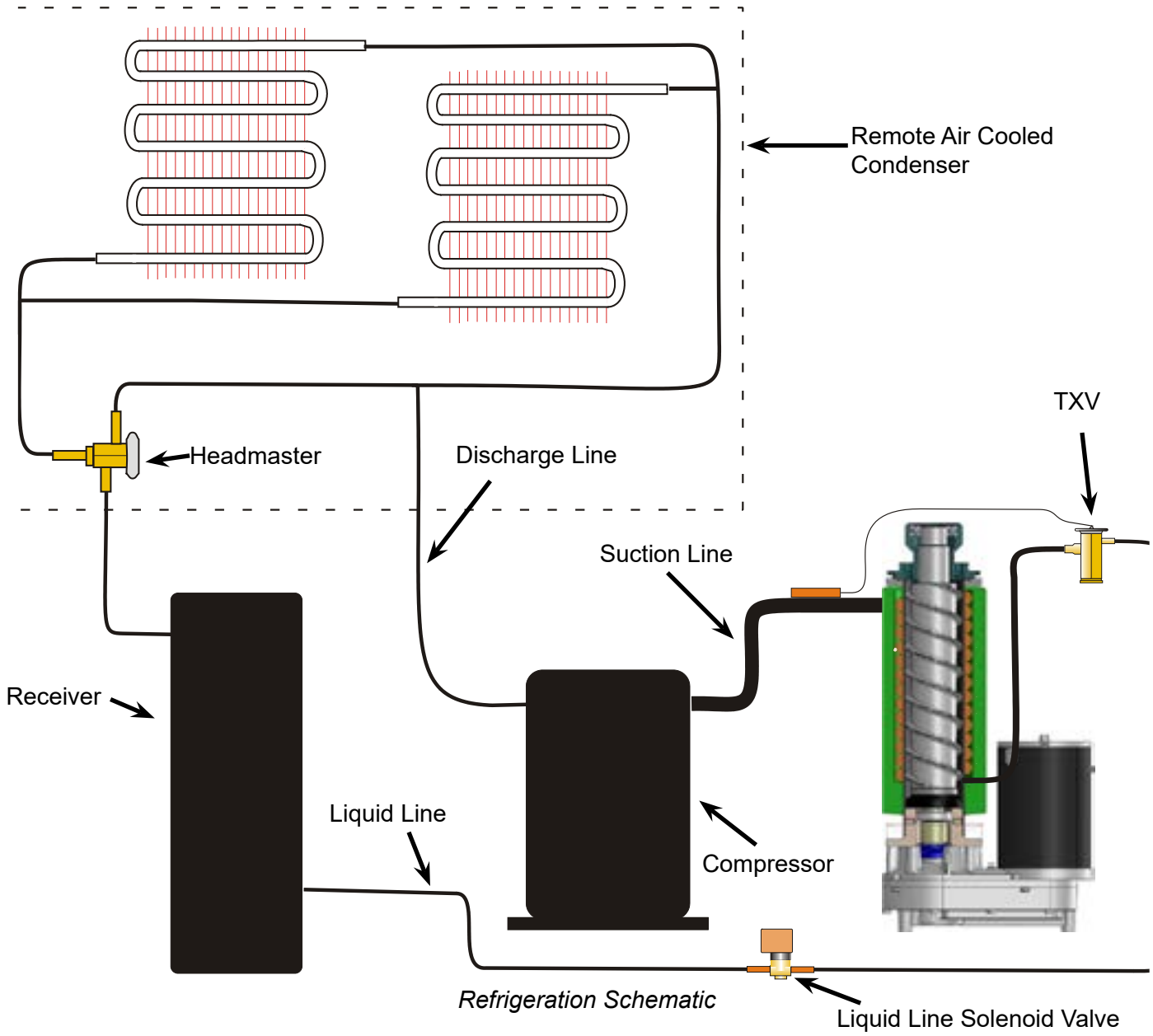

Refrigeration Schematic

How Ice Is Made

Refrigeration effect is applied to the water between the auger and the evaporator. When that water's temperature drops to its freezing point, ice crystals form throughout it. A continually rotating auger moves the ice up the evaporator tube. At this point the ice is a soft ribbon that fills the space between the auger and evaporator.

At the top of the evaporator tube, ice emerges from the water and is forced or extruded through relatively small openings. This has the effect of squeezing out excess water and compressing the ice together into a useable form.

Ice flowing from the openings is forced to one side, breaking it into smaller lengths. An ice sweep moves them to the chute.

Flaked ice machines have 6 oblong and curved slots that ice flows from, and they produce a softer, wetter ice form.

Soft nugget ice machines have 16 round holes and hard nugget ice machines have 8 round holes that form the nugget, which is more heavily compressed and contains less water than freshly made flaked ice.

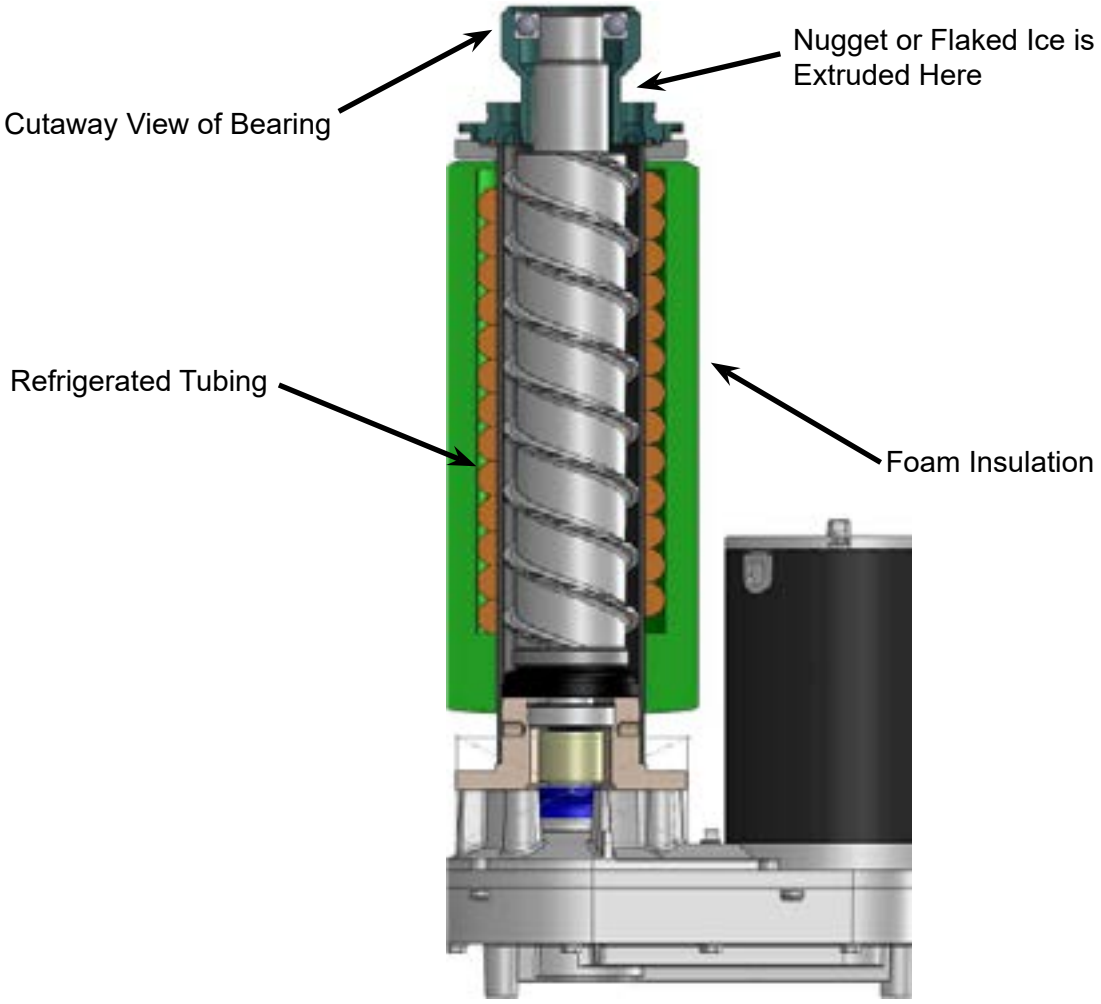

Click here to navigate to performance data

Pressure Switches

	Cut IN (PSIG)	Cut OUT (PSIG)
High pressure switch, AC, WC, RC	250	350
Low pressure switch, AC or WC	30	15

Compressor Amp Draw

Model	Voltage	Brand	Amps
NH0422, NS0422, FS0522	115	Embraco	6.4
NH0622, NS0622, FS0822	115	Embraco	8.7
NH0922, NS0922, FS1222	115	Embraco	13
NH0922, NS0922, FS1222	230 single phase	Embraco	6.7
NH1322, NS1322, FS1522	230 single phase	Embraco	10

Auger Drive Motor Amps

Model	Ice Machine Voltage	Auger Motor Amps	Control Cut Out Amps
NH0422, NS0422, FS0522	115	1.9 - 2.3	3
NH0622, NS0622, FS0822	115	1.9 - 2.3	3
NH0922, NS0922, FS1222	115	1.9 - 2.3	3
NH0922, NS0922, FS1222	230 single phase	0.9 - 1.2	2
NH1322, NS1322, FS1522	230 single phase	0.9 - 1.1	2

Heat Load, Charge and Condenser GPM

Heat Load - Average heat load for air conditioning unit sizing

Model	BTUH
NH0422, NS0422, FS0522	5075
NH0622, NS0622, FS0822	8202
NH0922, NS0922, FS1222	10593
NH1322, NS1322, FS1522	16538

Water Cooled Water Use - Condenser Only

Model	GPM @ Supply Water Temp (45°F)
NH0422, NS0422, FS0522	0.17
NH0622, NS0622, FS0822	0.21
NH0922, NS0922, FS1222	0.37
NH1322, NS1322, FS1522	0.34

Refrigerant Charge

Model	R-290 (oz)
NH0422AX, NS0422AX, FS0522AX	6
NH0422WX, NS0422WX, FS0522WX	4.5
NH0622AX, NS0622AX, FS0822AX	6.5
NH0622WX, NS0622WX, FS0822WX	5.25
NH0922AX, NS0922AX, FS1222AX	7
NH0922WX, NS0922WX, FS1222WX	6
NH0922AX, NS0922AX, FS1222AX (-32)	7
NH0922WX, NS0922WX, FS1222WX (-32)	6
NH1322AX, NS1322AX, FS1522AX	12
NH1322WX, NS1322WX, FS1522WX	10

Refrigeration System Pressures

Refrigeration system pressures of continuous flow ice machines do not vary a great deal while in operation. They will vary by model, condenser type and ambient temperature. Typical superheat range for all models is between 10°F and 16°F.

	70/50		90/70	
Model	**Suction (PSIG)**	**Discharge (PSIG)**	**Suction (PSIG)**	**Discharge (PSIG)**
NH0422AX, NS0422AX	24-26	139-149	26-28	184-194
NH0422WX, NS0422WX	22-24	168-178	25-27	176-186
FS0522AX	23-25	138-148	25-27	183-193
FS0522WX	21-23	167-177	25-27	175-185
NH0622AX, NS0622AX	19-21	155-165	21-23	203-213
NH0622WX, NS0622WX	19-21	170-180	20-22	176-186
FS0822AX	18-20	155-165	20-22	204-214
FS0822WX	18-20	172-182	19-21	178-188
NH0922AX, NS0922AX	21-23	163-173	24-26	215-225
NH0922WX, NS0922WX	22-24	168-178	23-25	176-186
FS1222AX	20-22	163-173	23-25	214-224
FS1222WX	21-23	167-177	22-24	171-181
NH1322AX, NS1322AX	16-18	154-164	19-21	204-214
NH1322WX, NS1322WX	12-14	170-180	12-14	175-185
FS1522AX	15-17	150-160	19-21	204-214

Maintenance

This ice machine needs five types of maintenance:

- Air cooled and remote models need their air filters or condenser coils cleaned regularly.
- All models need scale removed from the water system.
- All models require regular sanitization.
- All models require sensor cleaning.
- All models require a top bearing check.

Maintenance Frequency:

Air filters: At least twice a year, but in dusty or greasy air, monthly.

Scale removal. At least twice a year, in some water conditions it might be every 3 months. The yellow De-Scale & Sanitize light will switch on after a set period of time as a reminder. The default time period is 6 months of power up time.

Sanitizing: Every time the scale is removed or as often as needed to maintain a sanitary unit.

Sensor Cleaning: Every time the scale is removed.

Top bearing check: At least twice a year or every time the scale is removed. During the course of normal operation, some material buildup on top of the bearing is normal and should be wiped away during maintenance.

Maintenance: Air filters

1. Pull air filter(s) from panel.
2. Wash the dust and grease off the filter(s).
3. Return it(them) to their original position(s).

Do not operate the machine without the filter in place except during cleaning.

Maintenance: Air cooled condenser

If the machine has been operated without a filter the air cooled condenser fins will need to be cleaned.

They are located under the fan blades. The services of a refrigeration technician will be required to clean the condenser.

Maintenance: Remote air cooled condenser

The condenser fins will occasionally need to be cleaned of leaves, grease or other dirt. Check the coil every time the ice machine is cleaned.

Maintenance: Exterior Panels

The front and side panels are durable stainless steel. Fingerprints, dust and grease will require cleaning with a good quality stainless steel cleaner

Note: If using a sanitizer or a cleaner that contains chlorine on the panels, after use be sure to wash the panels with clean water to remove chlorine residue.

Maintenance: Water filters

If the machine has been connected to water filters, check the cartridges for the date they were replaced or for the pressure on the gauge. Change cartridges if they've been installed more than 6 months or if the pressure drops too much during ice making.

Maintenance: Scale Removal and Sanitation

Note: Following this procedure will reset the de-scale and sanitize light.

1. Remove front panel.
2. Push and release the Off button.
3. Remove ice from bin or dispenser.
4. Turn the water supply to the float valve OFF.
5. Drain the water and evaporator by disconnecting the leg of the hose connected to the water sensor and draining it into the bin. Return the hose to its original position.
6. Remove the water reservoir cover.
7. Mix a solution of 8 ounces of Scotsman Clear One Scale Remover and 3 quarts of 95-115 degree F. potable water.

Model:	Scotsman Clear One	Water
NS0422, NS0622, NS0922, NS1322, FS0522, FS0822, FS1222, FS1522	8 oz.	3 qts.
NH0422, NH0622, NH0922, NH1322	3 oz.	3 qts.

⚠WARNING

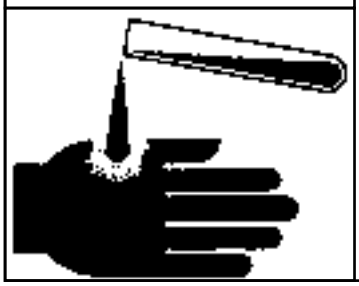

Ice machine scale remover contains acids. Acids can cause burns.
If concentrated cleaner comes in contact with skin, flush with water. if swallowed, do NOT induce vomiting.
Give large amounts of water or milk. Call Physician immediately. Keep out of the reach of children.

8. Pour the scale remover solution into the reservoir. Use a small cup for pouring.
9. Push and release the Clean button: the auger drive motor and light are on, C is displayed and the De-scale light blinks. After 20 minutes the compressor will start.
10. Operate the machine and pour the scale remover into the reservoir until it is all gone. Keep the reservoir full. When all the scale remover solution has been used, turn the water supply back on. After 20 minutes of ice making the compressor and auger motor will shut off.

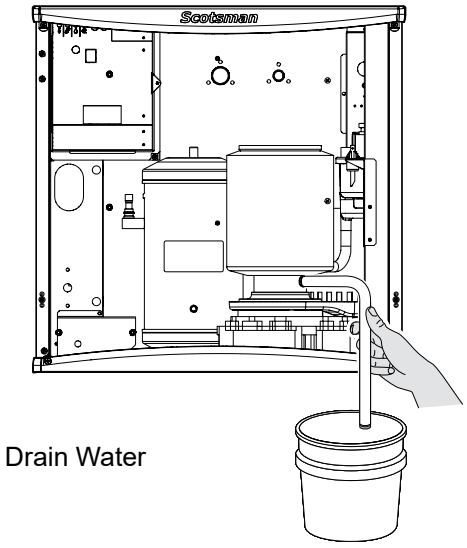

11. Turn the water supply to the ice machine OFF
12. Drain the water reservoir and evaporator by disconnecting the leg of the hose connected to the water sensor and draining it into the bin or a bucket. Return the hose to its original position. Discard or melt all ice made during the previous step.
13. Create a solution of sanitizer. Mix 4oz/118ml of NuCalgon IMS and 2.5gal/9.5L of (90°F/32°C to 110°F/43°C) potable water to create a 200 ppm solution.
14. Pour the sanitizing solution into the reservoir.
15. Push and release the On button.
16. Switch the water supply to the ice machine on.
17. Operate the machine for 20 minutes.
18. Push and release the Off button.
19. Wash the reservoir cover in the remaining sanitizing solution.
20. Return the reservoir cover to its normal position.
21. Melt or discard all ice made during the sanitizing process.
22. Wash the inside of the ice storage bin with the sanitizing solution.
23. Push and release the On button.
24. Return the front panel to its original position and secure with the original screws

Maintenance: Sensors

Photo Eyes

The control that senses bin full and empty is a photo-electric eye, therefore it must be kept clean so it can “see”. At least twice a year, remove the ice level sensors from the base of the ice chute, and wipe the inside clean, as illustrated.

1. Remove front panel.
2. Pull photo eye holders forward to release them.
3. Wipe clean as needed. Do not scratch the photo-eye portion.
4. Return the eye holders to their normal positions and return the front panel to its original position.

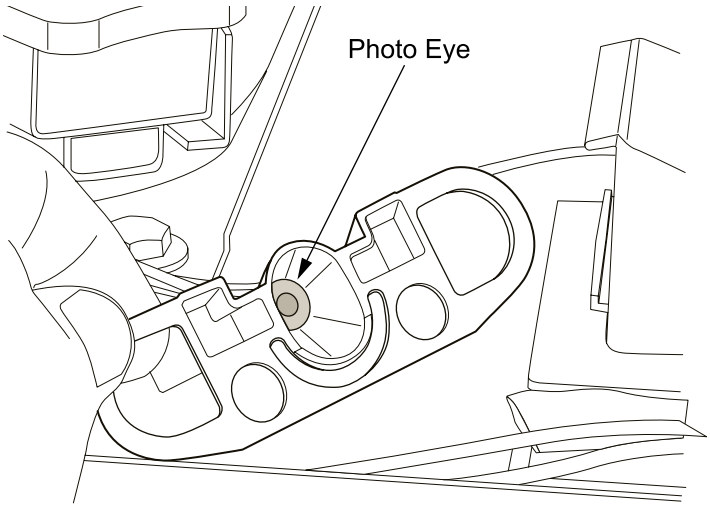

Note: Eye holders must be mounted properly. They snap into a centered position and are properly located when the wires are routed to the back and the left eye is the one with 2 wires at the connector.

Check Gear Reducer Lubricant

Although there is no normal access to the gear reducer lubricant, it can be checked without removal and complete disassembly.

Remove red vented plug from gearbox. Using a flathead screwdriver, check the oil level using the vent hole between the motor and the freezer. About 3/8” of oil should be on the tip of the screwdriver blade. Any more and there may be water in the gear case, any less and it may be low. The correct oil charge is 14 ounces. See picture to right.

Water Level

The ice machine senses water by probe located in the water reservoir. At least twice a year, the probes should be wiped clean of mineral build-up.

1. Shut off the water supply.
2. Remove front panel.
3. Remove the Phillips head screw and remove the water level sensor from the reservoir.
4. Wipe probes clean.

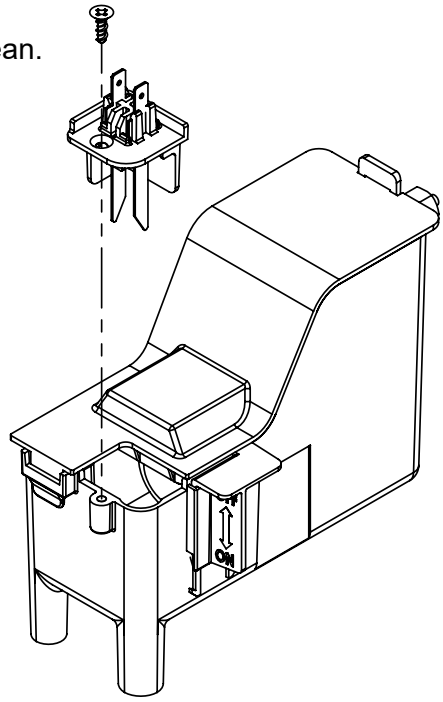

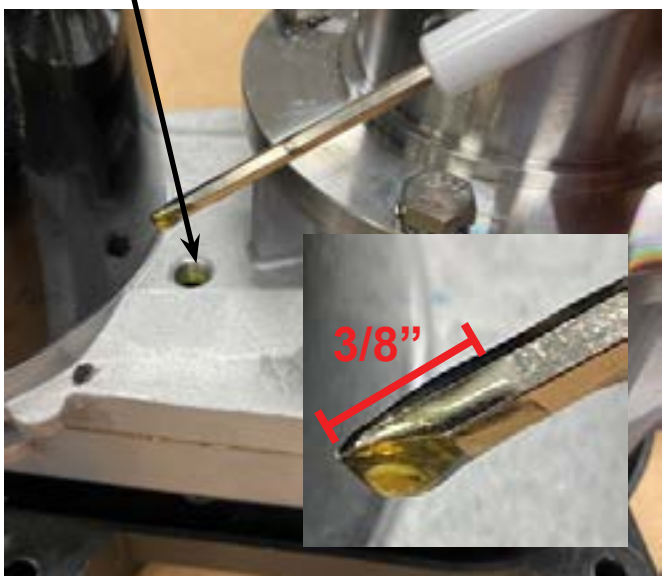

Service Diagnosis - Air Cooled

Symptom	Probable Cause	Possible Correction
No ice	No power	Check that ice machine has power. If power light is out, check transformer.
	Code 3: No water	Restore water, check filters, water level and sensor
	Status light is off	Push and release ON switch
	Code 1: No ice sensed	Check for ice flow down chute. if very slow or no ice being made, check for refrig. system failure
		Check auger motor for power, if no power, check controller component indicator light. If there is power to the motor, check motor windings
	Code 2: Auger motor draws too many amps, controller shut unit off.	Check for damage to gear reducer or auger bearings.
		Check for restriction between reservoir and evaporator
	Bin Eyes Blocked light is On	Ice is in the chute.
		No ice in the chute. Check position of sensors, check sensors for scale build up
	Code 4: Refrigeration system over or under pressure	Check for proper operation of the fan and motor; check for proper flow of water into evaporator; check for proper refrigerant charge
	Everything is in operation, but no refrigeration effect	Check compressor
		Check TXV superheat
		Check refrigerant charge
	Optional bin thermostat is open	Check thermostat or jumper wire on blue wires to #5 & #6
	Optional ultrasonic system senses false bin full	Check sensor for proper installation and operation
Low ice making capacity	Scale build up	Remove scale from evaporator and water system
	Air filter dirty	Clean air filter
	Condenser fins dirty	Clean condenser
	Restricted water to evaporator	Check for air bubble in hose, change reservoir if found
	Expansion valve superheat incorrect	Check superheat

Service Diagnosis - Water Cooled

Symptom	Probable Cause	Possible Correction
No ice	No power	If power light is out and there is power to the unit, check transformer.
	Code 3: No water	Restore water, check filters, water level and sensor
	Status light is off	Push and release ON switch
	Code 1: No ice sensed	Check for ice flow down chute. if very slow or no ice being made, check for refrigeration system failure
		Check auger motor for power, if no power, check controller component indicator light. If there is power to the motor, check motor windings
	Code 2: Auger motor draws too many amps, controller shut unit off.	Check for damage to gear reducer or auger bearings.
	Bin Eyes Blocked light is On	Ice is in the chute.
		No ice in the chute. Check position of sensors, check sensors for scale build up
	Code 4: Refrigeration system over or under pressure	Check water flow to condenser; check for proper flow of water into evaporator; check refrigerant charge
	Everything is in operation, but no refrigeration effect	Check water regulating valve
		Check TXV superheat
		Check refrigerant charge
	Optional bin thermostat is open	Check thermostat or jumper wire on blue wires to #5 & #6
	Optional ultrasonic system set too low	Adjust selector switch to a higher position
	Optional ultrasonic system senses false bin full	Check sensor for proper installation and operation
Low ice making capacity	Scale build up	Remove scale from evaporator and water system
	Restricted water to evaporator	Check for air bubble in hose, change reservoir if found
	High discharge pressure	Check water regulating valve
	Expansion valve superheat incorrect	Check superheat

Service Diagnosis - Remote Air Cooled

Symptom	Probable Cause	Possible Correction
No ice	No power	If ice machine has power and power light is out, check transformer.
	Code 3: No water	Restore water, check filters, water level and sensor
	Status light is off	Push and release ON switch
	Code 1: No ice sensed	Check for ice flow down chute. if very slow or no ice being made, check for refrigeration system failure
		Auger motor working, compressor off. Check liquid line valve and pump down switch
		Check auger motor for power, if no power, check controller component indicator light. If there is power to the motor, check motor windings or start switch
	Code 2: Auger motor draws too many amps, controller shuts unit off.	Check liquid line valve for leak through, causing auger to freeze in place
		Check for damage to gear reducer or auger bearings.
	Bin Eyes Blocked light is On	Ice is in the chute.
		No ice in the chute. Check position of sensors, check sensors for scale build up
	Code 4: High discharge pressure	Check remote condenser fan motor
	Everything is in operation, but no refrigeration effect	Check liquid line valve
		Check compressor
		Check TXV superheat
		Check refrigerant charge
	Optional ultrasonic system set too low	Adjust selector switch to a higher position
	Optional bin thermostat is open	Check thermostat or jumper wire on blue wires to #5 & #6
	Optional ultrasonic system senses false bin full	Check sensor for proper installation and operation

Service Diagnosis - Remote Air Cooled

Symptom	Probable Cause	Possible Correction
Low ice making capacity	Scale build up	Remove scale from evaporator and water system
	Restricted water to evaporator	Check for air bubble in hose to evaporator. If there is an air bubble AND the reservoir has a water sensor IN the bowl, replace the reservoir.
	High discharge pressure	Check remote condenser
		Check headmaster
	Expansion valve superheat incorrect	Check superheat
	Compressor cycles on and off frequently	Check liquid line valve for leak through
		May be normal, pump down switch will operate compressor as pump down switch closes and opens

Service Diagnosis - Refrigeration System Failure

Symptom	Probable Cause	Possible Correction
Compressor is not operating	Contactor not pulled in	Check voltage to coil of contactor, if correct, check coil of contactor
		Check if Low or High pressure cut outs open, Code 4 in code display
		Check if remote pump down switch not closed - if open, check low side pressure and liquid line valve
		Check for control board relay not supplying power to contactor
	Compressor overheated	Check for low refrigerant charge
		Check for high TXV superheat
		Check for high amp draw, possible start relay keeping start winding powered
	Compressor overload open	Check for overheating, or over amp draw
	Compressor will not start	Check start relay and start capacitor
		Check voltage at compressor
		Check voltage at contactor
		Check compressor windings
Compressor on, no refrigeration	Low charge	Check system charge
	Condenser dirty	Check condenser
	Remote - liquid line valve restricted	Check liquid line valve
	TXV not metering	Check superheat
	Auger not turning	Check gear reducer
	Remote headmaster in bypass mode	Check headmaster
	Inefficient compressor	Check compressor amp draw, if normal not likely inefficient
	Compressor internal relief open	Check suction and discharge pressure. Relief valve opens at a pressure differential between 450 and 550 and will not re-close until differential between suction and discharge is reduced to less than 450.

Service Diagnosis - Optional Ice Level Controls

Vari-Smart (KVS)

Symptom	Probable Cause	Possible Correction
No ice, bin full light is ON	Adjustment knob set too low	Rotate knob to first position, knob's arrow pointing to the left of the L in Lower (on the label)
	Obstruction beneath sensor	Check for and clear any item that might be below the sensor
	Sensor recessed	Check sensor, sensor must be flush in its holder and not recessed.
No ice, b in code display, no bin thermostat	Chute thermostat is open	Check chute thermostat
No ice, power light on, bin full light is OFF	Photo-eye in chute blocked	Check controller display code. If a b, check for blockage or scale build up on photo eyes in chute
		Check for photo eye failure
	Optional Smart-Board is controlling ice level	Check Smart-Board settings.
Ice level too high	Adjustment knob set to maximum fill	Check if knob's arrow points to label arrow.
	Sensor wire disconnected	Check for proper connection of sensor wire to VS control board

Bin Thermostat (KDIL-N)

Symptom	Probable Cause	Possible Correction
No ice, b in code display	Bin stat is open	Check for ice on bin thermostat capillary tube
		Check for cold ambient in bin
		Check continuity of bin thermostat when capillary tube is warm, replaced if does not close
Unit overfills, shuts off on photo-eyes	Bin stat is stuck closed	Check position of bin thermostat capillary tube.
		Check continuity of bin thermostat when ice is on the capillary tube, replaced if does not open

Options

Vari-Smart

Optional adjustable ice level control (KVS). When this option is present there is an adjustment post and an additional indicator light to the right of the four indicator lights mentioned earlier.

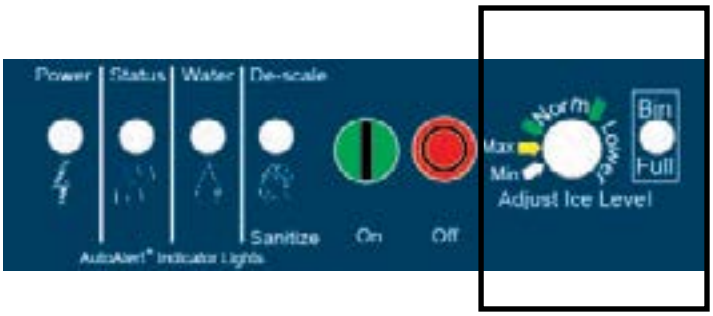

The ultrasonic ice level control allows the user to control the point that the ice machine will stop making ice before the bin or dispenser is full.

Reasons for this include:

- Seasonal changes in ice used
- Planning to sanitize the bin
- Faster turnover for fresher ice
- Certain dispenser applications where maximum ice level is not desired

Use of adjustable ice level control

There are several positions the ice level can be set to, including Off or Max (knob and label indicators lined up), where it fills the bin until the standard bin control shuts the machine off. See the kit's instructions for complete details.

Rotate the adjustment post to the desired ice level.

The machine will fill up to that level and when it shuts off the indicator light next to the adjustment post will be On.

Note: The maximum fill position is when the arrow on the knob points to the arrow on the label.

Dispenser applications - Nugget ice only:

Set the adjustment knob arrow to the Norm area between the green arrows. Select either the first or second positions as a starting point and adjust as needed.

Bin Stat

Another bin control method available on these machines is a bin thermostat (KDIL-N).

Type: Opens on temperature fall.

Connects: To blue wires to controller, in place of the jumper connecting the blue wires between terminals 5 and 6.

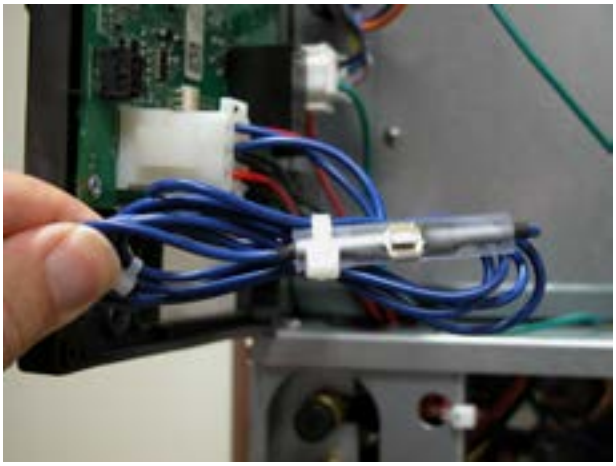

Use: In certain ice dispenser kits or whenever a permanently lowered ice level is desired and a KVS is not suitable.

Mounts: To the control box support post.

Result when open: Machine shuts down, b in code display.

Results when closed: Machine makes ice until either the circuit opens or the photo-eyes are blocked by ice.

Circuit voltage type: Low

Repair Procedures: Bearing And Extruder

Extruder:

1. Remove panels and disconnect electrical power.
2. Turn off the water to the machine, and unclip the evaporator drain hose, pull it down and drain the evaporator into the bin or a container.
3. Push back bail clamp and remove ice chute cover.
4. Unscrew and remove ice sweep.
5. Remove ice chute body and insulation collar.
6. The extruder/bearing assembly may now be removed:

- a. Unscrew 4 allen (1/4”) head screws holding extruder to evaporator and remove extruder

Note: The extruder may be removed from the evaporator without disturbing the auger and should be avoded unless the water seal is being replaced..

7. Reverse to reassemble:

- Inspect and replace parts as needed, including ice chute o-ring
- Torque all 4 allen head cap screws to 12.5 ft-lbs.

6. Service the bearing. Check for rust, rough spots, excessive play, or damage to bearing seals..

Auger:

1. Go thru the process of removing the extruder.
2. The auger may now be easily removed by hand

Note: If the auger is stuck, a slide hammer can be used. Thread the slide hammer into the threaded hole on top of the auger where the sweep goes. The size of that hole is 1/2”-13

Top Bearing:

1. Go through steps 1-4 of removing the extruder
2. Inspect the bearing for any rust, rough spots, excessive play, or damage to the bearing seals.
3. If bearing replacement is required, finish steps 5 and 6 to remove the extruder.
4. Remove the clip holding the bearing.
5. Tap out the old bearing. Bearing removal may require a press. Replacement of full extruder and bearing assembly is available and would not require a press.
6. Use the old bearing as something to press on and drive the new bearing into the extruder.
7. Reinstall the clip.

Bottom Bearing:

1. Go thru the process of removing the auger.
2. Remove the 4 allen (1/4”) head screws at the bottom of the evaporator.
3. Remove the bolts holding the bearing retainer to the gear reducer.
4. Separate the gear reducer, evaporator and bearing retainer.
5. Remove the clip.
6. Tap out the old bearing. May require a press.
7. Use the old bearing as something to press the new bearing on and drive the new bearing into the extruder.
8. Reverse to reassemble:

- Torque all 4 allen head screws to 12.5 ft-lbs.

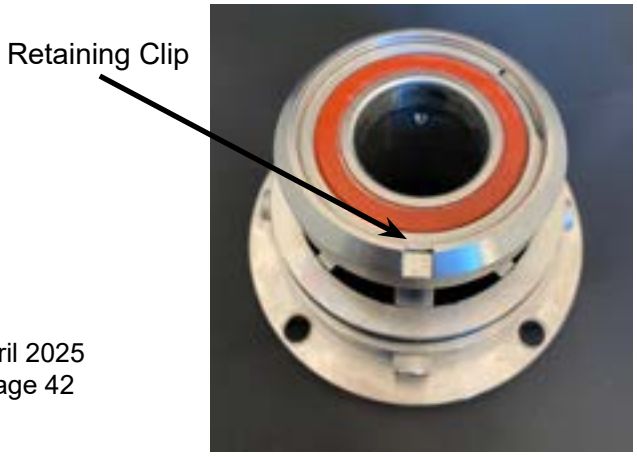

Auger and Evaporator Inspection

The auger must be carefully inspected for wear and scale. The wear areas are the top bearing surface, drive junction and the edges of the flights. The edges of the auger have horizontal serrations and there are highly machined areas in between. If the auger has contacted the evaporator wall, it will have very rough flight edges and should be replaced.

Scale forms on the auger during normal ice making. If scale is still on the auger after cleaning in the ice machine, the scale can be removed using ice machine cleaner and a nylon scrub pad.

Inspect the auger, the critical areas of the auger are:

1. The auger body. It should be clean and shining. Sometimes an auger will appear clean when wet, but after it is dry it will appear stained. Scrub the auger with ice machine cleaner and hot water.

Caution: Ice machine cleaner is an acid. Handle it with extreme care, keep out of the reach of children.

2. The water seal area. Because the auger has been removed, the water seal will have to be replaced. Remove the water seal top half from the auger, and remove any sealant or debris from the shoulder of the auger where the water seal was.

Inspect the evaporator's interior. The interior is stainless steel that should be bright and shiny when dry. If it isn't the scale on the surface must be removed. To remove scale:

1. Remove the water seal; it will have to be replaced.

2. Use a nylon brush and scrub the interior of the evaporator vertically to remove any scale.

3. Clean up any debris from the top of the gear reducer.

Example of a clean auger

Example of Scale Build Up on Evaporator Wall

Water Seal

1. Go through all steps to remove the auger.
2. Remove the 4 allen head screws at the bottom of the evaporator.
3. Lift the evaporator up and off the bottom bearing retainer.
4. Push the water seal up on one side until it twists, grab it and pull it out.
5. Remove the rotating half from the bottom of the auger.
6. Clean the auger shoulder and add a very thin bead of food grade sealant to the bottom of the auger. (732 RTV or Scotsman part number 19-0529-01)

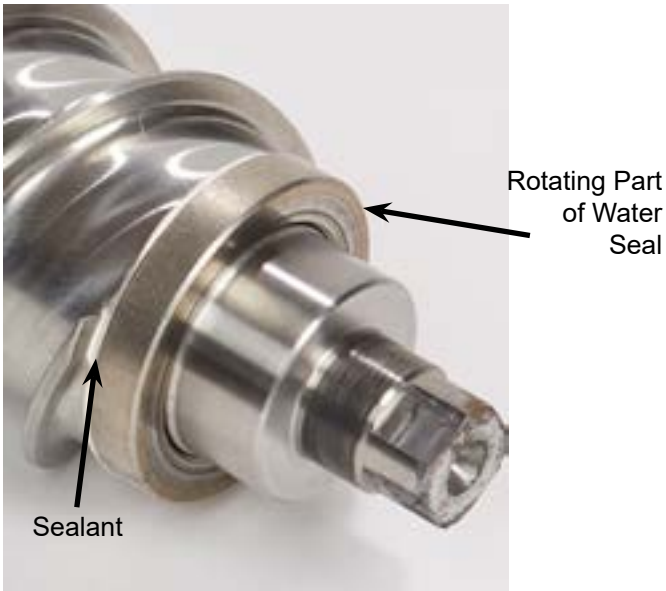

7. Carefully push the new rotating half of the water seal up against the sealant as far as possible. It should seat tightly and straightly against the auger shoulder. Do not put fingerprints on the sealing surface.
8. Wet the outside edge of the stationary half of the water seal and insert it into the bottom of the evaporator.
9. Slip the evaporator onto the bottom bearing retainer, the bearing retainer will push the water seal up into the correct position.

Note: The bottom bearing should have been replaced at this time. (see page 44)

10. Secure the evaporator to the bearing retainer with the original socket head screws. Be sure they are tight.

Repair Procedures: The Gear Reducer

Note: The high speed non-metallic fiber gear is the only internal part that is a service part and can be replaced individually. If any other parts of the gear reducer are damaged or it is discovered that water has infiltrated the gear reducer, the entire assembly will need to be replaced.

⚠WARNING

Electrical Shock Hazard

Disconnect electrical power before beginning

1. Remove the electrical wires from the gear drive motor.

2. Unscrew the 4 1/2” hex head cap screws holding the evaporator adapter to the gear reducer.

3. Remove the gear reducer from the ice machine. It is recommended to support the evaporator assembly to ensure no damage to refrigerant lines.

To Inspect the gear reducer:

1. Remove the cap screws holding the gear reducer case halves together and pry the two cases apart.

2, To lift off the cover, lift up until you can feel internal contact, then pull the cover towards the output gear end, and then lift the cover (with drive motor attached) up and away from the gear reducer case.

3. Inspect the oil, gears, and bearings. If the oil level and condition is acceptable, quickly check the gears and bearings. They are likely to be fine if the oil is.

If there is evidence of water in the oil (rusty bearings and gears; the oil having a creamy white appearance; oil level too high) carefully inspect the bearings and gears. If in doubt about the condition of a part, replace it. The oil quantity is 14 fluid ounces, do not overfill.

4. After inspecting gear reducer and replacing high speed non-metallic fiber gear if required, reassemble the gear case and cover.

5. After the gear case is together, replace all cap screws.

6. Check oil level. Remove red vented plug from gearbox. Using a flathead screwdriver, check the oil level using the vent hole between the motor and the freezer. About 3/8” of oil should be on the tip of the screwdriver blade. Any more and there may be water in the gear case, any less and it may be low. The correct oil charge is 14 ounces.

7. Bench test the gear reducer, check for oil leaks, noise, and amp draw.

Repair Procedures: Replace the Evaporator

(Assuming all the steps for removal of the thrust bearing, extruder, auger, and water seal have been performed.)

1. Recover the refrigerant from the ice maker.

2. Unsweat the refrigerant connections:

a) At the thermostatic expansion valve outlet.

Heat sink the TXV body when unsweating or resweating the adjacent tubing.

b) At the suction line at the joint about 3" from the evaporator.

3. Remove the evaporator.

4. Unsweat the drier from the liquid line.

5. After installing a new water seal in the new evaporator (see “To Replace the Water Seal”) sweat in the new evaporator at the old tubing connections.

6. Install an new drier in the liquid line.

7. Evacuate the system until dehydrated, then weigh in the nameplate charge. Check for leaks.

8. Install auger, extruder, extruder bearing assembly, and ice discharge chute in reverse order of disassembly.

To Reassemble the Evaporator and Auger

1. After the gear reducer has been inspected, fasten the evaporator to the gear reducer. Torque the bolts to 110 inch pounds.

2. Lower the auger into the evaporator barrel, slightly turning it to match up with the drive end. Do Not Drop Into the Evaporator.

3. Complete the reassembly by reversing the disassembly for the extruder & bearing assembly.

Repair Procedures: Thermostatic Expansion Valve

1. Remove front panel.
2. If the machine was in operation, push and release the off button to shut it down.
3. Disconnect electrical power.
4. Recover refrigerant.
5. Remove insulation covering expansion valve and bulb.
6. Remove strap securing bulb to suction line.
7. Unsweat the expansion valve from the liquid line. Remove it.
8. Unsweat the drier from the liquid line. Remove it.
9. Connect nitrogen to discharge access valve.
10. Immediately place new valve in ice machine.
11. Open nitrogen bottle and braze expansion valve inlet and outlet joints together. Braze new drier into system.
12. Shut off nitrogen, shut access valves.
13. Evacuate to at least 300 microns.
14. Weigh in the nameplate charge. Check for leaks.
15. Attach bulb to suction line. Position at 4 or 8 o'clock on the tube. Secure tightly but do not crush the bulb with the strap.
16. Attach valve and bulb insulation.
17. Reconnect electrical power.
18. Return all panels to their original positions.

Decommissioning

Only qualified technicians familiar with R290 refrigerant should decommission a machine, as special tools and containers are required for the removal, transportation, and disposal of this highly flammable substance.

Work shall be undertaken under a controlled procedure so as to minimise the risk of a flammable gas or vapour being present while the work is being performed.

- Before attempting the procedure:
  - All maintenance staff and others working in the local area shall be instructed on the nature of work being carried out. Work in confined spaces shall be avoided.
  - The area shall be checked with an appropriate refrigerant detector prior to and during work, to ensure the technician is aware of potentially toxic or flammable atmospheres. Ensure that the leak detection equipment being used is suitable for use with all applicable refrigerants, i.e., nonsparking, adequately sealed, or intrinsically safe.
  - If any hot work is to be conducted on the refrigerating equipment or any associated parts, appropriate fire extinguishing equipment shall be available on hand. A dry chemical or CO2 fire extinguisher should be adjacent to the charging area.
  - No person carrying out work in relation to a REFRIGERATING SYSTEM which involves exposing any pipe work shall use any sources of ignition in such a manner that it may lead to the risk of fire or explosion. All possible ignition sources, including cigarette smoking, should be kept sufficiently far away from the site of installation, repairing, removing and disposal, during which refrigerant can possibly be released to the surrounding space. Prior to work taking place, the area around the equipment shall be surveyed to make sure that there are no flammable hazards or ignition risks. “No Smoking” signs shall be displayed.
  - Ensure that all protective gear is present and used throughout the procedure.
  - Make sure recovery equipment and containers are available and ready for use. All containers used for recovery must be rated for R290 refrigerant and must be labeled as such.
  - Weigh any refrigerant prior to reclaiming.
- Maintain safety through standard operating procedures as outlined on page 20 of this document. Be sure to follow local, state, and federal guidelines for proper disposal.
- Do not fill containers more than 80% and do not exceed the pressure limits of the container. Make sure the machine to be decommissioned is in satisfactory working order and that the electrical components of the machine are properly sealed to prevent ignition.
- Recovered refrigerant should not be charged into another refrigerating system or mixed in another container.
- Make sure to safely transport the refrigerant in line with standard operating procedures.
- All recovered refrigerant must be returned to refrigerant supplier for proper disposal.
- If compressor or compressor oils are removed ensure it has been removed to an acceptable level so the flammable refrigerant does not remain in the lubricant.
- In addition to conventional charging procedures, the following requirements shall be followed:
  - Ensure that contamination of different refrigerants does not occur when using charging equipment. Hoses or lines shall be as short as possible to minimise the amount of refrigerant contained in them.
  - Cylinders shall be kept in an appropriate position according to the Instructions.

Decommissioning, continued

- Ensure that the REFRIGERATING SYSTEM is earthed prior to charging the system with refrigerant.
- Label the system when charging is complete (if not already).
- Extreme care shall be taken not to overfill the REFRIGERATING SYSTEM.

- Prior to recharging the system, it shall be pressure-tested with the appropriate purging gas. The system shall be leak-tested on completion of charging but prior to commissioning. A follow up leak test shall be carried out prior to leaving the site
- Before carrying out this decommissioning procedure, it is essential that the technician is completely familiar with the equipment and all its detail. It is recommended good practice that all refrigerants are recovered safely. Prior to the task being carried out, an oil and refrigerant sample shall be taken in case analysis is required prior to re-use of recovered refrigerant. It is essential that electrical power is available before the task is commenced.
  - Become familiar with the equipment and its operation.
  - Isolate the system electrically.
  - Before attempting the procedure, ensure that:
    - mechanical handling equipment is available, if required, for handling refrigerant cylinders;
    - all personal protective equipment is available and being used correctly;
    - the recovery process is supervised at all times by a competent person;
    - recovery equipment and cylinders conform to the appropriate standards.
  - Pump down refrigerant system, if possible.
  - If a vacuum is not possible, make a manifold so that refrigerant can be removed from various parts of the system.
  - Make sure that cylinder is situated on the scales before recovery takes place.
  - Start the recovery machine and operate in accordance with instructions.
  - Do not overfill cylinders (no more than 80 % volume liquid charge).
  - Do not exceed the maximum working pressure of the cylinder, even temporarily.
  - When the cylinders have been filled correctly and the process completed, make sure that the cylinders and the equipment are removed from site promptly and all isolation valves on the equipment are closed off.
  - Recovered refrigerant shall not be charged into another REFRIGERATING SYSTEM unless it has been cleaned and checked.

- Equipment shall be labelled stating that it has been de-commissioned and emptied of refrigerant. The label shall be dated and signed. For appliances containing FLAMMABLE REFRIGERANTS, ensure that there are labels on the equipment stating the equipment contains FLAMMABLE REFRIGERANT.
- When removing refrigerant from a system, either for servicing or decommissioning, it is recommended good practice that all refrigerants are removed safely. When transferring refrigerant into cylinders, ensure that only appropriate refrigerant recovery cylinders are employed. Ensure that the correct number of cylinders for holding the total system charge is available. All cylinders to be used are designated for the recovered refrigerant and labelled for that refrigerant (i.e., special cylinders for the recovery of refrigerant). Cylinders shall be complete with pressure-relief valve and associated shut-off valves in good working order. Empty recovery cylinders are evacuated and, if possible, cooled before recovery occurs.

Decommissioning, continued

The recovery equipment shall be in good working order with a set of instructions concerning the equipment that is at hand and shall be suitable for the recovery of all appropriate refrigerants including, when applicable, FLAMMABLE REFRIGERANTS. In addition, a set of calibrated weighing scales shall be available and in good working order.

- Hoses shall be complete with leak-free disconnect couplings and in good condition. Before using the recovery machine, check that it is in satisfactory working order, has been properly maintained and that any associated electrical components are sealed to prevent ignition in the event of a refrigerant release. Consult manufacturer if in doubt. The recovered refrigerant shall be returned to the refrigerant supplier in the correct recovery cylinder, and the relevant waste transfer note arranged. Do not mix refrigerants in recovery units and especially not in cylinders. If compressors or compressor oils are to be removed, ensure that they have been evacuated to an acceptable level to make certain that FLAMMABLE REFRIGERANT does not remain within the lubricant. The evacuation process shall be carried out prior to returning the compressor to the suppliers. Only electric heating to the compressor body shall be employed to accelerate this process. When oil is drained from a system, it shall be carried out safely.

SCOTSMAN ICE SYSTEMS

101 Corporate Woods Parkway

Vernon Hills, IL 60061

800-726-8762

www.scotsman-ice.com