Ice-O-Matic®

SERVICE AND INSTALLATION MANUAL
THE ICE SERIES CUBERS
ICE0250 through ICE2100 SERIES*

***Includes Undercounter and 22 Inch Series**

Ice-O-Matic
11100 East 45th Ave
Denver, Colorado 80239
11-1000

Date 8/22/15

Ice-O-Matic has partnered with ENERGY STAR since 2004 to ensure our customers receive the most efficient ice machines for your investment dollar. Ice-O-Matic is committed to the continuous improvement in both energy efficiency and productivity thereby delivering the best value in energy efficient ice machines money can buy.

For a detailed list of ENERGY STAR qualified Ice-O-Matic ice machines, go to:

http://www.iceomatic.com/Products/Sales-Literature/#

Plant-a-Tree Program

As part of our commitment to the global environment, Ice-O-Matic is devoted to sustainability in every aspect of our business. To offset the carbon footprint of our factory in Denver, we not only recycle materials in our packaging and manufacturing but also recycle our industrial and office waste products.

More important, we partner with AMERICAN FORESTS and plant a tree for every ice machine we sell, thereby supporting reforestation of key regions throughout the world. Our goal is to plant 150,000 trees through our Global Sustainability program. Trees reduce topsoil erosion, prevent harmful land pollutants from getting into our waterways and replace air pollutants with fresh, clean oxygen.

Ice-O-Matic Warranty

Every Ice-O-Matic ice maker is backed by a warranty that provides both parts and labor coverage. To view the warranty details, register products, or check your warranty status visit the “Warranty and Water Filter Registration” page on www.iceomatic.com

This manual belongs to:_____

Always feel free to contact the Ice-O-Matic Service Department with any questions or comments.

Ice-O-Matic
11100 East 45th Avenue
Denver, Colorado 80239
Telephone: (303) 371-3737
Toll Free: (800) 423-3367
FAX: (303) 576-2944

After Hours Emergency Technical Support
(888) FIX-4-ICE (888 349-4423)

Additional Telephone Numbers

Contact: **(Area Code)** **Phone Number**

_____

_____

_____

_____

_____

Table of Contents

Table of Contents Page A1

General Information
How To Use This Manual Page A2
Model And Serial Number Format Page A3
Installation Guidelines Page A5
Electrical And Plumbing Requirements Page A6-A13
Remote Condenser Installation Page A14-A15
How The Machine Works Page A16
Undercounter Model Bin Removal Page A17-A18
Warranty Information Page A20

Scheduled Maintenance
Maintenance Procedure Page B1
Cleaning and Sanitizing Instructions Page B2-B3
Winterizing Procedure Page B4
Cabinet Care Page B5

Troubleshooting Trees
How to Use The Troubleshooting Trees Page C1
Troubleshooting Trees Table Of Contents Page C2
Troubleshooting Trees Page C3-C18

Water System
Water Distribution And Components Page D1-D5

Refrigeration System
Refrigeration Cycle And Components Page E1
Harvest Cycle Page E5
Remote System Page E5-E6
Pump Down System Page E7

Electrical System
Control Circuit Page F1
Compressor And Start Components Page F1-F2
Untimed Freeze Cycle Page F3
Timed Freeze Cycle Page F4
Harvest Cycle Page F5-F9
Pump Down System Page F9
Electrical Sequence ICE1400-2100 Version 3 Page F10
Wiring Diagrams Page G1

Cuber Performance Data Page H1
Specifications Page I1

How To Use This Manual

Ice-O-Matic provides this manual as an aid to the service technician in installation, operation, and maintenance of the **ICE Series** (electro-mechanical) cube ice machines. If used properly this manual can also assist the service technician to troubleshoot and diagnose most of the problems that may occur with the machine.

The first two sections of this manual provide general information and maintenance information. The remainder of the manual beginning with Section C provides troubleshooting and service information. Section C contains flow charts called troubleshooting trees. Page C-1 provides instructions on using the troubleshooting trees. Each troubleshooting tree is named to describe a particular problem with the operation of the machine.

When following the troubleshooting trees, the service technician will be led through questions and checks and end up with a probable solution. When using the troubleshooting trees, it is important that the service technician understand the operation and adjustments of the components being checked and the component suspected of malfunctioning. A detailed description of the operation and adjustments of the components as well as other service information is available in the pages that follow Section C.

Sections D, E, and F focus on a particular system in the ice machine: water distribution system, refrigeration system, and it is important that these sections be used together with the Troubleshooting Trees in Section C.

Most aspects of the ICE Series machines are covered in this manual, however, should you encounter any conditions not addressed herein, please contact the Ice-O-Matic Technical Service Department for assistance. You may also e-mail or write the Ice-O-Matic Technical Service Department:

Ice-O-Matic
11100 E. 45th Ave.
Denver, Co. 80239
Attn: Technical Service Department
E-Mail: Tech.service@iceomatic.com

Telephone Numbers
800-423-3367 All Department
888-349-4423 Technical Assistance Only
303-371-3737

Any Service communication must include:

- Model Number
- Serial number
- A detailed explanation of the problem

Note the warning symbol where it appears in this manual.
It is an alert for important safety information on a hazard that might cause serious injury.
Keep this manual for future reference.

The ICE Series Service Parts Manuals are available separately.

Ice-O-Matic products <u>are not</u> designed for outdoor installation.

Model and Serial Number Format

Model Numbers

ICE 040 0 H A

- A — Condenser Type: A=Air W=Water R=Remote T=Top Discharge Air Cooled
- H — Cube Size: H=Half (3/8x7/8x7/8) F=Full (7/8x7/8 x7/8) G=Grande (1¼x1⅛x7/8)
- 0 — Voltage: 0=115V 5=240/50/1 6=208-230/60/1 7=208-230/60/3
- 040 — Approximate 24 hour ice production: (x 10 @ 70°F/21°C Air and 50°F/10°C Water)
- ICE — Series: Slab ice cuber, Stainless Steel Cabinet

Serial Number Date Code (Prior to August 2004)

The first letter in the serial number indicates the month and decade of manufacture.
The first digit in the serial number indicates the year of manufacture.

Example: A0XX-XXXXX-Z is manufactured January 2000
A1XX-XXXXX-Z is manufactured January 2001

1990-1999	MONTH	2000-2004
M	JANUARY	A
N	FEBRUARY	B
P	MARCH	C
Q	APRIL	D
R	MAY	E
S	JUNE	F
T	JULY	G
U	AUGUST	H
V	SEPTEMBER	I
W	OCTOBER	J
Y	NOVEMBER	K
Z	DECEMBER	L

Note: The letter O and letter X are not used.

Reference new serial number format on next page.

Model and Serial Number Format

Sample Only

MODEL NUMBER
ICE0400HA2

SERIAL NUMBER
04071280010123

AC SUPPLY VOLTAGE ~ 115 HERTZ 60
TOTAL LOAD AMPS PHASE 1
MINIMUM CIRCUIT AMPACITY 14.4 WIRES 2
MAX FUSE SIZE OR HACR TYPE CIRCUIT BREAKER 15.0
HEATER WATTS

MOTORS		VOLTS	RLA/FLA	W/HP	LRA
1	COMPRESSOR	115	9.5		51.0
1	FAN	115	2.0	0.06HP	
	DRIVE				
1	HARVEST	115	.1	3W	
1	PUMP	115	.4	31W	

RATED POWER CONSUMPTION (KW) 0
REFRIGERANT R404A CHARGE/CIRCUIT 30 OZ 849 GRAMS
NUMBER OF REFRIGERANT CIRCUITS 1
DESIGN PRESSURES P.S.I. 252 – LO 500 – HI
BARS 17.7 – LO 35.1 – HI

C UL LISTED 361P US
NSF COMPONENT
ICE MAKER WITHOUT STORAGE MEANS

MILE HIGH EQUIPMENT CO.
DENVER, COLORADO 80239
MADE IN U.S.A.

RATED ENERGY EFFICIENCY
(KWH/100 LB) 6.5 (KJ/KG) 555.6
MINIMUM BIN ENERGY EFFICIENCY (%) NA
Verified in Accordance With Energy Standard CAN/CSA 742 – 98 and
ARI 810 – 91 by Underwriters Laboratories Inc.
Approved City of Los Angeles Mechanical Testing Laboratory M – 860074
Accepted for use City of New York Department of Buildings MEA 37 – 00 – E

MODEL NUMBER ICE0400HA2
SERIAL NUMBER 04071280010123
VOLTS/HERTZ/PHASE 115/60/1 MAX FUSE SIZE 15.0
REFRIGERANT R404A CHARGE/CIRCUIT 30 OZ 849 GRAMS
C UL LISTED 361P US
NSF COMPONENT
ICE MAKER WITHOUT STORAGE MEANS

This format is 14 characters long and begins with a date code followed by the Ice-O-Matic identifier, and then a sequential number. This is an entirely numerical serial number.

The new serial number will look like the example.

0407 1280 010123

010123 is the serial identifier.

1280 is the identifier. (Ice-O-Matic)

0407 is the date code, in YYMM format. (2004 July)

The date code will change monthly and yearly to reflect the date of manufacture.

← Large data plate will be placed on the back of the unit.

← Small data plate will be placed by the service valves.

Installation Guidelines

Note: Installation should be performed by an Ice-O-Matic trained Service Technician.
For proper operation of the Ice-O-Matic ice machine, the following installation guidelines must be followed. Failure to do so may result in loss of production capacity, premature part failures, and may void all warranties.

Ambient Operating Temperatures
Minimum Operating Temperature: 50°F (10°C)
Maximum Operating Temperature 100°F (38°C), 110°F (43°C) on 50 Hz. Models.
Note: Ice-O-Matic products are not designed for outdoor installation.

Incoming Water Supply (See Plumbing Diagram for line sizing Page A6-A13)
Minimum incoming water temperature: 40°F (4.5°C)
Maximum incoming water temperature: 100°F (38°C)
Minimum incoming water pressure: 20 psi (1.4 bar)
Maximum incoming water pressure: 60 psi (4.1 bar)
Note: If water pressure exceeds 60 psi (4.1 bar), a water pressure regulator must be installed.

Drains: All drain lines must be installed per local codes. Flexible tubing is not recommended. Route bin drain, purge drain and water condenser drain individually to a floor drain. The use of condensate pumps for draining water is not recommended by Ice-O-Matic. Ice-O-Matic assumes no responsibility for improperly installed equipment.

Water Filtration: A water filter system should be installed with the ice machine.

Clearance Requirements: Self contained air cooled ice machines must have a minimum of 6 inches (15cm) of clearance at the rear, top, and sides of the ice machine for proper air circulation.

Stacking: Ice-O-Matic does not endorse stacking ice machines.

Dispenser Application: A thermostatic bin control kit must be installed if the ICE Series ice machine is placed on a dispenser. A bin top may or may not be required. **(Exception is the CD400 Dispenser**)

Electrical Specifications: Refer to the serial plate at the rear of the ice machine or the charts starting on page H1.

Adjustments
Level the machine within 1/8 inch in all directions.
Check the bin control for proper adjustment, Page F9
Check the water in the water trough for proper level, Page D1
Check the ice bridge for proper thickness, Page F4
Check the cam switch adjustment. Page F8
Check the water regulating valve adjustment if water cooled, Page E2

Electrical and Plumbing Requirements: ICEU150, ICEU200, ICEU205 and ICEU206

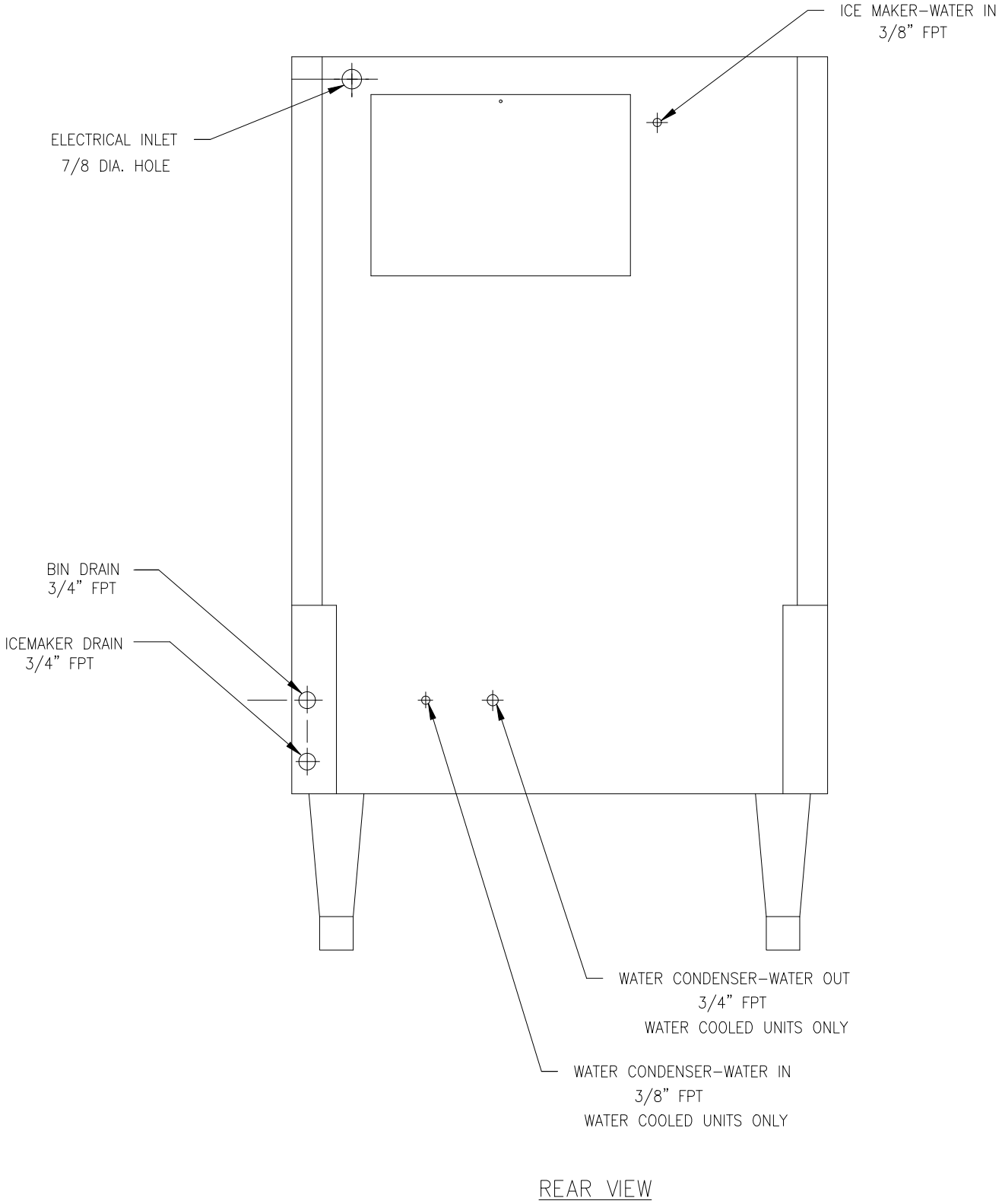

Electrical and Plumbing Requirements: ICEU150, 220, 225 and 226

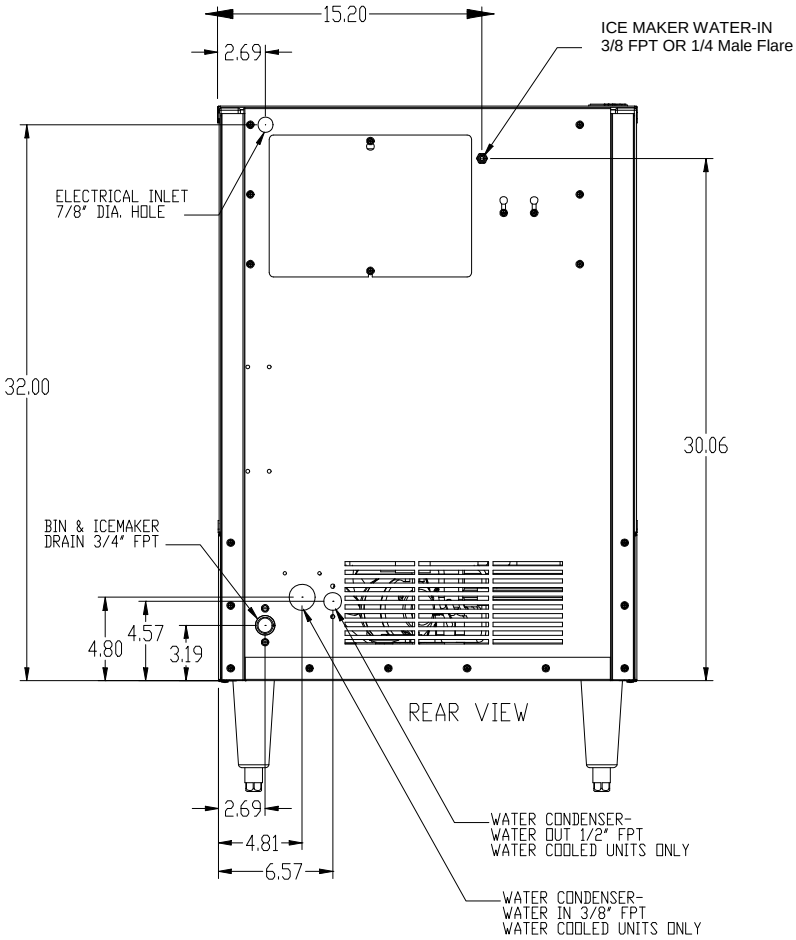

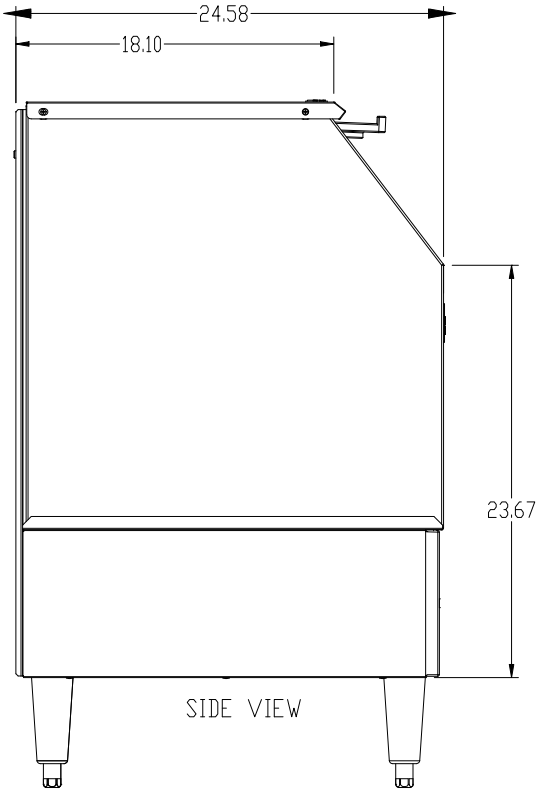

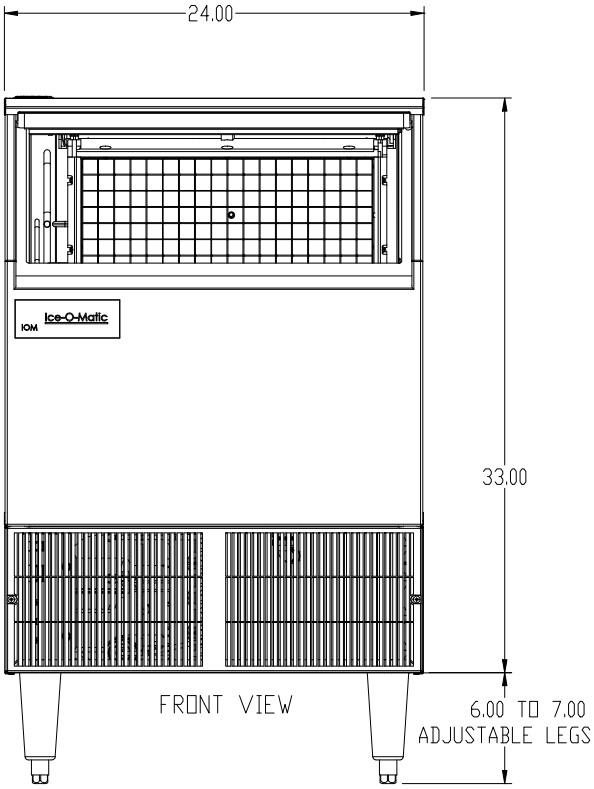

Note: The ICEU150, ICEU220, ICEU225 and ICEU226 do not have a splash curtain.

These models utilize a thermostatic bin control in place of a mechanical bin switch.

Electrical and Plumbing Requirements: ICEU300 and 305

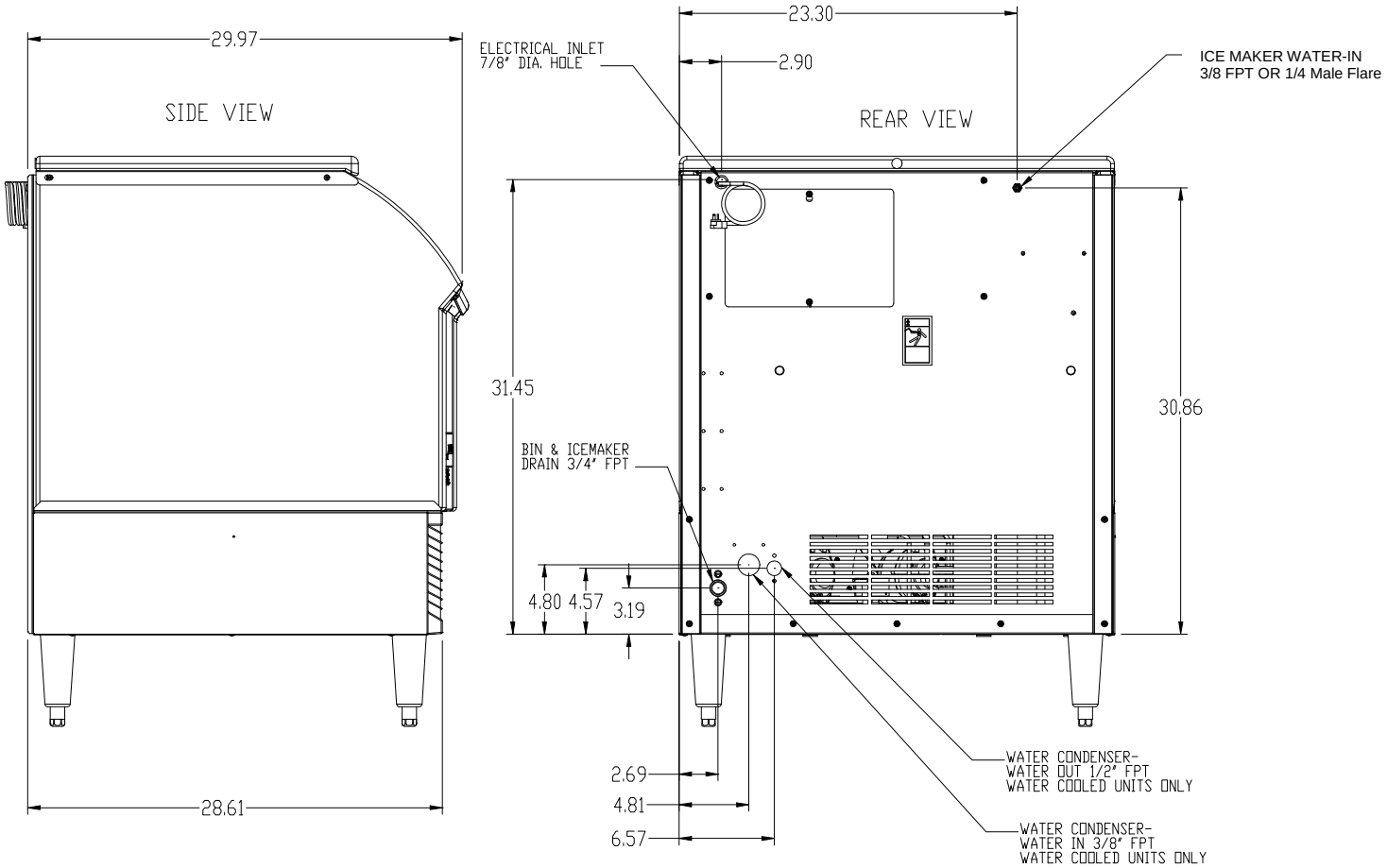

Note: The ICEU300 does not have a splash curtain.

This model utilize a thermostatic bin control in place of a mechanical bin switch.

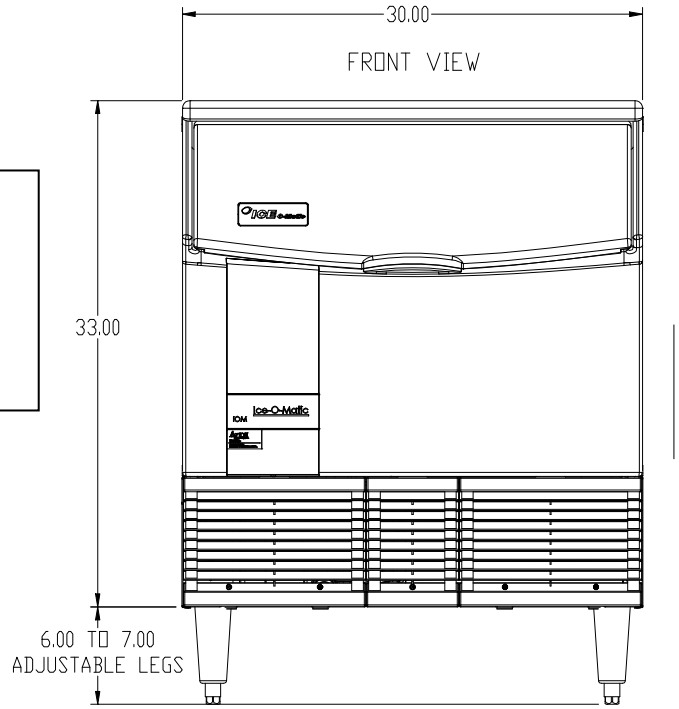

Electrical and Plumbing Requirements: ICE0250, ICE0400, ICE0500, ICE0606, ICE0806 and ICE1006 (30 Inch Wide Cubers) ICE0855, ICE0856 and ICE1006

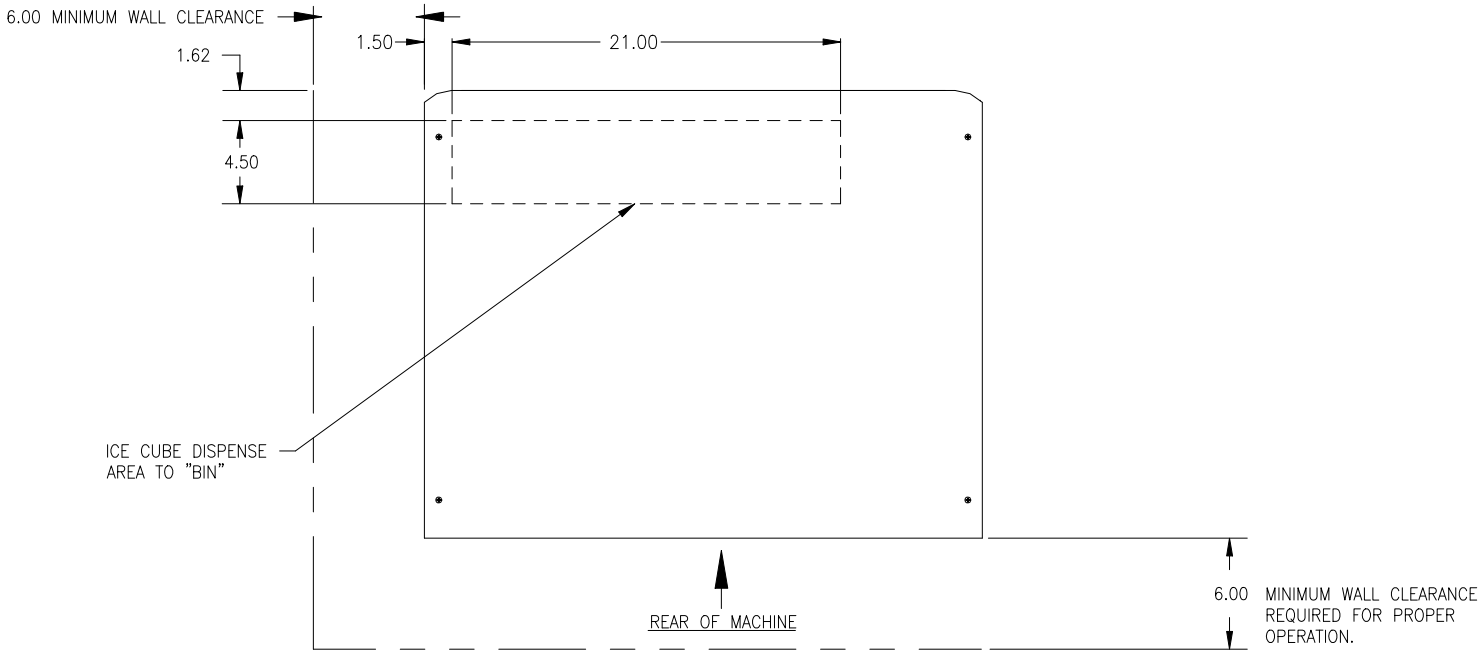

TOP VIEW

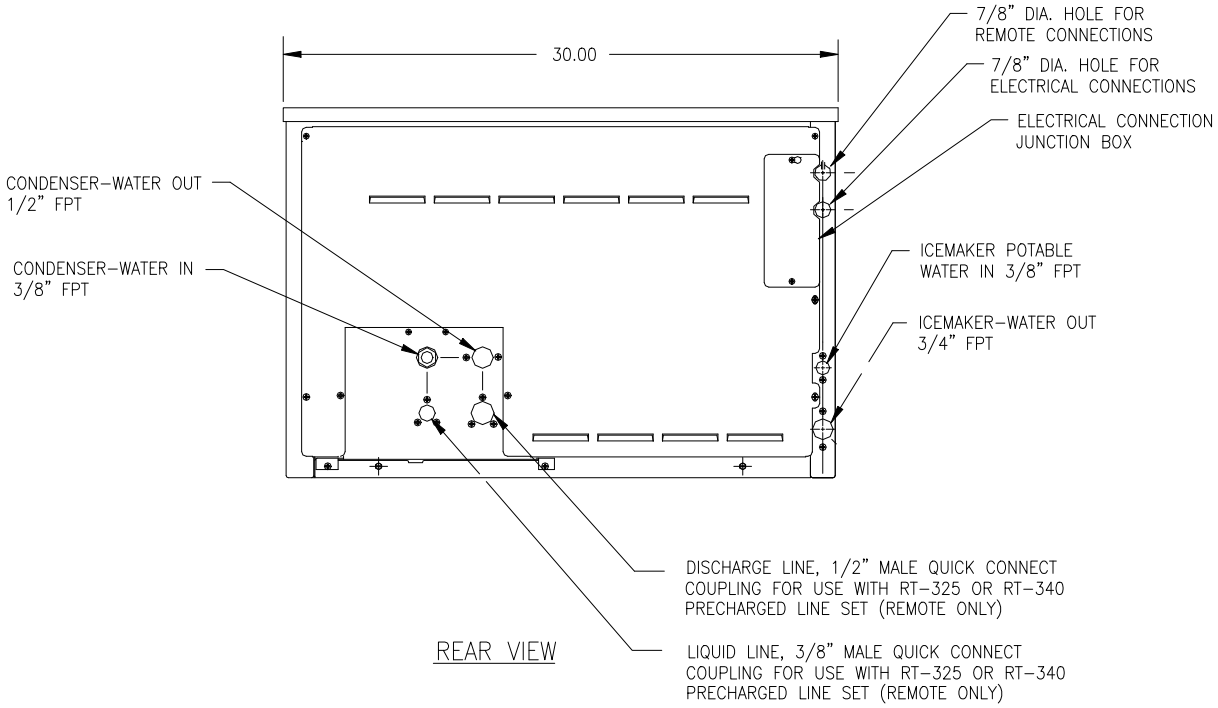

REAR VIEW

Electrical and Plumbing Requirements: ICE1406, ICE1806, ICE2106 (48 Inch Wide Cubers) Prior to January 2008

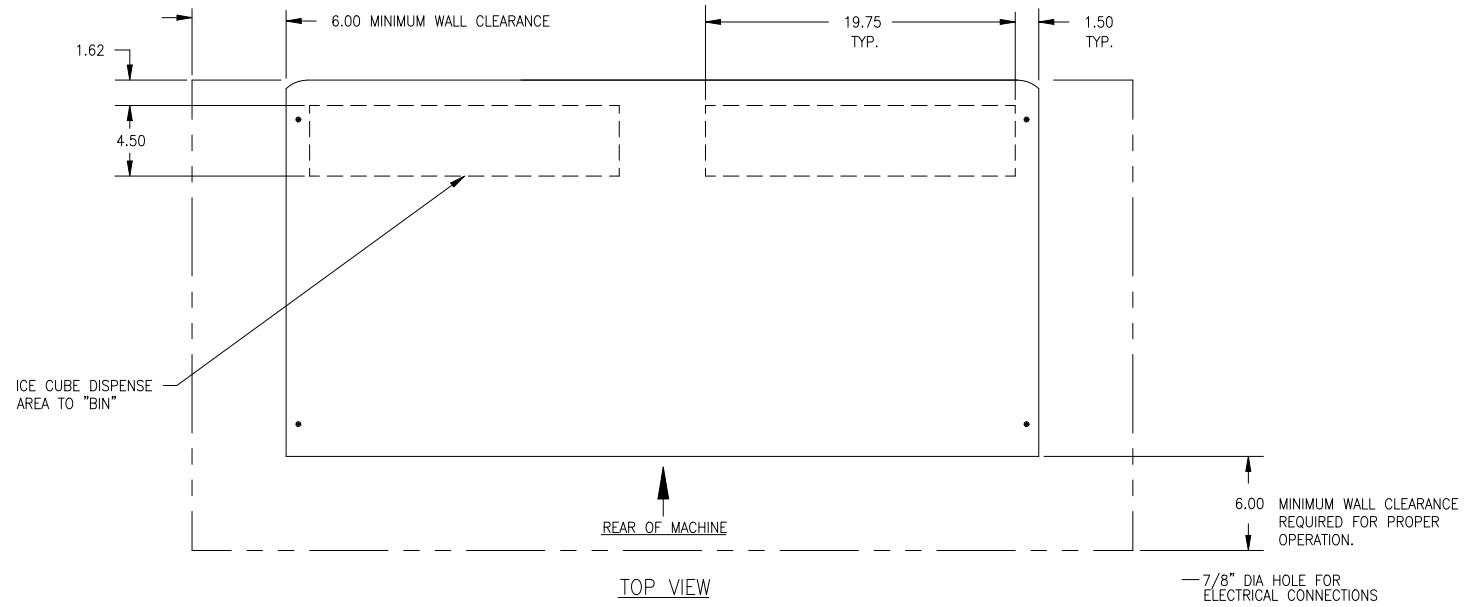

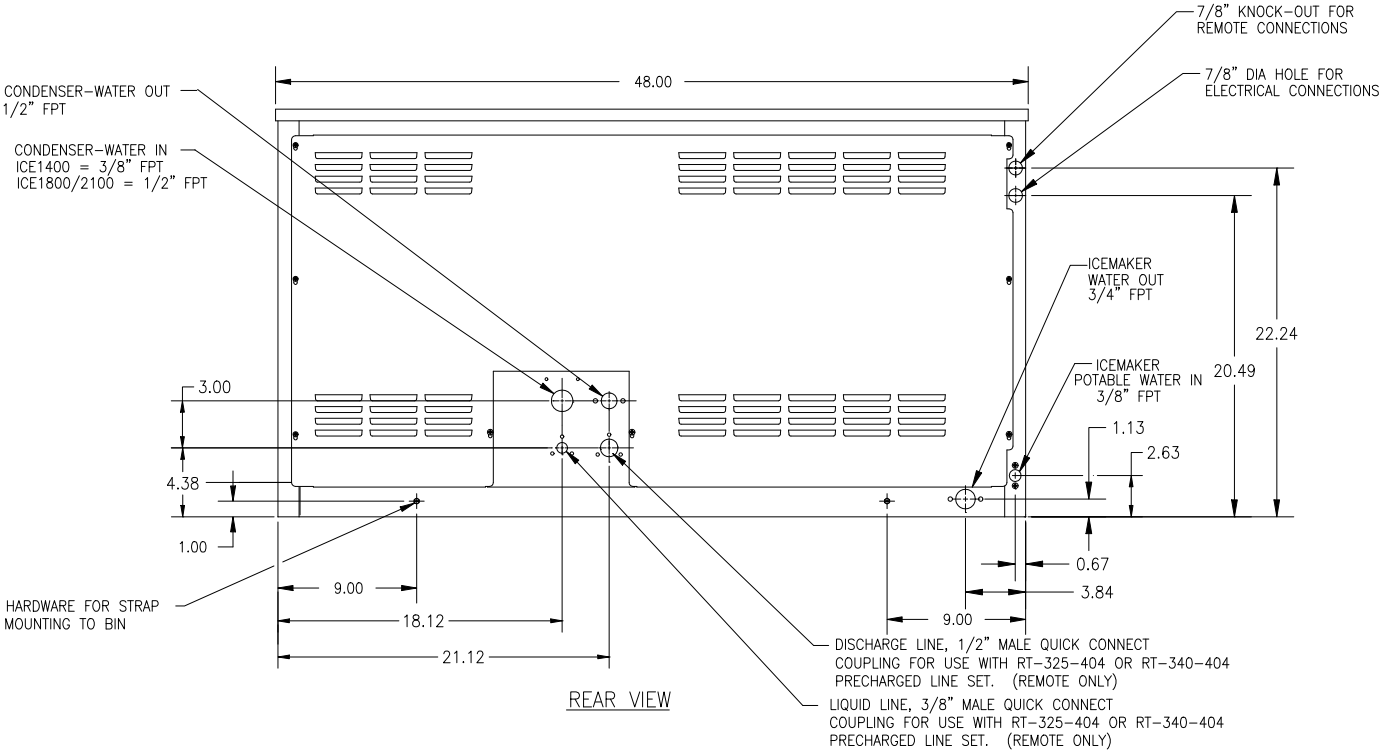

Electrical and Plumbing Requirements: ICE0320 and ICE0520 (22 Inch Wide Cubers)

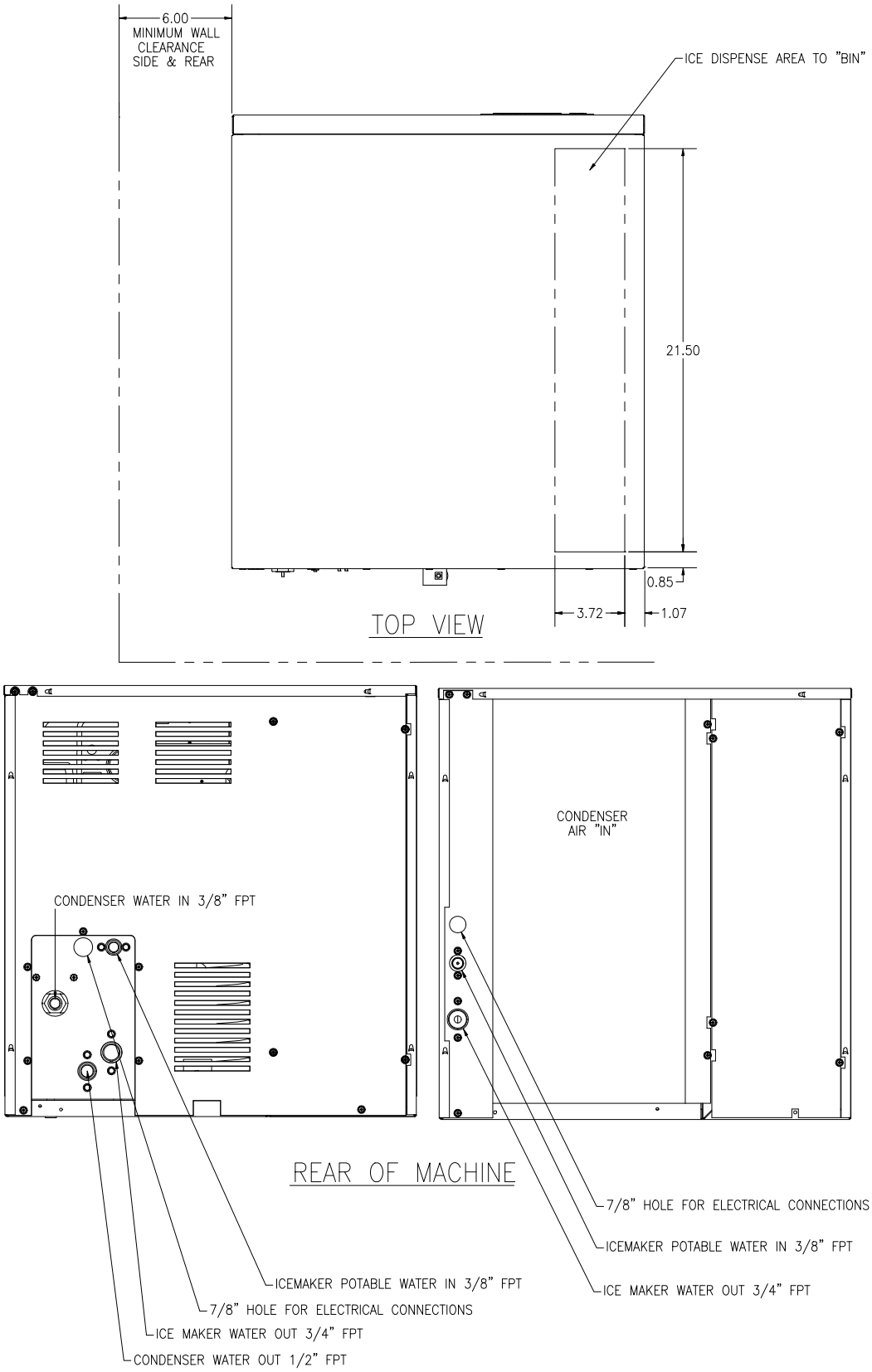

Electrical and Plumbing Requirements: ICE1400, ICE1800 and ICE2100 Revision 3 (From January 2008)

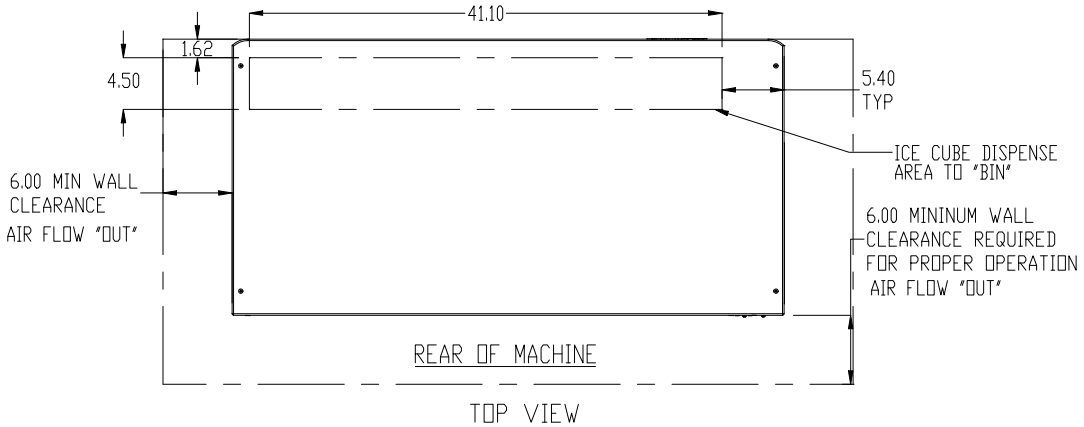

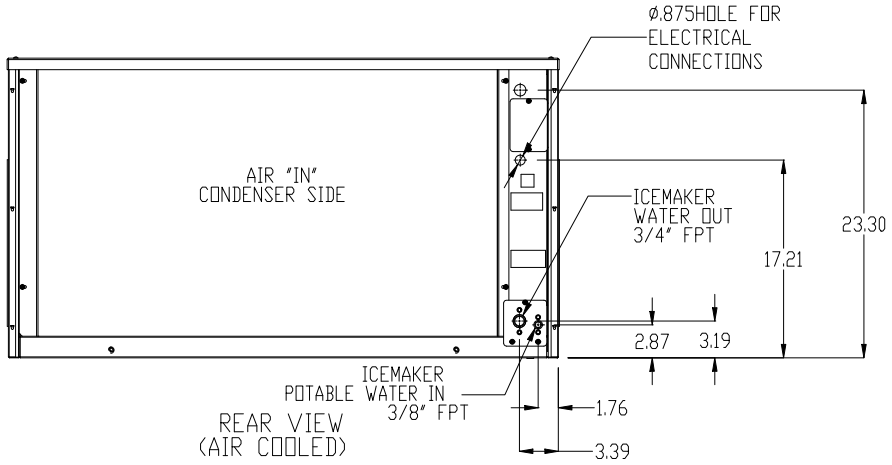

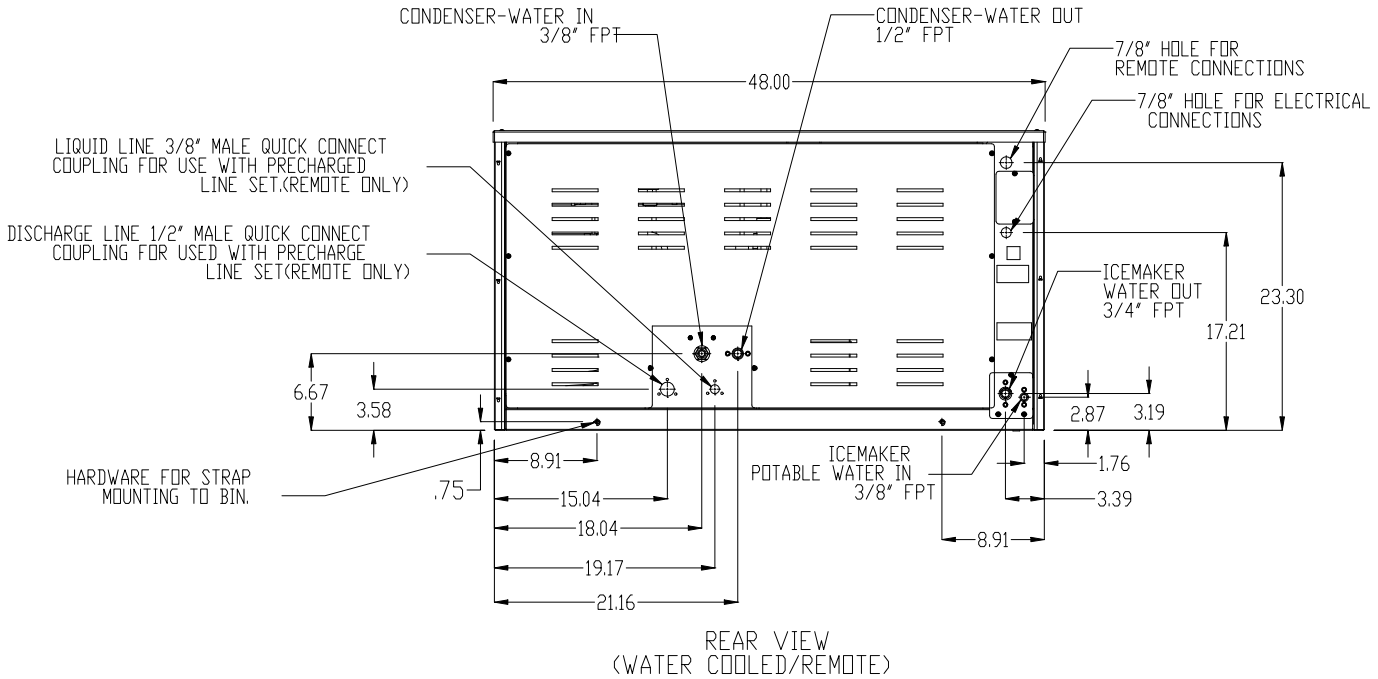

Electrical and Plumbing Requirements: ICE1506 Remote

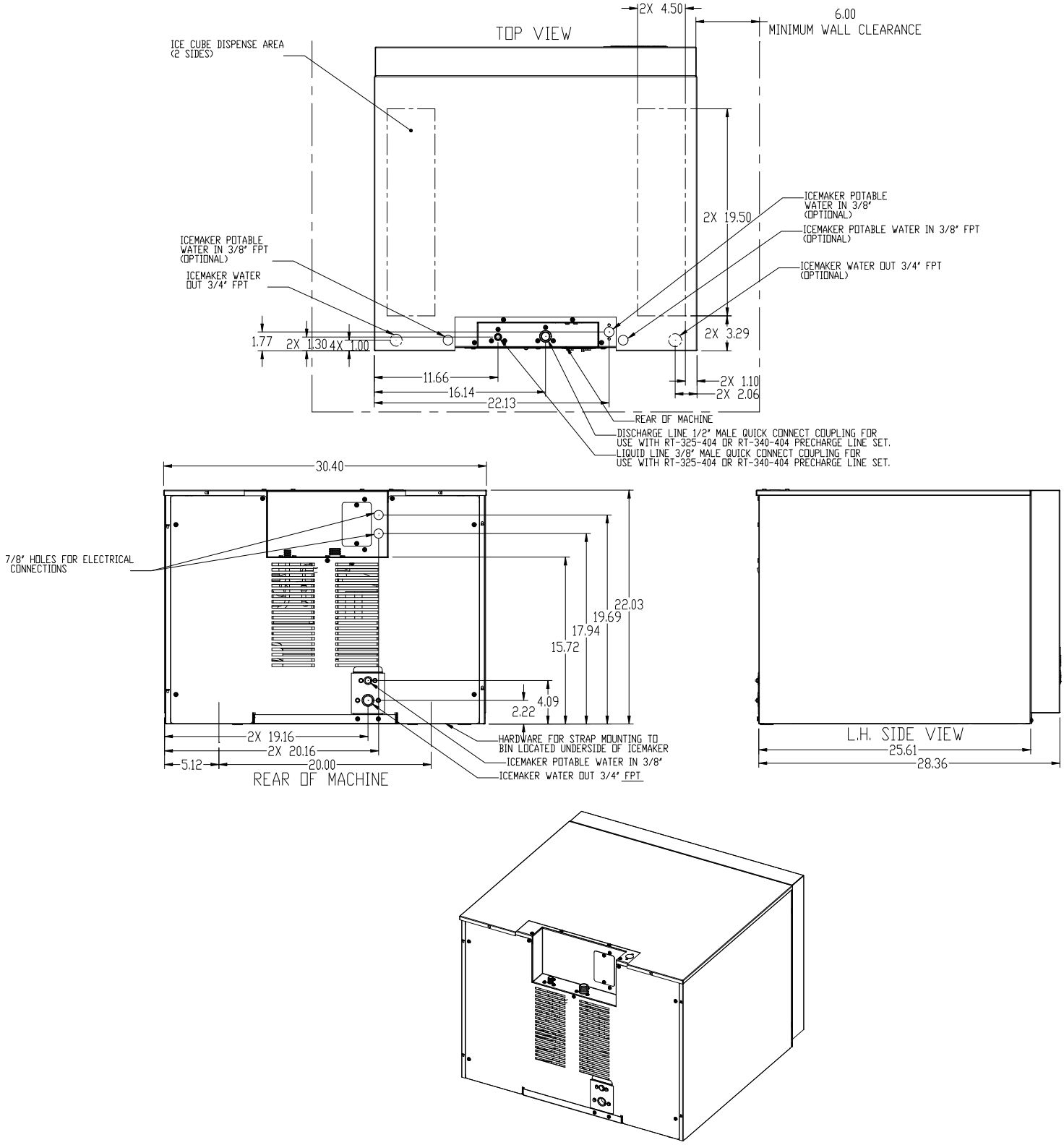

Electrical and Plumbing Requirements: ICE1506R5 Remote

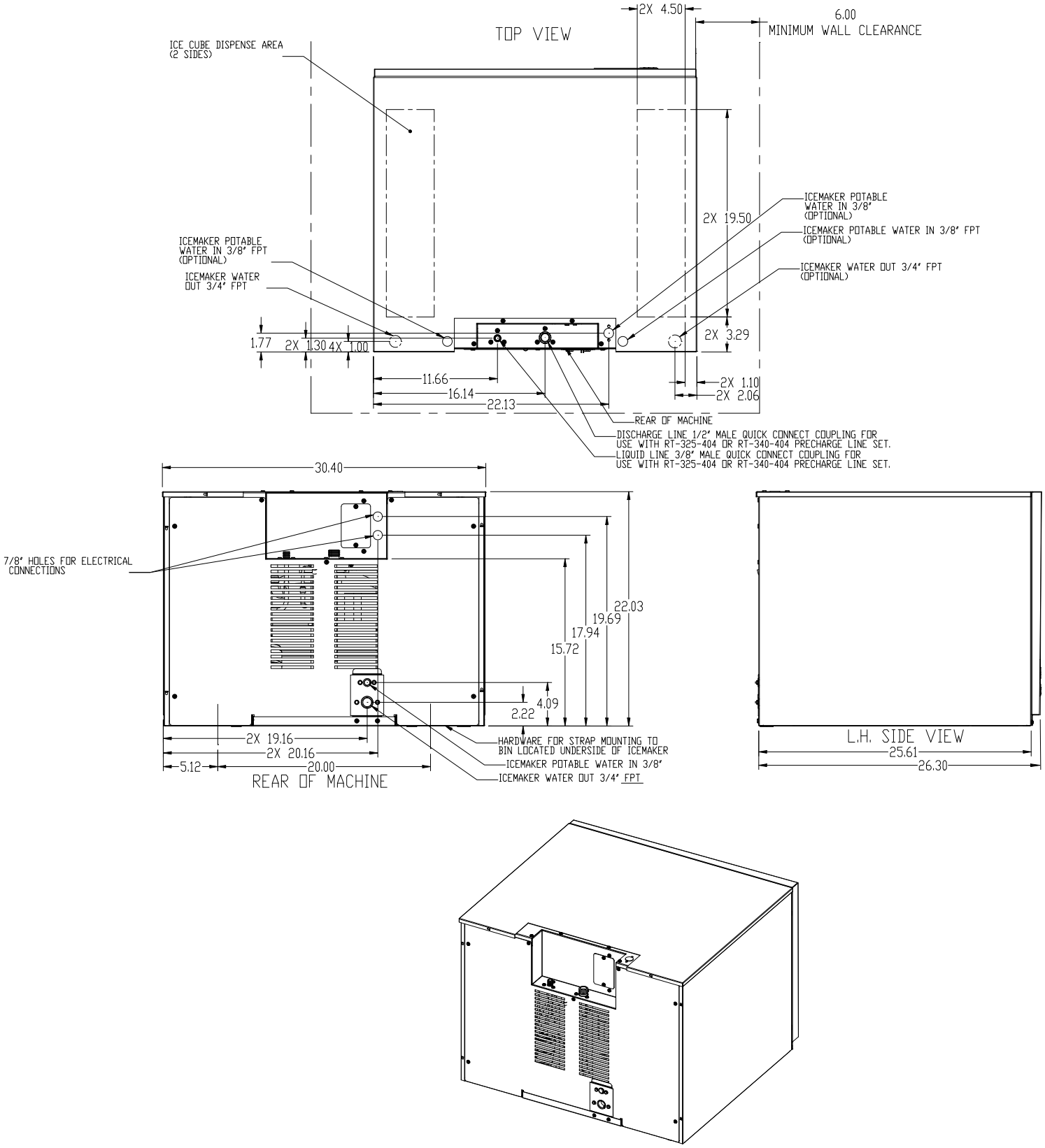

Electrical and Plumbing Requirements: ICE0726 and ICE0926 Remote

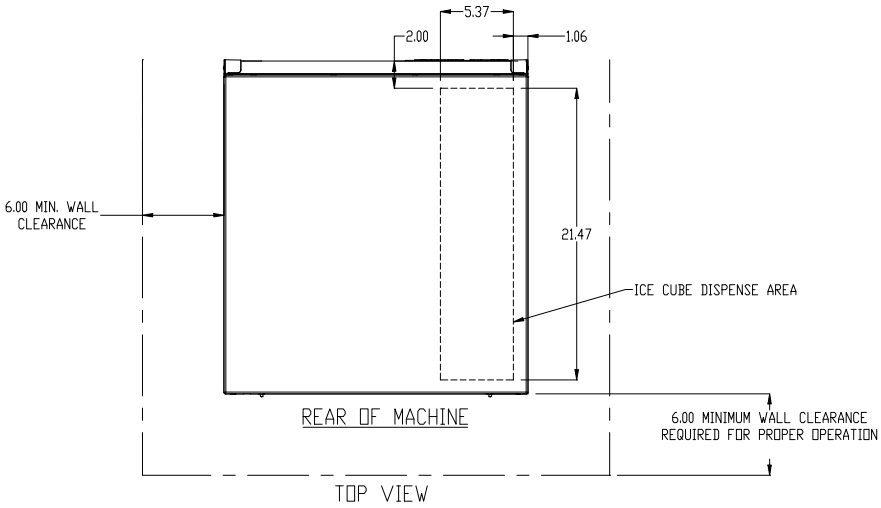

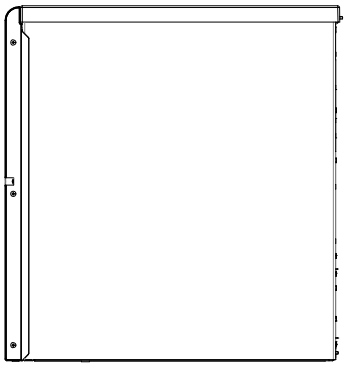

R.H. SIDE VIEW

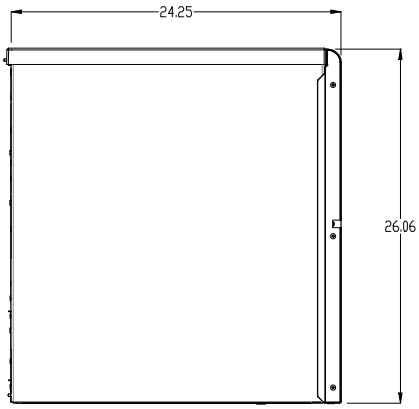

L.H. SIDE VIEW

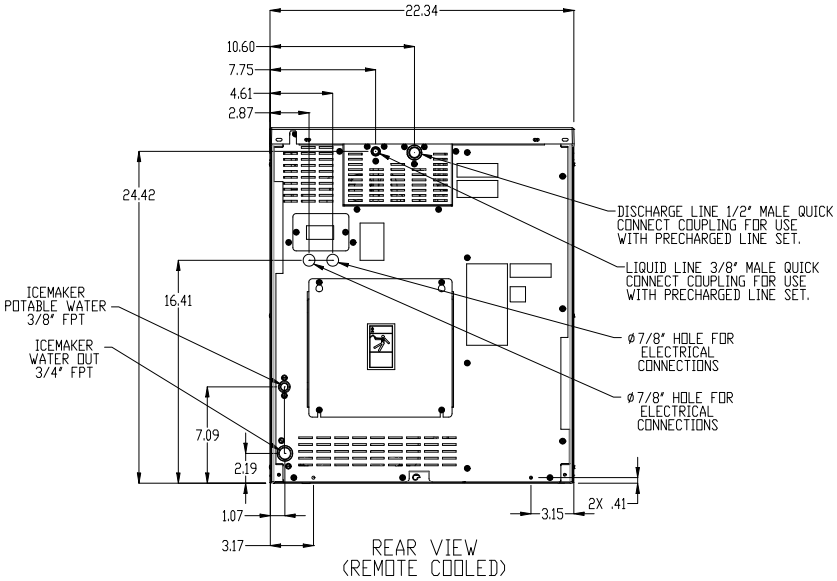

REAR VIEW
(REMOTE COOLED)

Electrical and Plumbing Requirements: **ICE1506HT Air Cooled, Top Air Discharge**

Clearance Requirements for the
ICE1506HT to insure proper air circulation.

Top 8 inches

Back 6 inches

Sides 2 inches

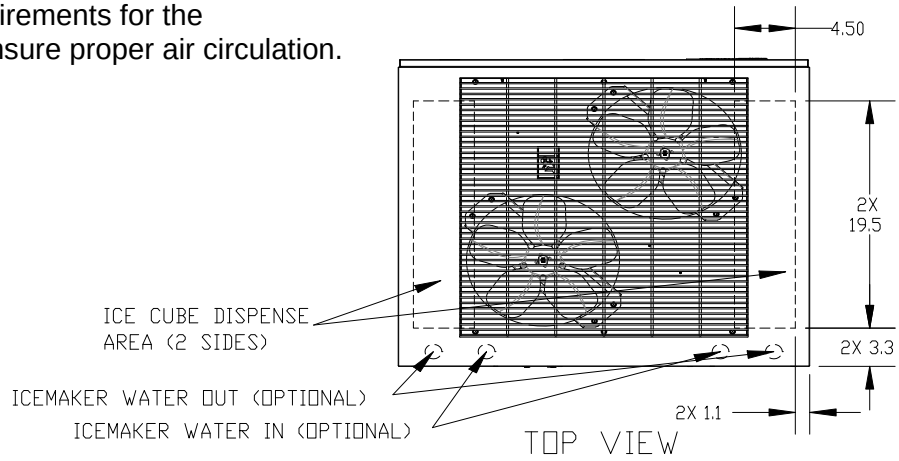

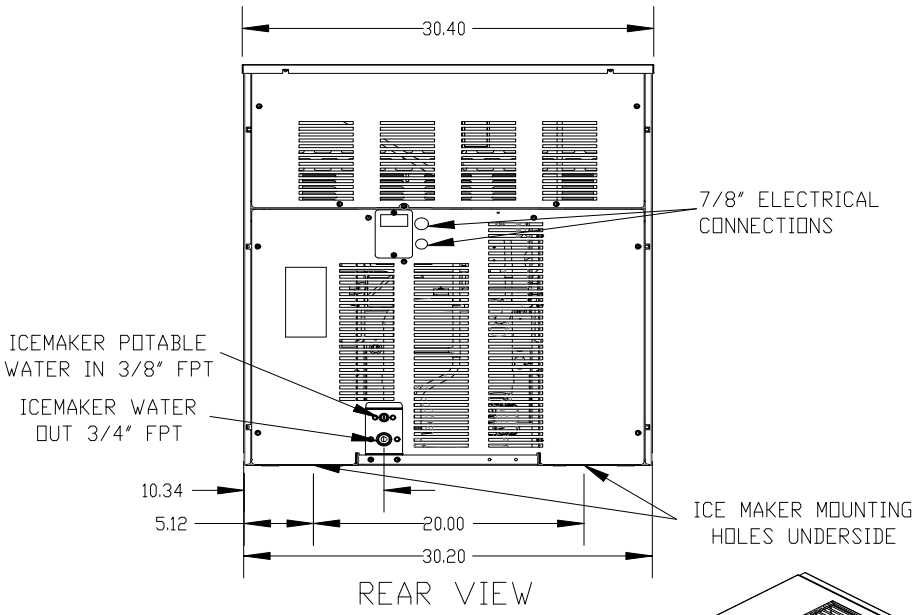

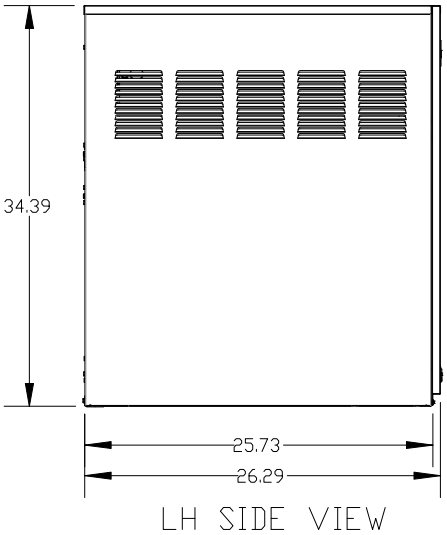

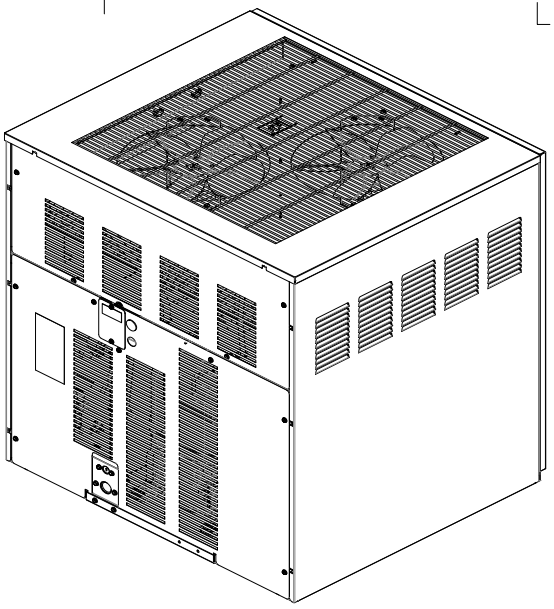

Remote Condenser Installation

For proper operation of the Ice-O-Matic ice machine, the following installation guidelines must be followed. Failure to do so may result in loss of production capacity, premature part failure, and may void all warranties.

Installation Guidelines (Pre VRC Models)

- Ambient operating temperatures: -20°F (-28.9°C) to 120°F (48.9°C)
- Maximum refrigerant line length: 60 ft. (18.29 Meters)
- Maximum vertical rise: 16 ft. (4.88 Meters)
- Minimum condenser height: **ICE Series** ice machine remote condensers must not be installed more than 6 feet (1.3 meters) below the refrigerant line quick connects at the rear of the ice machine. No part of the refrigerant lines, between the ice machine and the remote condenser, should fall below this point. **Condensers must have a vertical airflow**.

When installing the condenser above the machine:

DO Slope refrigerant lines downward toward compressor.

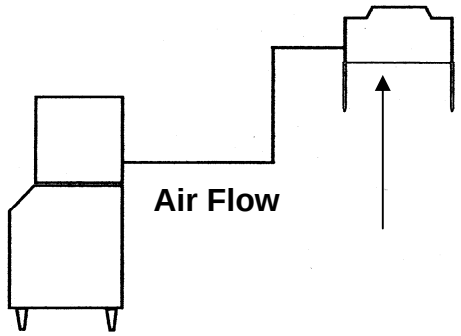

When installing condenser below the ice machine

DO Add 3 lbs (1361 grams) of refrigerant to system.

DO Slope refrigerant lines downward toward condenser

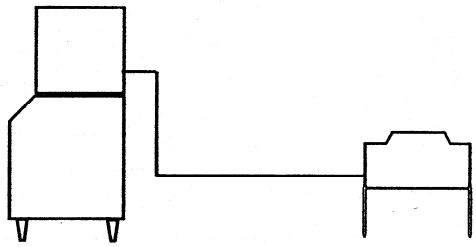

DO NOT Install any part of the refrigerant lines below the quick connect fittings at rear of machine.

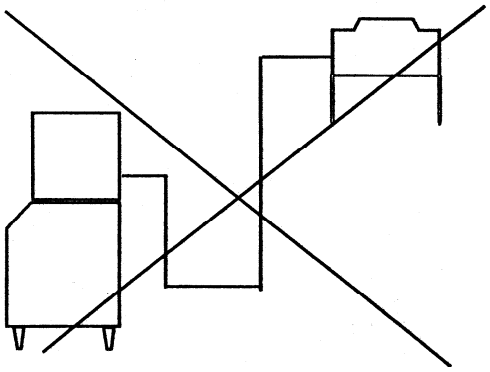

DO NOT Install the condenser lower than 6' (1.83 meters) below the quick connect fittings at rear of machine.

DO NOT Create oil traps in refrigerant lines by sloping lines downward then rising upward.

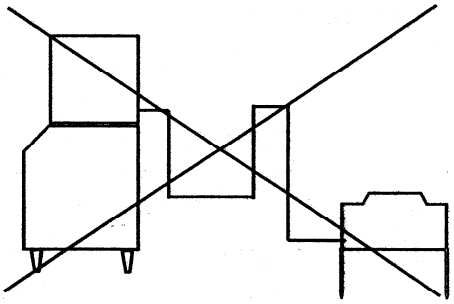

Connecting Precharged Line Sets

Before connecting line set fittings to the machine and condenser lubricate threads and o'rings with refrigerant oil. Leak check connections after connecting.

Note: Remote models with the mixing valve installed in the ice machine with sixty (60) foot lineset runs will need an additional fifteen (15) ounces of refrigerant added.

The following remote ice makers incorporate the mixing valve in the condenser. This configuration allows up to a 100 foot calculated remote line set run. Reference the diagram below to calculate the maximum 100 foot line set run. Maximum **actual line set run** is limited to 100 ft. Add ¼ ounce of refrigerant for each actual foot from 75 feet to 100 feet actual lineset run.

ICE Machine Model Number	Remote Condenser Model Number
ICE2100R**3**&**4** &**5**	VRC5061B
ICE1800R**3**&**4** &**5**	VRC5061B
ICE1400R**3**&**4** &**5**	VRC2661B
ICE1506HR**2**&**3**&**4**	VRC2661B
ICE1006R**3**&**4**&**5**	VRC2061B
ICE0926	VRC2061B
ICE0806R**3**&**4** &**5**	VRC2061B
ICE0726	VRC2061B
ICE0606R**3**&**4**&**5**&**6**	VRC1061B
ICE0500R**3**&**4** &**5**	VRC1001B

Limitations for new remote machines that have the mixing valve mounted in the condenser.
Maximum Rise is 35 feet.
Maximum Drop is 15 feet.
Maximum equivalent run is 100 feet.

Formula for figuring maximum equivalent run is as follows:
Rise x 1.7 + Drop x 6.6 + horizontal run = equivalent run.

Examples: 35 ft. rise x 1.7 + 40 ft. horizontal = 99.5 equivalent feet line run

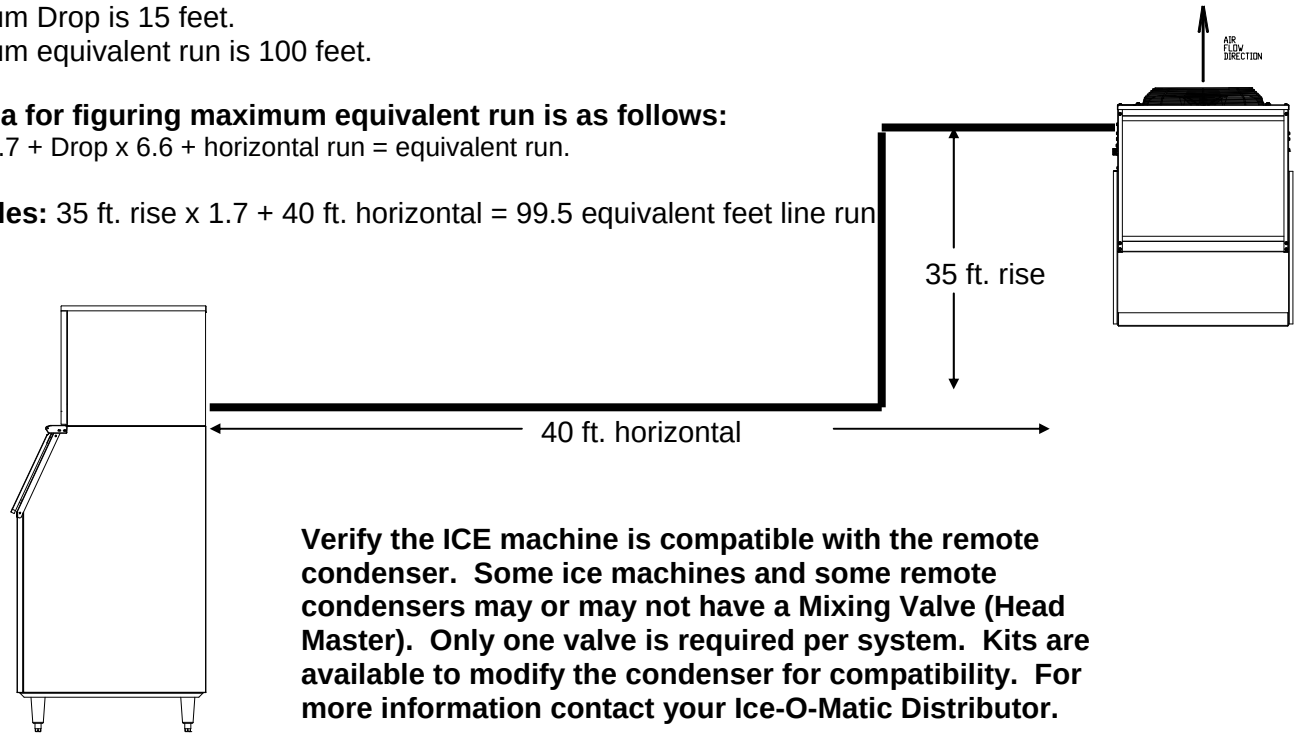

Verify the ICE machine is compatible with the remote condenser. Some ice machines and some remote condensers may or may not have a Mixing Valve (Head Master). Only one valve is required per system. Kits are available to modify the condenser for compatibility. For more information contact your Ice-O-Matic Distributor.

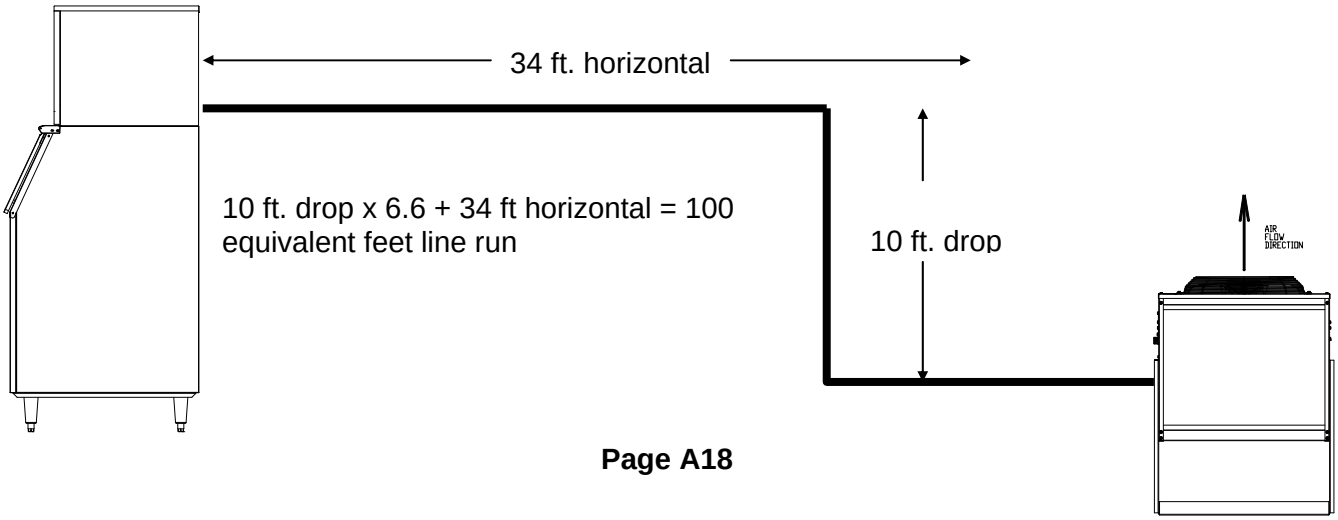

How the ICE Machine Works

A general description of how the **ICE Series** cubers work is given below. The remainder of the manual provides more detail about the components and systems.

With the **ICE/OFF/WASH** switch in the **ICE** position, the compressor, water pump and condenser fan motor (when applicable) will energize starting the freeze cycle.

During the freeze cycle, water is circulated over the evaporator(s) where the ice cubes are formed. When the suction pressure has pulled down to the proper cut-in pressure of the timer initiate (pressure control), the contacts will close and energize the time delay module (timer). See Page **F3** for proper cut-in pressures. At this time the cubes will close to completion.

The remaining portion of the freeze cycle is determined by the timer setting. The timer is pre-set at the factory to achieve the proper ice bridge thickness but may need to be adjusted upon initial start-up.
The factory initial timer settings are **64 and 128 for a Half Cube** and **128 and 256 for a Full Cube.**

Once the amount of time on the timer has passed, the control relay will be energized and the machine will enter harvest. Power is now supplied to the water purge valve, hot gas valve, and the harvest motor. The water purge valve opens, and allows the water pump to purge the water remaining in the water, removing impurities and sediment. This allows the machine to produce clear ice cubes and keep mineral build up at a minimum. The hot gas solenoid opens allowing hot gas to go directly to the evaporator, heating the evaporator and breaking the bond between the evaporator and the ice slab.
Note: The operation of the Hot Gas Valve and Water Pump vary by model number, reference the wiring diagram on the specific model number for operation sequence.

The harvest assist motor, which is also energized during harvest, turns a slip clutch, which pushes a probe against the back of the ice slab. Once the evaporator has reached approximately 40°F (4.5°F) in temperature, the slip clutch overcomes the bonding of the ice to the evaporator and pushes the slab of ice off of the evaporator and into the storage bin. The clutch also actuates a switch that rides on the outer edge of the clutch. When the clutch completes one revolution, the switch is tripped and the machine enters the next freeze cycle.
Note: Units produced from July of 2015 utilize an improved drive motor which eliminated the clutch assembly.

When ice drops into a full bin during harvest, the splash curtain is held open which activates a bin switch shutting the machine off. When ice is removed from the bin, the splash curtain will close and the machine will come back on.

Undercounter Bin Removal-ICEU300/305 and ICEU150-220/225/226 (From 6/08) Series

The storage bin can be removed by:

1 Remove the lower grill.
2. Remove two screws securing bin to cabinet base.
3. Remove the thumbscrews from the back wall of the bin.
4. Disconnect bin drain.
5. Lift front of bin slightly and pull bin forward to remove.

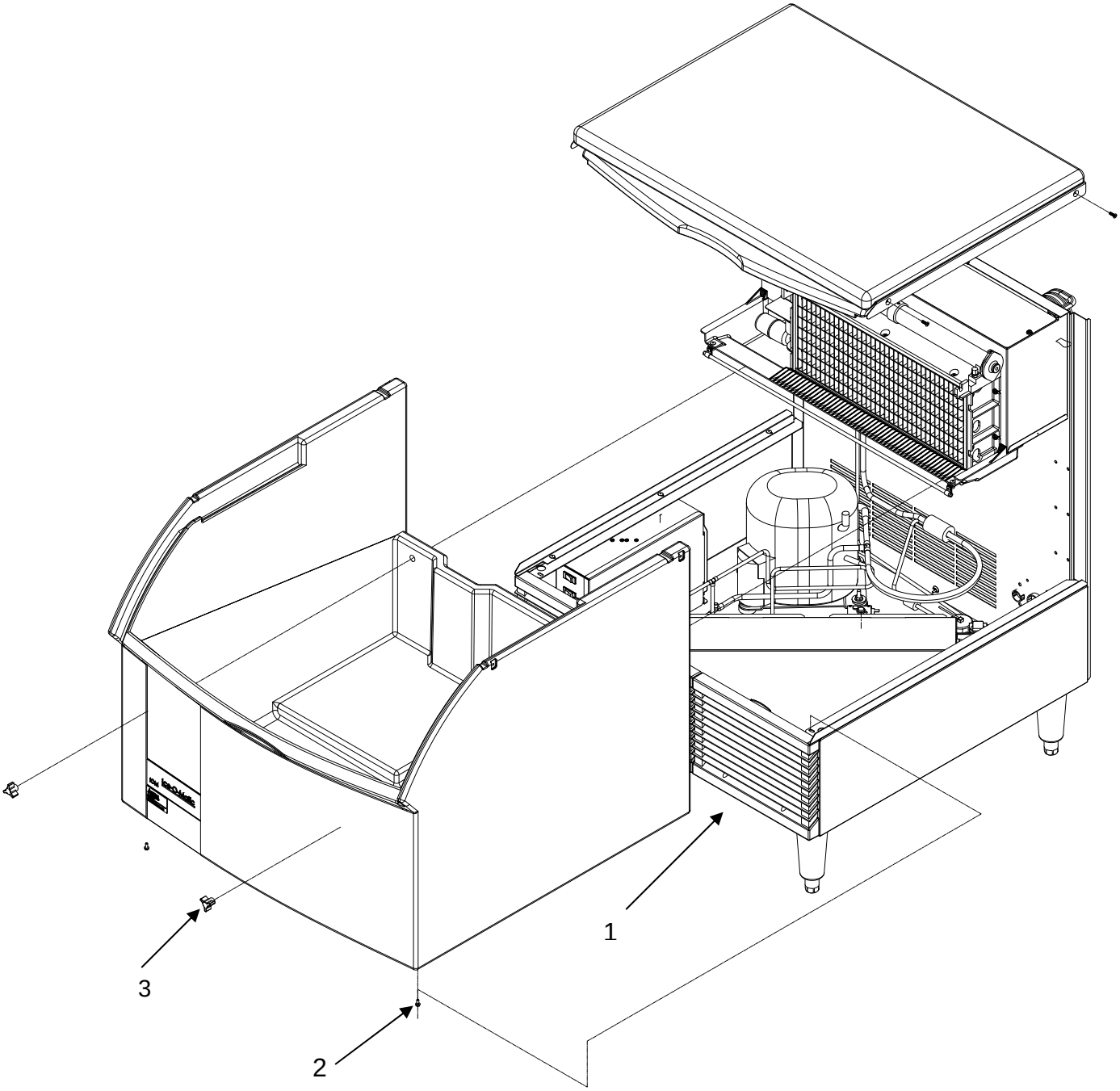

Undercounter Bin Removal-ICEU150/200/220/225/226 Series (Prior to 6/08)

The storage bin can be removed by:

1. Remove the two screws at the rear of the top panel.
2. Remove the two screws from the front panel.
3. Remove two screws securing bin to cabinet base.
4. Disconnect bin drain.
5. Lift front of bin slightly and pull bin forward to remove.

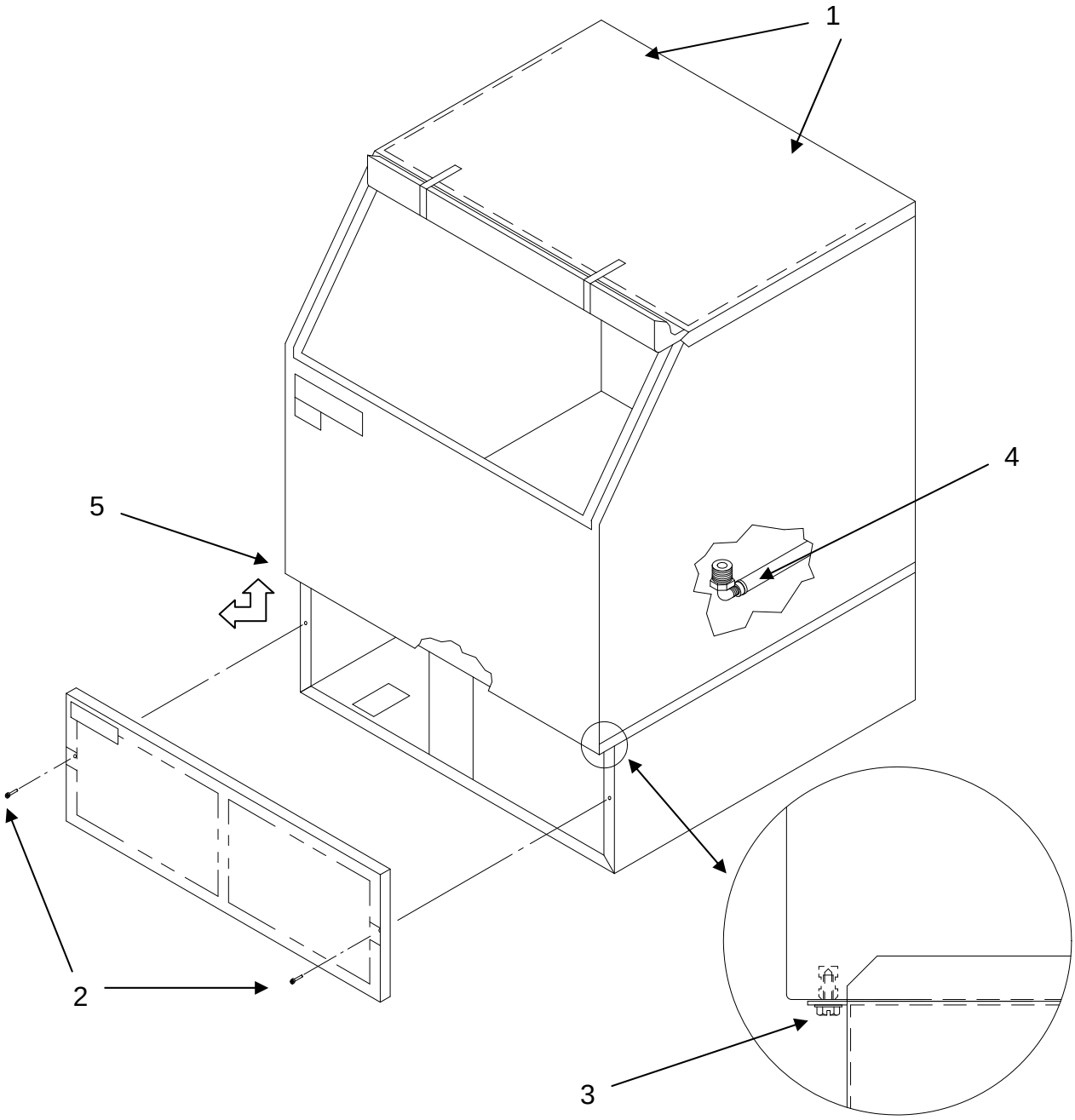

Warranty Information

Every Ice-O-Matic machine is backed by a warranty that provides both parts and labor coverage.

Cube Ice Makers – ICE Series
Three years Parts and Labor.
Five years Parts coverage on the evaporator and the compressor.
Seven years Parts and Labor on the evaporator when you purchase an Ice-O-Matic water filter with your cube ice maker and replace the filter every 6 months AND register it on our website (available in the U.S. and Canada only).

Warranty If, during the warranty period, customer uses a part for this Ice-O-Matic equipment other than an unmodified new part purchased directly from Ice-O-Matic, Ice-O-Matic Distributors, or any of its authorized service agents and/or the part being used is modified from its original configuration, this warranty will be void. Further, Ice-O-Matic and its affiliates will not be liable for any claims, damages or expenses incurred by customer which arises directly or indirectly, in whole or in part, due to the installation of any modified part and/or part received from an unauthorized service center. Adjustments are not covered under warranty.

Warranty Procedure If the customer is using a part that results in a voided warranty and an Ice-O-Matic authorized representative travels to the installation address to perform warranty service, the service representative will advise customer the warranty is void. Such service call will be billed to the customer at the authorized service center's then-applicable time and material rates.

Ice-O-Matic Warranty

Every Ice-O-Matic ice maker is backed by a warranty that provides both parts and labor coverage. To view the warranty details, register products, or check your warranty status visit the "Warranty and Water Filter Registration" page on www.iceomatic.com

Maintenance

Note: Maintenance should be performed by an Ice-O-Matic trained Service Technician.

Electrical shock and/or injury from moving parts inside this machine can cause serious injury. Disconnect electrical supply to machine prior to performing any adjustments or repairs.

⚠WARNING

Failure to perform the required maintenance at the frequency specified will void warranty coverage in the event of a related failure. To insure economical, trouble free operation of the machine, the following maintenance is required every 6 months.

Maintenance Procedure

1. Clean the ice-making section per the instructions below. Cleaning should be performed a minimum of every 6 months. Local water conditions may require that cleaning be performed more often.

2. Check ice bridge thickness. See page **F4** for proper thickness and adjustment procedure.

3. Check water level in trough. See page **D1** for proper water level and adjustment.

4. Clean the condenser (air-cooled machines) to insure unobstructed air flow.

5. Check for leaks of any kind: Water, Refrigerant, Oil, Etc.

6. Check the bin switch for proper adjustment. See page **F9** for bin switch adjustment.

7. Check the cam switch adjustment. See page **F8** for cam switch adjustment.

8. Check the water valve (water-cooled machines) for proper adjustment. See page **E2**.

9. Check all electrical connection.

10. Oil the fan motor if the motor has an oil fitting. (Self contained air-cooled models only)

ICE Machine and/or Bin/Dispenser Cleaning and Sanitizing Instructions
Cleaning should be scheduled at a minimum of twice per year.
Sanitizing should be performed after each cleaning or more frequently as required.
Note: Electrical power will be ON when performing the following cleaning instructions.

The cleaning and sanitizing of any commercial ice machine are important procedures all operators need to have in their preventive maintenance protocol. While similar, these two procedures are uniquely different and accomplish different things. Cleaning or de-liming, dissolves the mineral deposits on the evaporator and removes scale, calcium and other mineral buildup. Sanitizing disinfects the machine and removes microbial growth including mold and slime.

In either case, it is important to use solutions that do not harm the ice machine. Never use cleaning or sanitizing solutions that contain Nitric Acid, Sulfuric Acid, Hydrochloric Acid, Carbolic Acid, Acetic Acid, diluted Acetic Acid or non-food-grade vinegar (concentration of acetic acid greater than 6% and does not contain enzymes created in processing) or any chlorine-based solution such as bleach, chlorine dioxide or any type of salts such as potassium chloride (potassium salts) or sodium chloride. Check the label or the manufacturer's Material Safety Data Sheet (MSDS) to be sure. These chemicals can attack the surface of the evaporator as well as other metal components causing corrosion and flaking. Reverse Osmosis (RO) water can be very acidic and can attack the evaporator and other metal in the ice machine. Because the RO process removes all minerals and metals from the water it can promote the faster growth of microbial, mold and slime. If RO water is used, Ice-O-Matic recommends the water pH is verified to be a neutral 7.0 to minimize the corrosive effects. Incorrect cleaners, sanitizers, and RO water that does not have a neutral pH could void the machine's warranty.

Cleaning
Prior to Cleaning the ice machine and/or Bin/Dispenser, perform the following:
1. Remove the ice machine front panel.
2. Make sure that all the ice is off of the evaporator. If ice is being made, wait for cycle completion then turn the machine "**OFF**" at the **ICE/OFF/WASH** selector switch.
3. Turn off the potable water supply to the ice machine.
4. Remove all ice in the storage bin. (**Required for cleaning and/or sanitizing**)

Cleaning Instructions-Ice Machine
1. Initiate the wash cycle at the **ICE/OFF/WASH** switch by placing the switch in the **"WASH"** position. Depress the **Purge Switch** to flush the remaining water from the water trough. Release the **Purge Switch** when the water trough is empty
2. Terminate the wash cycle at the **ICE/OFF/WASH** switch by placing the switch in the **"OFF"** position.
3. Add recommended amount of approved nickel safe ice machine cleaner (diluted per manufacturer's instructions) to the water trough. (Reference cleaner Manufacturer's instructions on the package)
4. Initiate the wash cycle at the **ICE/OFF/WASH** switch by placing the switch in the **"WASH"** position. Allow the cleaner to circulate for approximately 15 minutes to remove mineral deposits.
5. Depress the **Purge Switch** and hold until the ice machine cleaner has been flushed down the drain
4. Terminate the wash cycle at the **ICE/OFF/WASH** switch by placing the switch in the **"OFF"** position. Remove the splash curtain and inspect the evaporator and water spillway to ensure all mineral residue has been removed.
5. If necessary, wipe the evaporator, spillway and other water transport surfaces with a clean soft cloth to remove any remaining residue. If necessary, remove and clean the water trough thoroughly to remove all scale or slime build-up, remove the water distribution tube, disassemble and clean with a bottlebrush. Reassemble all components and repeat steps 2 through 5 as required to remove any remaining residue.
7. **Sanitizing the Ice Machine is required after cleaning per Sanitizing Instructions**

Cleaning Instructions-Storage Bin/ Dispenser
1. Open the bin door and remove all of the ice in the storage bin, store the ice in a clean container for reuse or discard.
2. Add recommended amount of approved nickel safe ice machine cleaner (diluted per manufacturer's instructions) (Reference cleaner Manufacturer's instructions on the package)
3. Thoroughly wash all surfaces within the bin, this includes the bin door, bin walls, window track and snout area with soap and water and rinse. Note: An extended handle soft bristle brush may be required.
4. Allow the mineral deposits to absorb the cleaner for approximately 15 minutes to remove and loosen the mineral deposits. Note: This includes the bin drain.
5. Thoroughly wash all surfaces within the bin, this includes the bin door, bin walls, window track and snout area with soap and water and rinse. Note: Repeat Steps 3, 4 and 5 as required.
6. **Sanitizing the Storage Bin/Dispenser is required after cleaning per Sanitizing Instructions.**

Sanitizing

Prior to Sanitizing the ice machine and/or Bin/Dispenser, perform the following:

1. Remove the ice machine front panel.
2. Make sure that all the ice is off of the evaporator. If ice is being made, wait for cycle completion then turn the machine "**OFF**" at the **ICE/OFF/WASH** selector switch.
3. Turn **OFF** the potable water supply to the ice machine.
4. Remove all ice in the storage bin. (**Required for cleaning and/or sanitizing**)

Sanitizing Instructions-Ice Machine

1. Use an EPA approved food equipment sanitizer at the solution mix recommended by the sanitizer manufacturer.
2. Add enough sanitizing solution to fill the water trough to overflowing and place the **ICE/OFF/WASH** switch to the **"WASH"** position and allow circulation to occur for 10 minutes and inspect water transport system for water leaks. During this time, wipe down all other ice machine splash areas. Inspect to insure that water transport system components are in the correct position.
3. Depress the **Purge Switch** and hold until sanitizer has been flushed down the drain. Turn **ON** the ice machine potable water supply and to flush the remaining diluted sanitizing solution out of the water trough for another 1 to 2 minutes.

4 Place the **ICE/OFF/WASH** switch to the **"ICE"** position and replace the front panel.

5. **Discard the first two ice harvests. DO NOT USE any ice produced from the cleaning solution**.

Sanitizing Instructions- Bin/ Dispenser

1. Use an EPA approved food equipment sanitizer at the solution mix recommended by the sanitizer manufacturer.
2. Sanitize the bin interior, this includes the bin door, bin walls, window track and snout area with an approved sanitizer using the directions for that sanitizer. Note: This includes the bin drain.
3. **Discard the first two ice harvests. DO NOT USE any ice produced from the cleaning solution.**

Common Questions

•Ice-O-Matic Ice Machine/Bin Cleaning

Cleaning or de-liming an ice machine refers to the process of removing mineral buildup and scale from the evaporator and other components. Ice-O-Matic recommends cleaning the ice machine at least every 6 months. More frequent cleaning may be needed depending on water quality and filtration system used. It is the responsibility of the operator to determine the optimal frequency for their particular environment. Cleaning will not remove microbial, mold, or slime. The machine should always be sanitized after cleaning.

Ice-O-Matic recommends a "nickel-safe" cleaner such as Nu-Calgon or equivalent. Typically the chemical composition is as follows:

- Water 53% to 82%
- Phosphoric Acid 15% to 40%
- Citric Acid 3% to 7%

⚠WARNING

Ice Machine Cleaner contains acids.
KEEP OUT OF THE REACH OF CHILDREN
Refer to ice machine cleaner manufactures emergency instructions on container label.

Ice-O-Matic recommends cleaning be done by a trained technician and that they follow detailed steps as prescribed in the Technical Service Manual.

Most cleaners list in their instructions an ounces to a gallon mixture for proper level of solution. Pouring undiluted cleaner directly into the water trough may not give proper dilution level. Ice-O-Matic recommends mixing in a plastic container before pouring into trough.

•Ice-O-Matic Ice Machine/Bin/Dispenser Sanitizing

Ice-O-Matic recommends sanitizing or disinfecting an ice maker a minimum of every six months. More frequent sanitizing may be needed if the machine is in a high yeast environment or if RO water is being used. It is the responsibility of the operator to determine the optimal frequency for their particular environment.

Ice-O-Matic recommends an EPA approved sanitizer such as Nu-Calgon IMS-II or equivalent. Sanitizing is a simple matter of running the EPA approved sanitizer through the ice machine/bin/dispenser and wiping down surfaces with the sanitizer.

If being done at the same time as the cleaning process, sanitizing must be done after the cleaning process. Follow the process as prescribed in the Owner's Manual.
Note: this process requires the ice be removed from the bin.

Winterizing Procedures

Important!
Whenever the ice machine is taken out of operation during the winter months, the procedure below must be performed. Failure to do so may cause serious damage and will void all warranties.

1. Turn off water to machine.

2. Make sure all ice is off of the evaporator(s). If ice is being made, initiate harvest or wait for cycle completion.

3. Place the ICE/OFF/WASH switch to the **"OFF"** position.

4. Disconnect the tubing between the water pump discharge and water distribution tube.

5. Drain the water system completely.

6. On water cooled machines, hold the water regulating valve open by prying upward on the water valve spring with a screwdriver while using compressed air to blow all the water out of the condenser.

7. Remove all of the ice in the storage bin and discard.

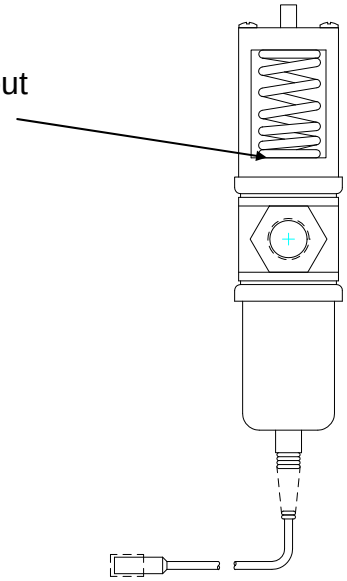

Cleaning Stainless Steel and Aluminum

Commercial grades of stainless steel and aluminum are susceptible to rusting and corrosion if not properly maintained. It is important that you properly care for the stainless steel and aluminum surfaces of your ice machine and bin to avoid the possibility of rust or corrosion. Use the following recommended guidelines for keeping your machine looking like new:

1. **Clean the stainless steel and aluminum thoroughly once a week.** Clean frequently to avoid build-up of hard, stubborn stains. Also, hard water stains left to sit can weaken the metals corrosion resistance and lead to rust or corrosion. Use a nonabrasive cloth or sponge, working with, not across, the grain.

2. **Don't use abrasive tools to clean the metal surface.** Do not use steel wool, abrasive sponge pads, wire brushes or scrapers to clean the metal.

3. **Don't use cleaners that use chlorine or chlorides.** Do not use chlorine bleach products to clean the metal surfaces. Chlorides break down the metals protective layer.

4. **Rinse with clean water.** If chlorinated cleansers are used, you must thoroughly rinse the surface with clean water and wipe dry immediately.

5. **Use the right cleaning agent.** The table below lists the recommended cleaning agents for common metal cleaning problems:

Cleaning Activity	Cleaning Agent	Method of Application
Routine cleaning	Mild dish Soap, Ammonia, Glass Cleaner, or mild detergent with water. Household Kitchen Cleaning chemicals approved For metal surfaces	Apply with a clean cloth or sponge. Rinse with clean water and wipe dry.
Removing grease or fatty acids	Oven cleaners.	Apply generously, allow to stand for 15-20 minutes. Rinse with clean water. Repeat as required.
Removing hard water spots and scale.	Vinegar	Swab or wipe with clean cloth. Rinse with clean water and dry.

How To Use The Troubleshooting Trees

The troubleshooting trees were developed to be used in conjunction with the service information in the sections that follow. If used together as intended, these two parts of the manual will allow the ice machine service technician to quickly diagnose many of the problems encountered with the ice machines. When used as designed, the troubleshooting trees can lead you from a general symptom to the most likely component to suspect as the cause of the problem. The trees are not designed to be “parts changer guides”: please do not use them as such.

Components returned to the factory for warranty are tested by the factory and will not be covered under the warranty policy if they are not defective.

The troubleshooting trees are made of three types of boxes:

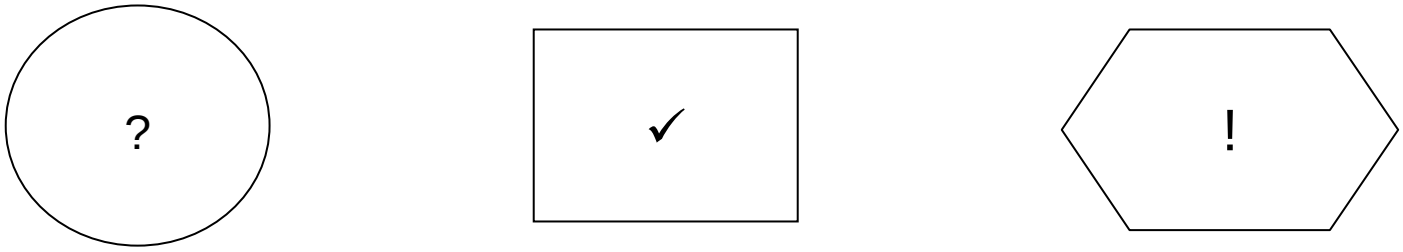

QUESTION boxes (Circle) ask a yes/no question and the answer will lead to either another question box, a check box or a solution box.

CHECK boxes (Rectangle) will suggest a point to check for proper operation, and will often refer you to a page in the service information sections of this manual. The result of the check may lead to another box, or a solution box.

SOLUTION boxes (Hexagon) suggest the most likely component to cause the malfunction described in the heading of the tree. When reaching a solution box, **DO NOT** immediately assume the component is defective. The final step is to verify that the component is indeed defective, by using the service information in the sections that follow.

To use the troubleshooting trees, first find the page with the heading describing the type of problem occurring. Begin at the top of the page and follow the tree, step-by-step. When a check box is reached, it may be necessary to refer to another section in the manual.

Once a solution box is reached, refer to the appropriate section to verify that the component in the solution box is, indeed, the problem. Adjust, repair or replace the component as necessary.

Troubleshooting Trees Table Of Contents

Machine Does Not Run	C3
Machine Runs, Does Not Make Ice	C4 – C5
Slow Production (Cube Formation Good)	C6
Low Suction Pressure	C7
High Suction Pressure	C8
Cubes Are Hollow	C9
Uneven Bridge Thickness	C10
Ice Bridge Thickness Varies Cycle To Cycle	C11
Machine Produces Cloudy Ice	C12
Poor Water Distribution Over Evaporator	C13
Machine Does Not Enter Harvest	C14
Machine Enters Harvest, Then Returns To Freeze Prematurely	C15
Length Of Harvest Excessive	C16
Ice Does Not Release From Evaporator	C17
Hot Evaporator, Low Suction Pressure (Remote Only)	C18

Machine Does Not Run

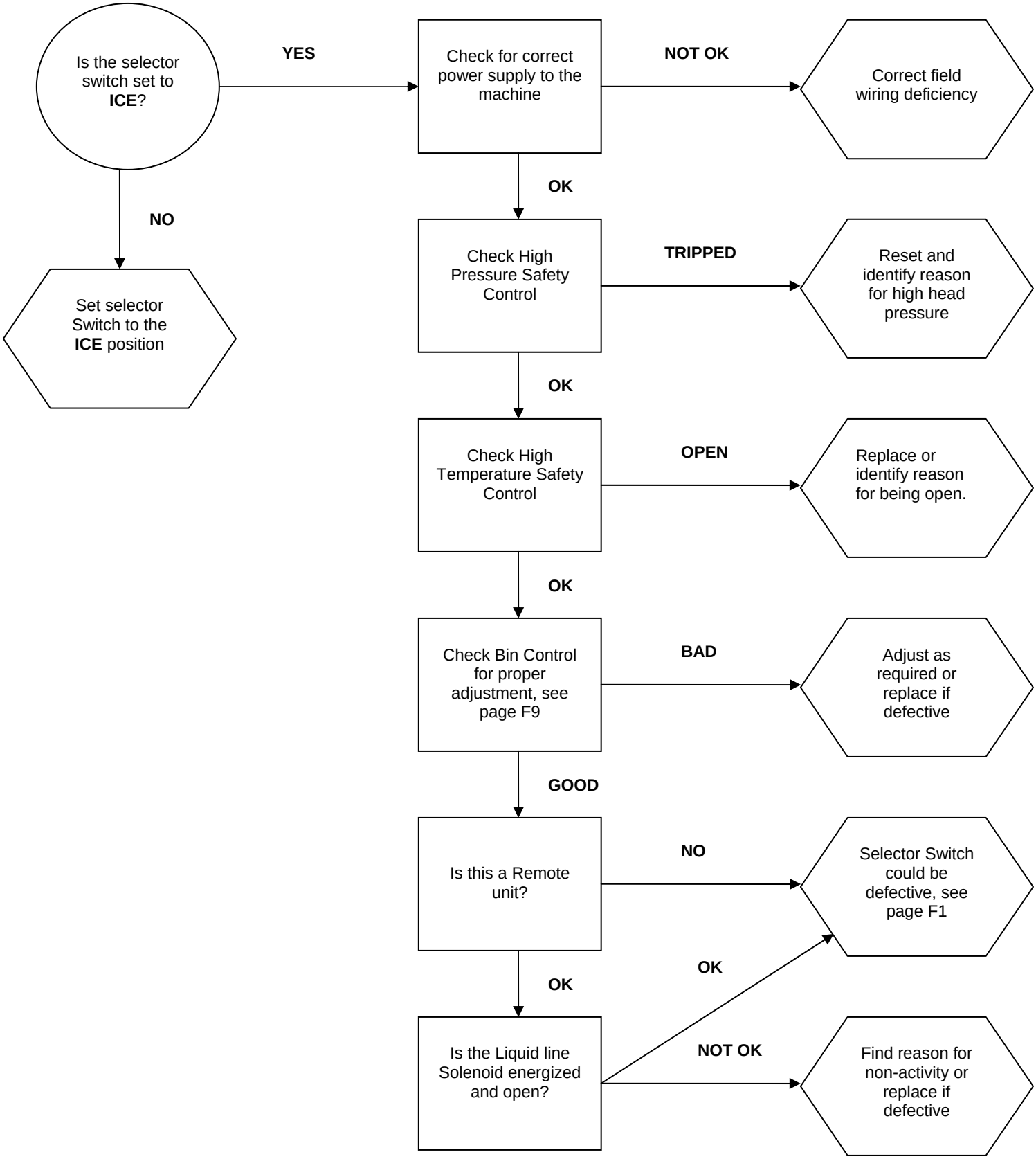

Machine Runs, Does Not Make Ice

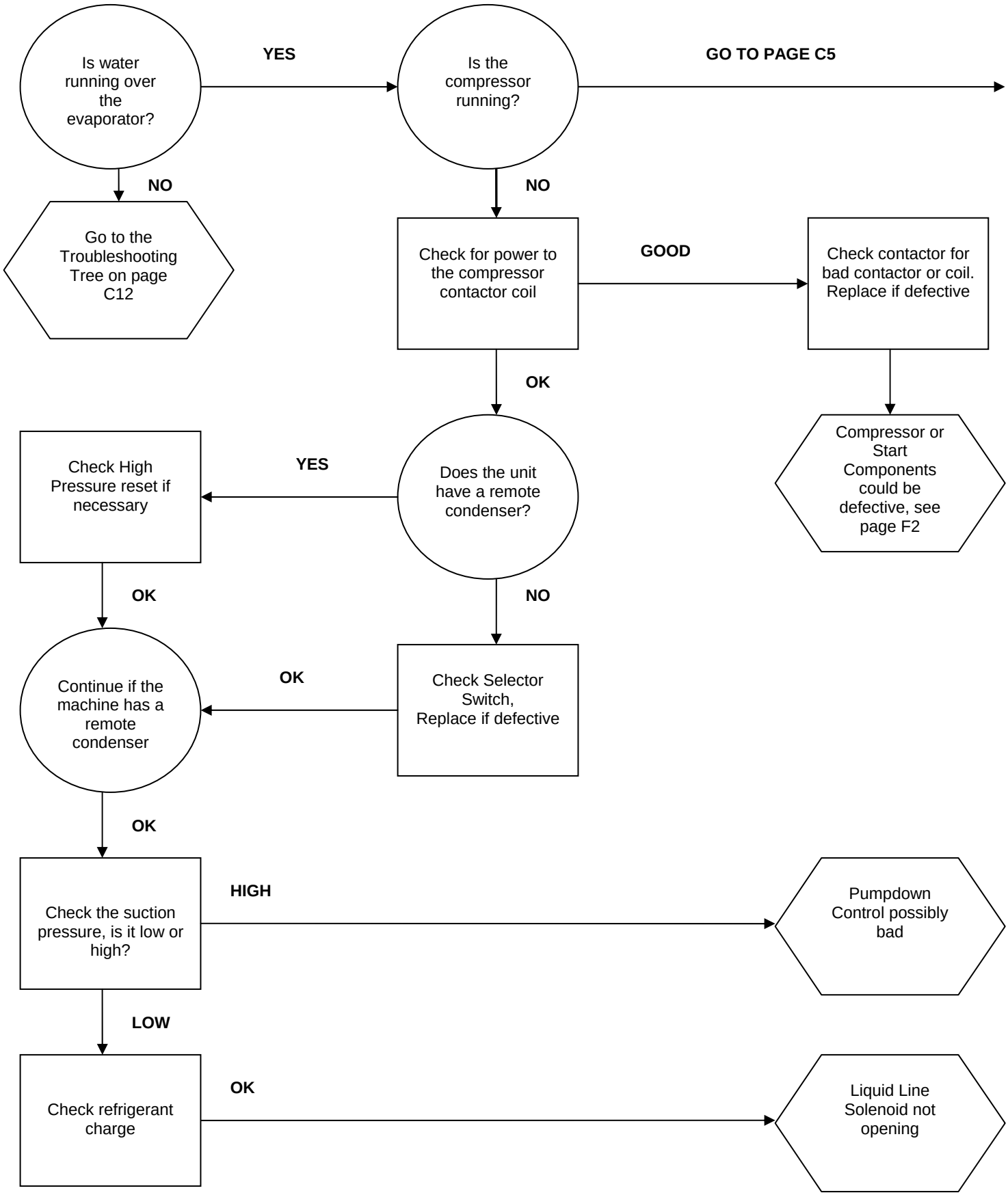

Machine Runs, Does Not Make Ice (continued)

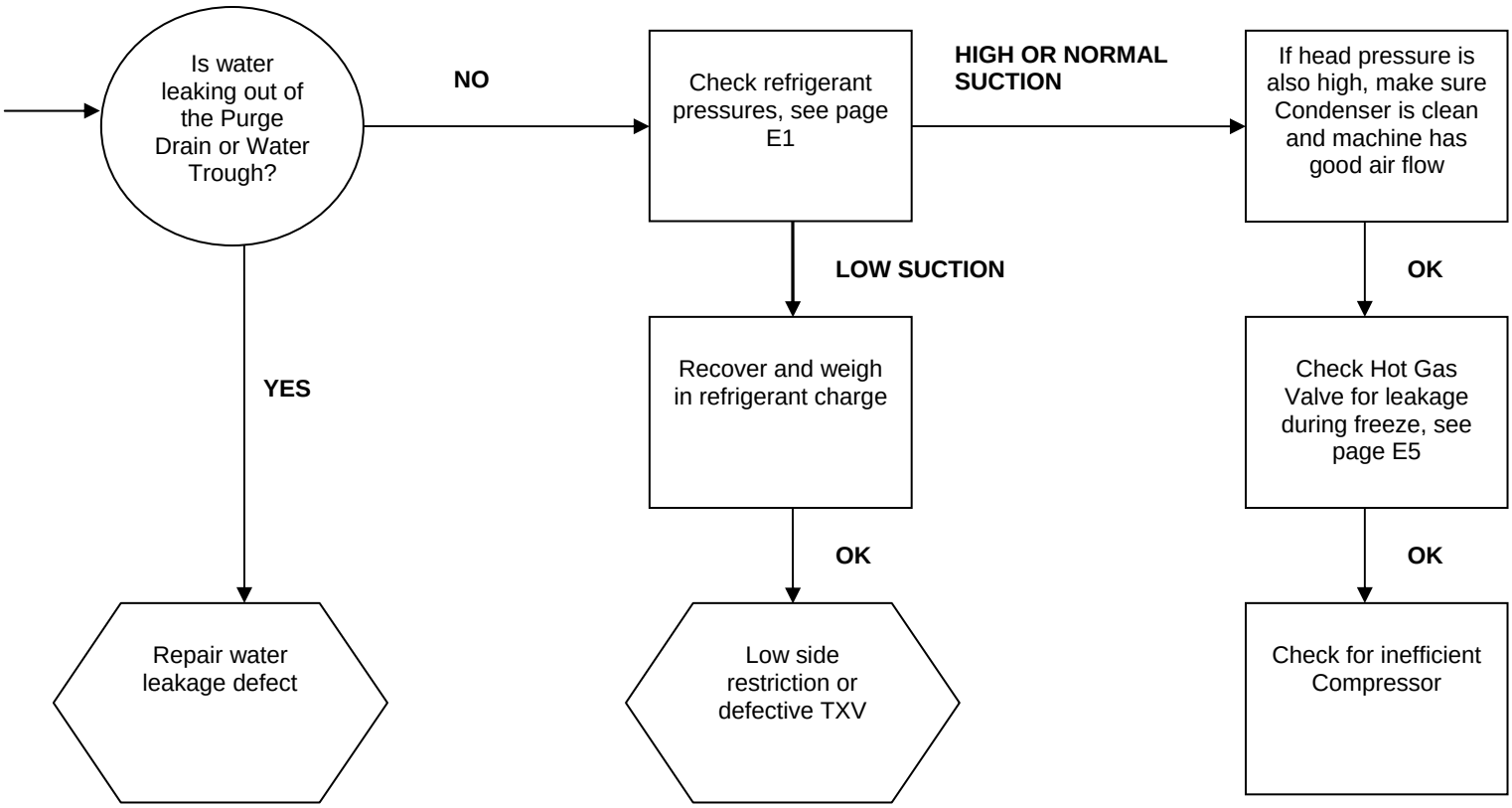

Slow Production (Cube Formation Good)

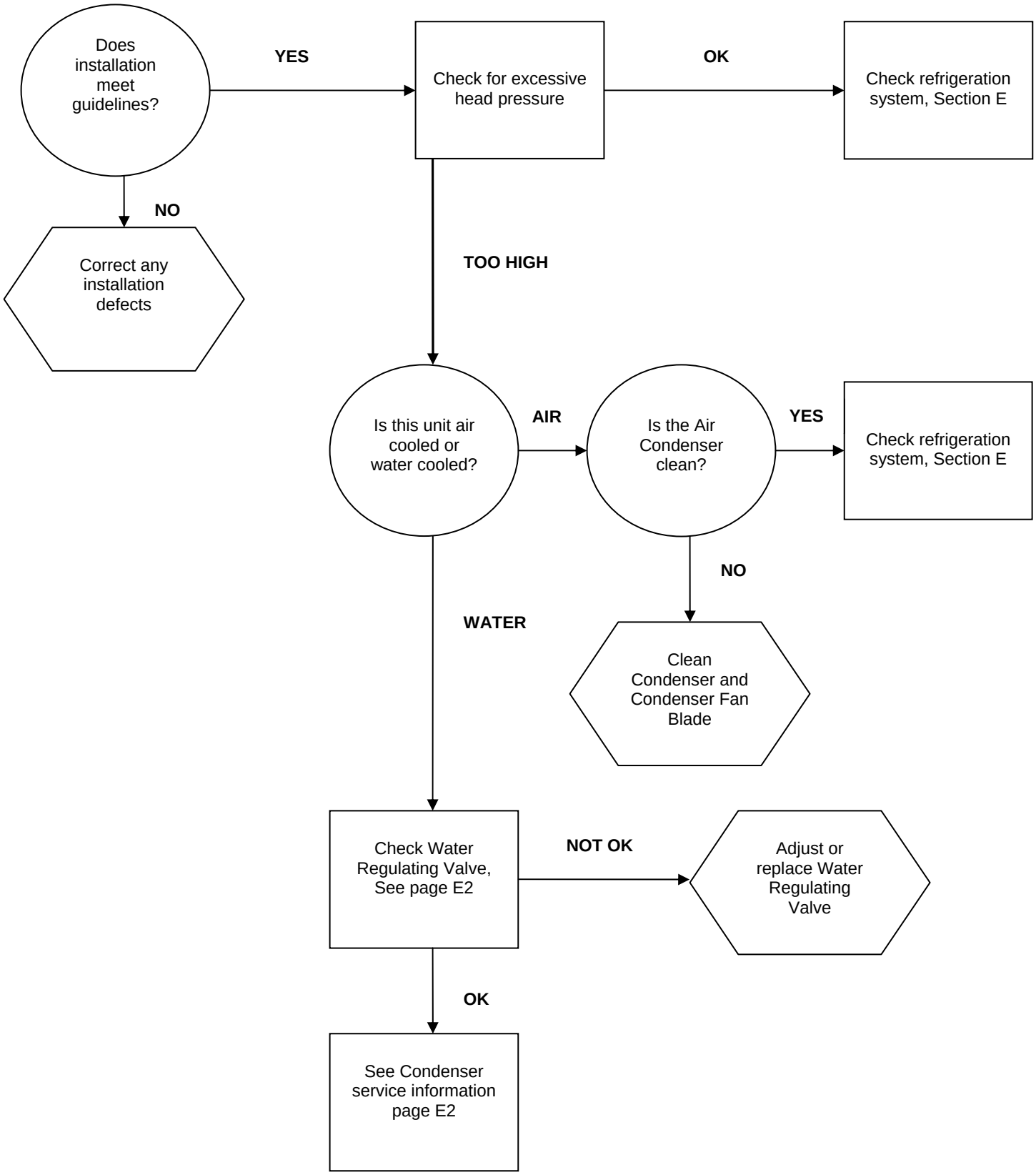

Low Suction Pressure

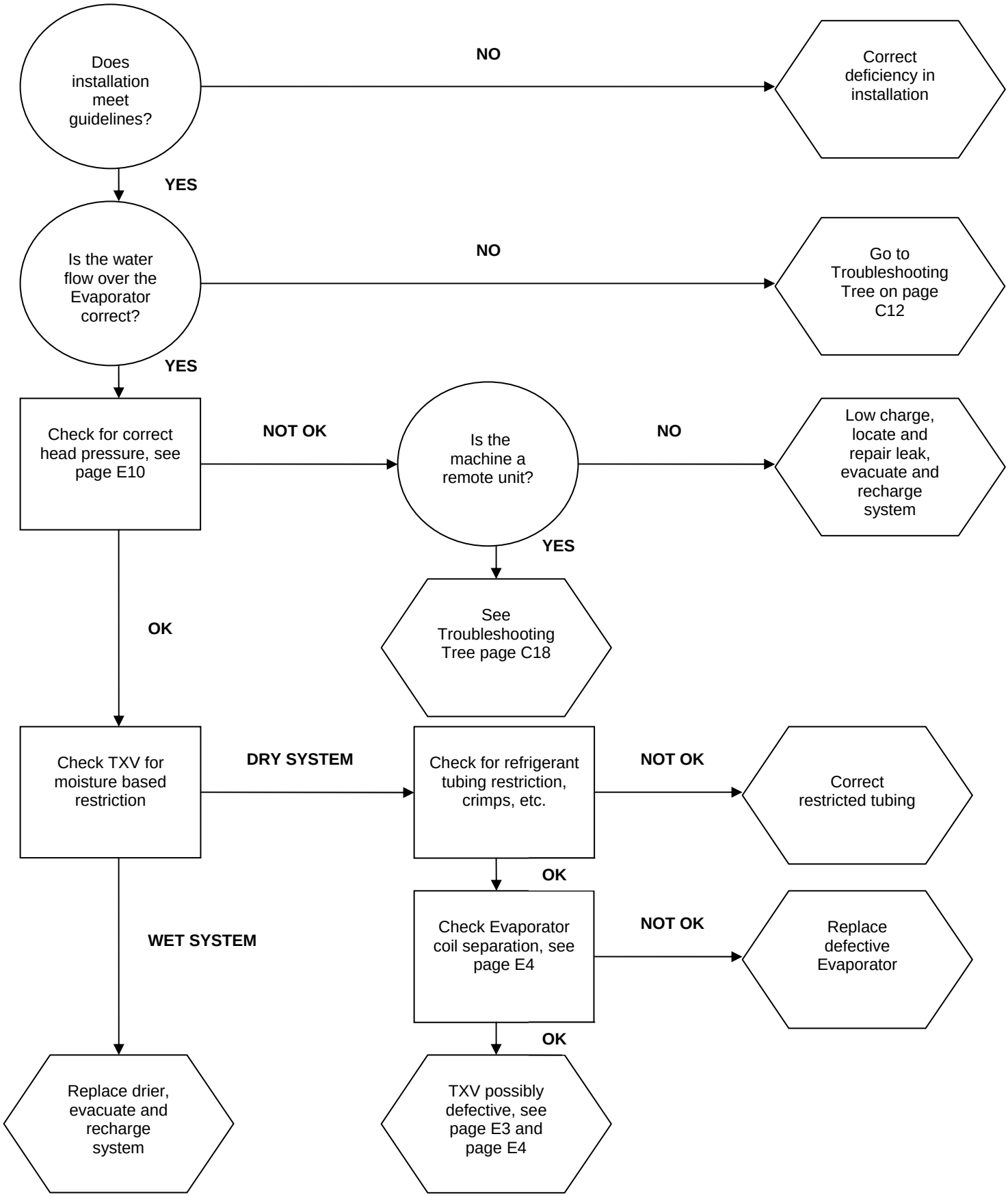

High Suction Pressure

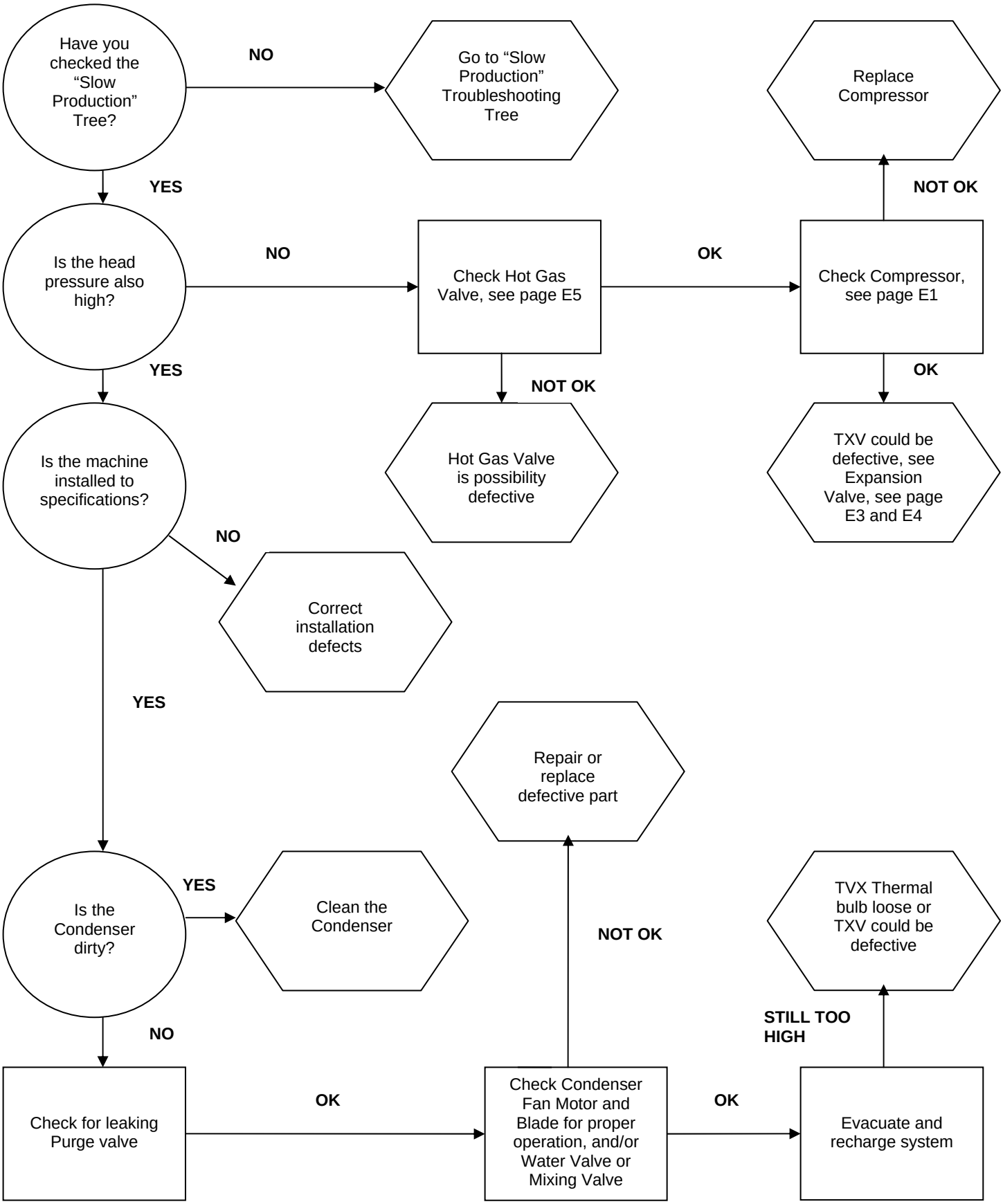

Cubes Are Hollow

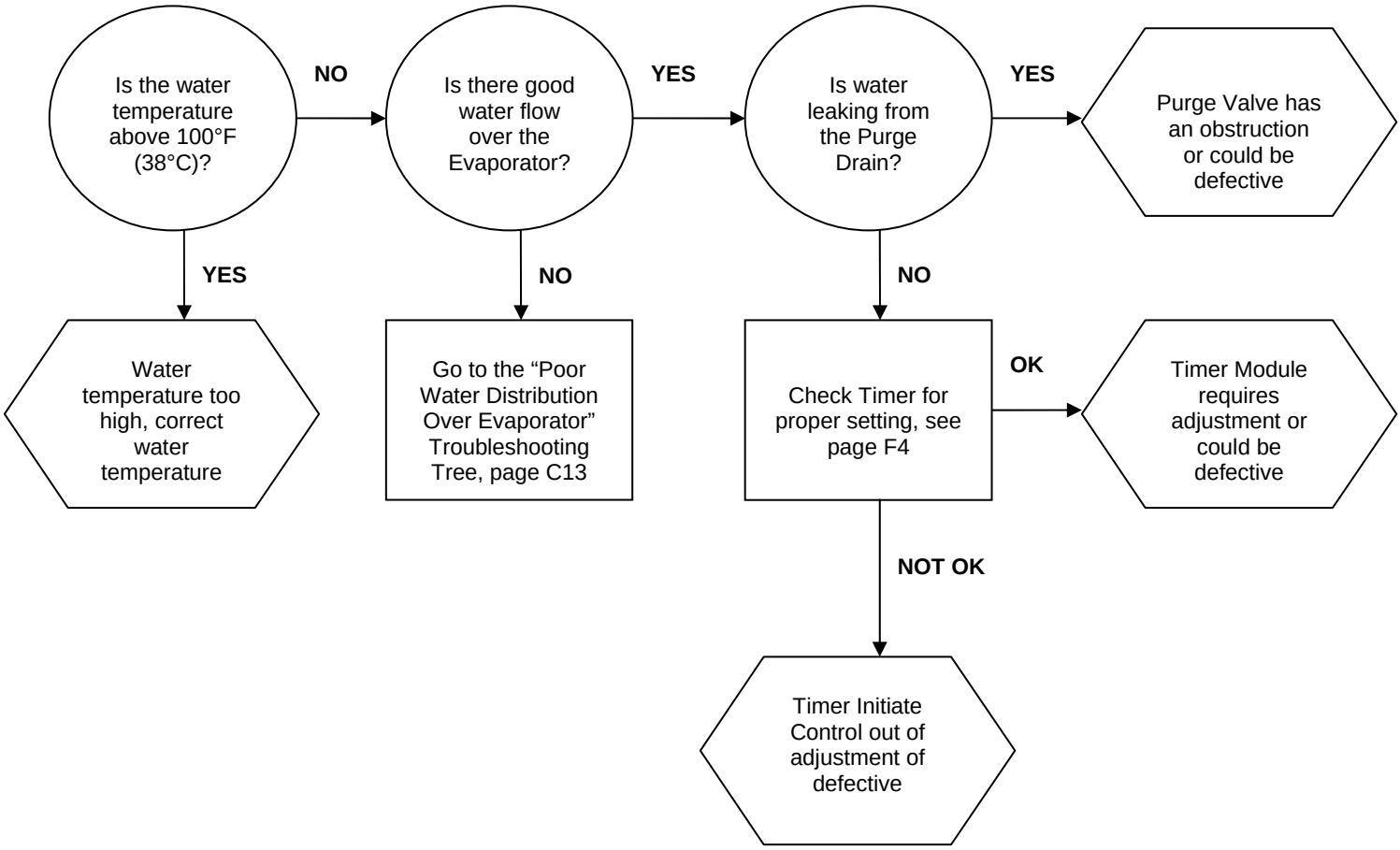

Uneven Bridge Thickness

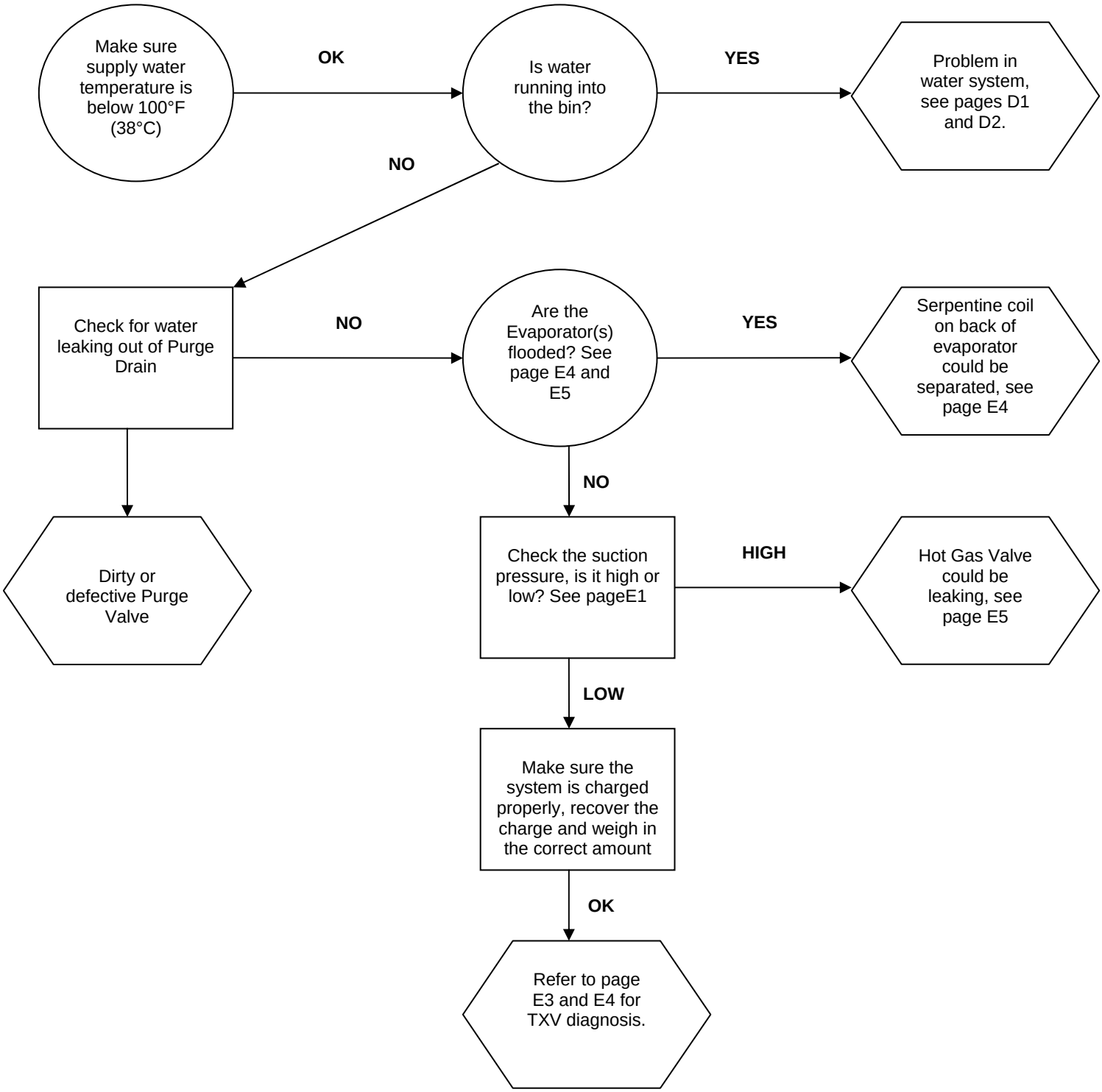

Ice bridge Thickness Varies Cycle To Cycle

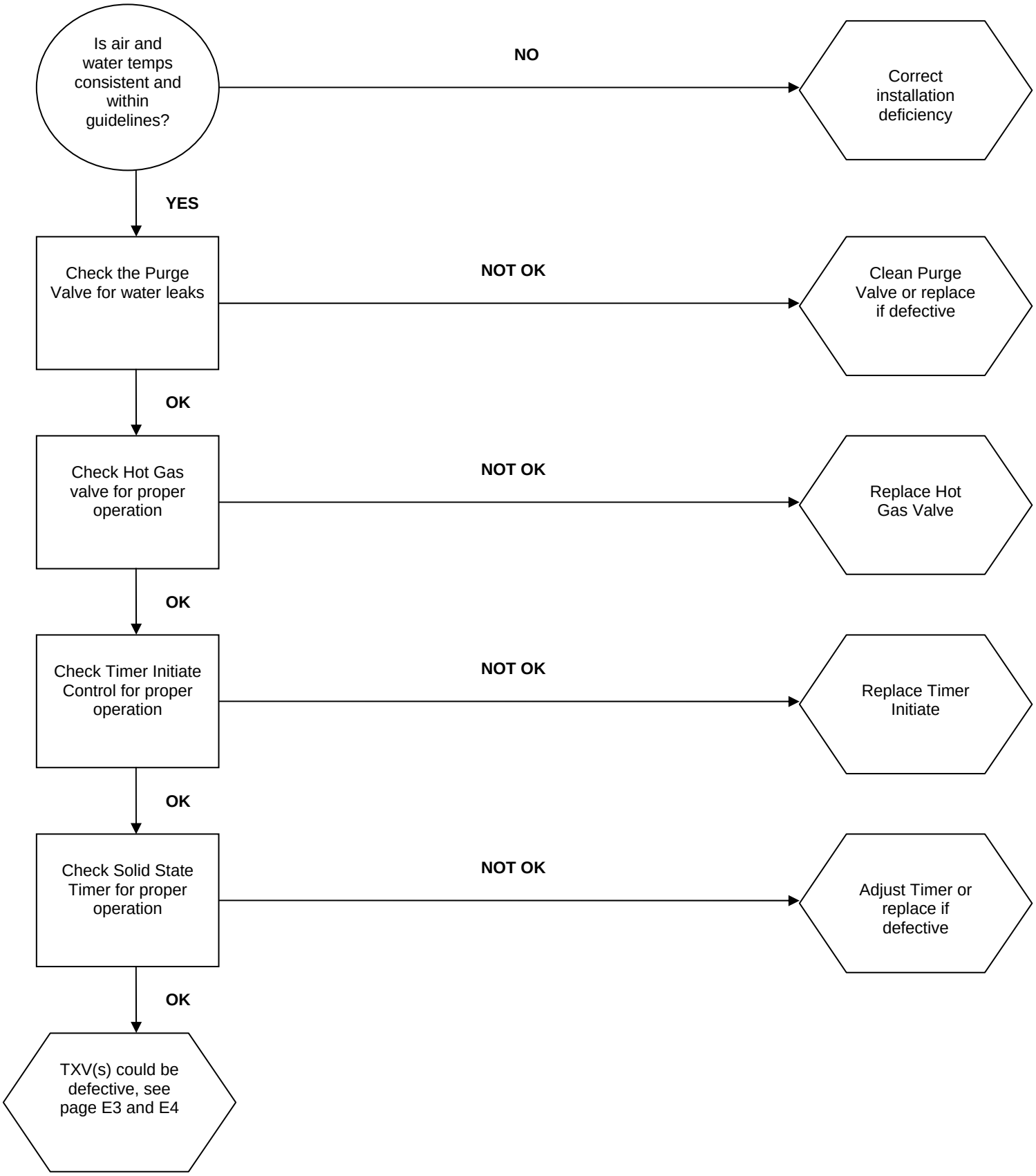

Machine Produces Cloudy Ice

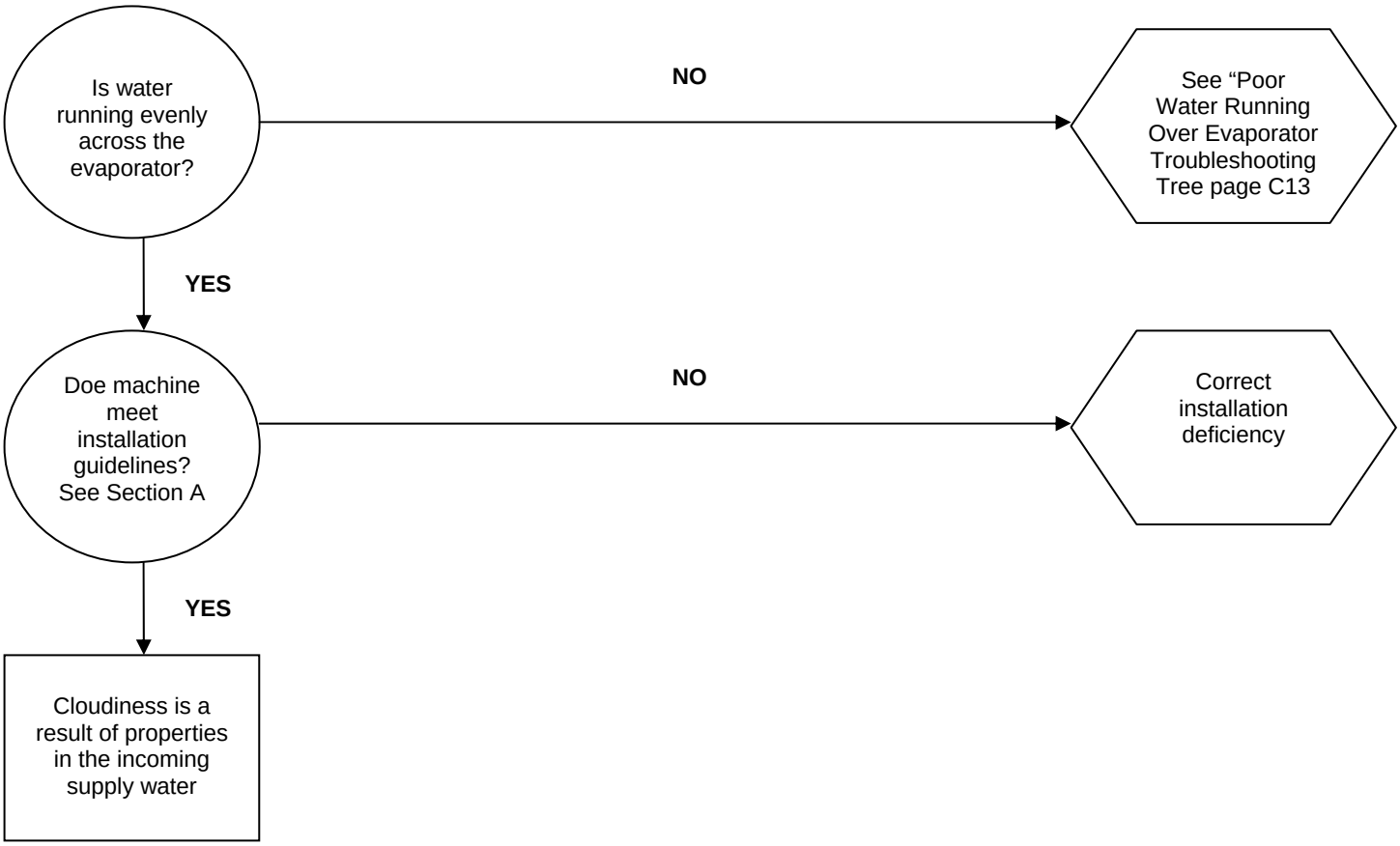

Poor Water Distribution Over The Evaporator

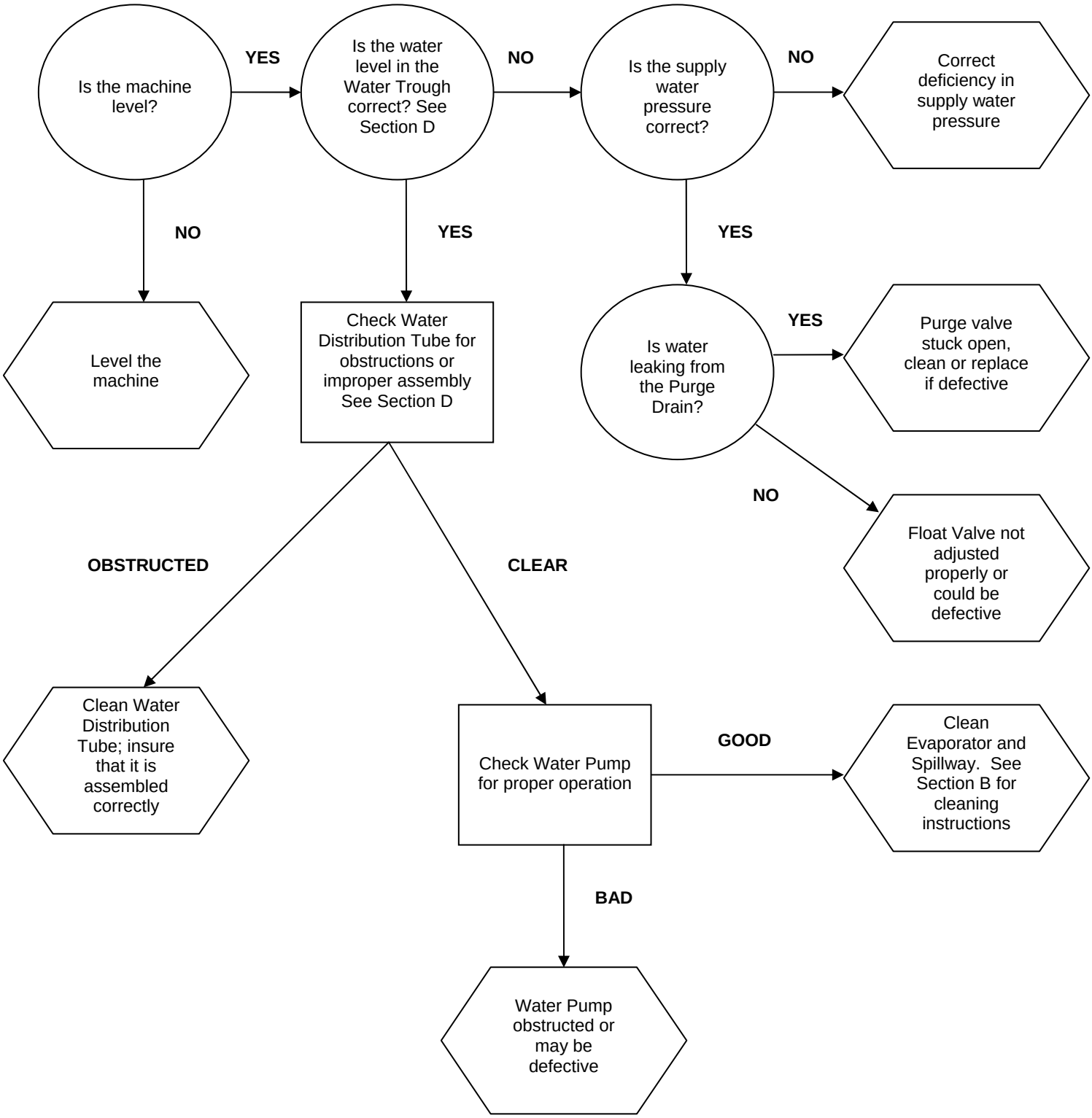

Machine Does Not Enter Harvest

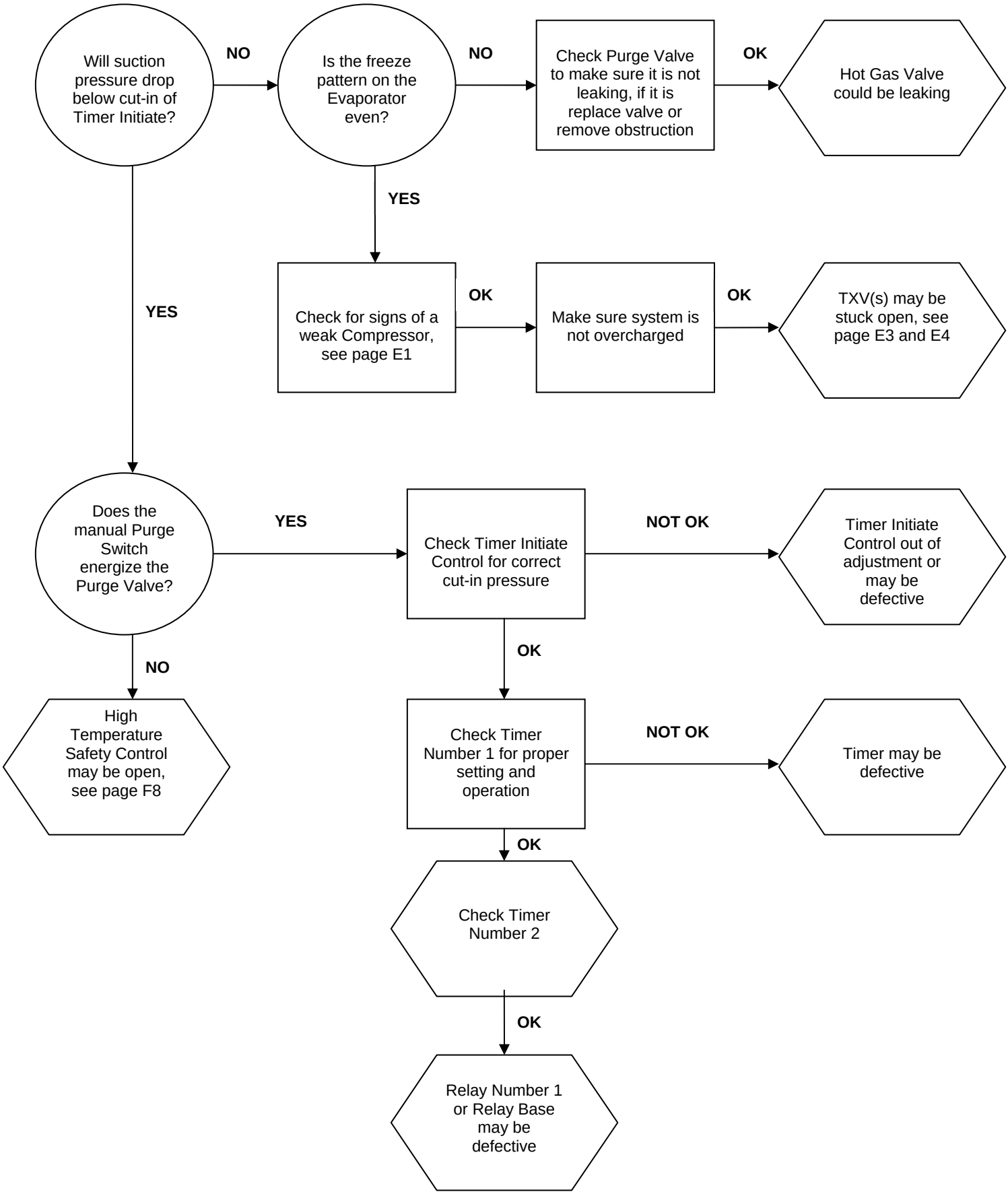

Machine Enters Harvest, Then Returns To Freeze Prematurely

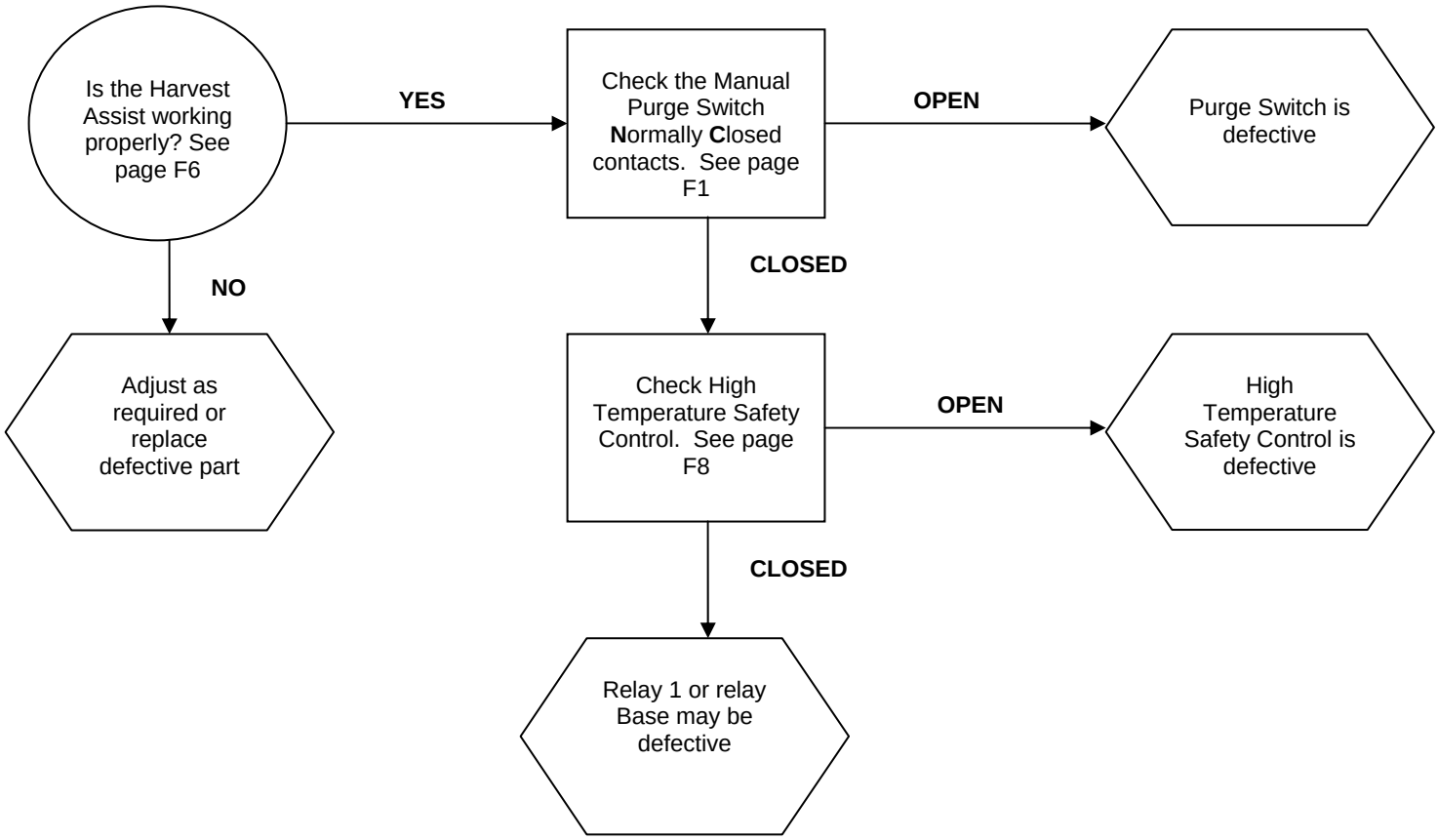

Length Of Harvest Excessive

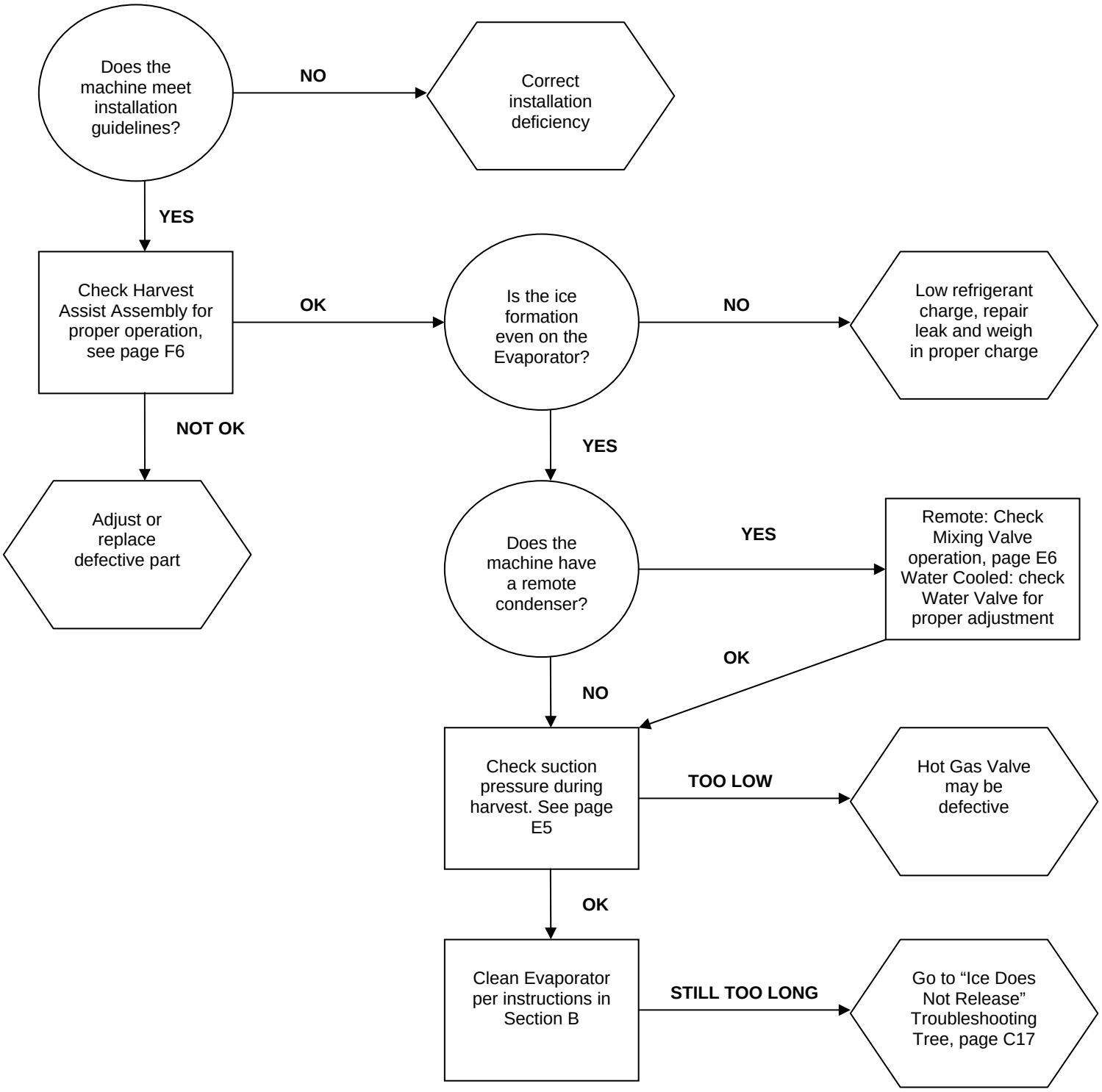

Ice Does Not Release From Evaporator

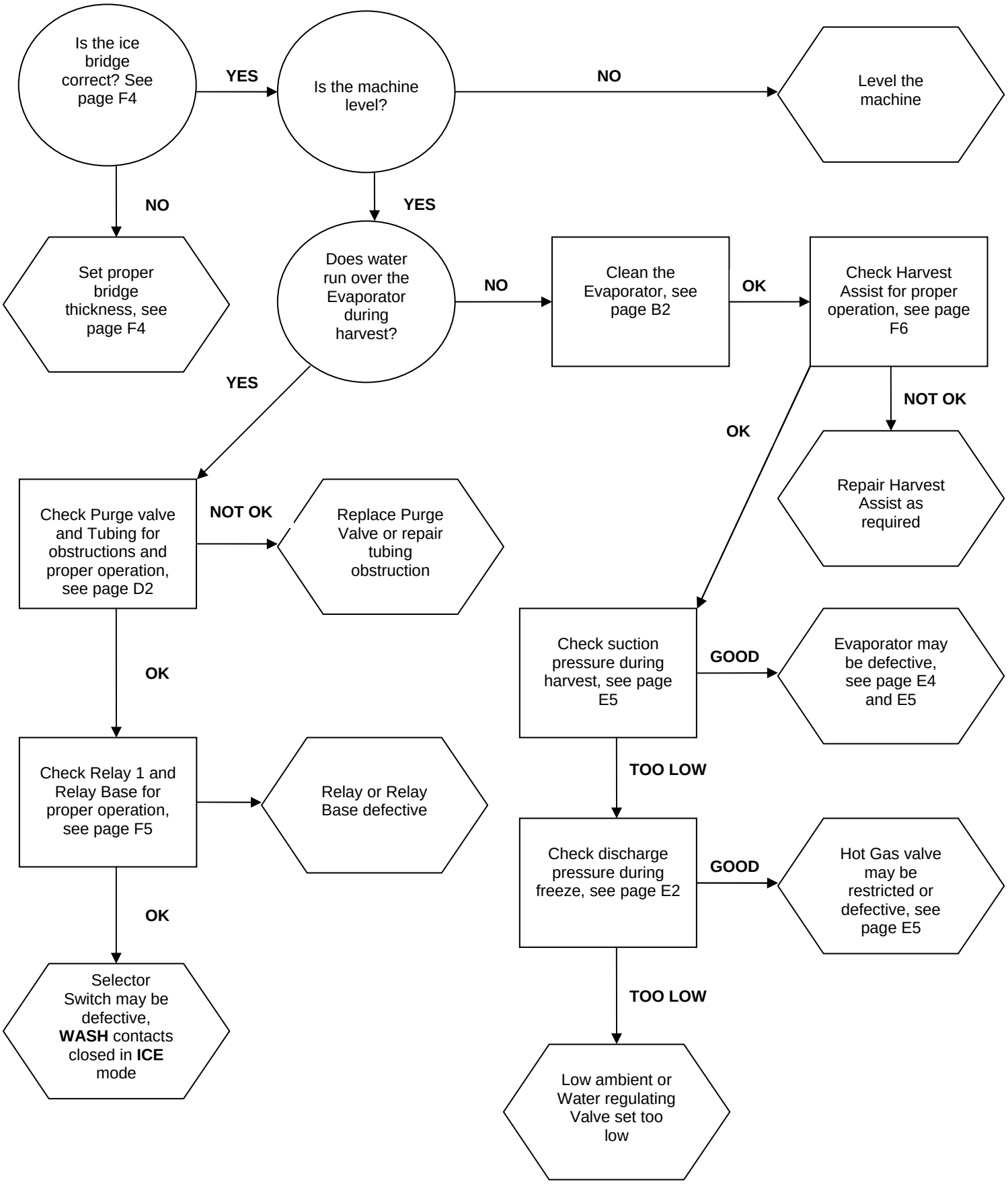

Hot Evaporator, Low Suction And Discharge Pressure (Remote Only)

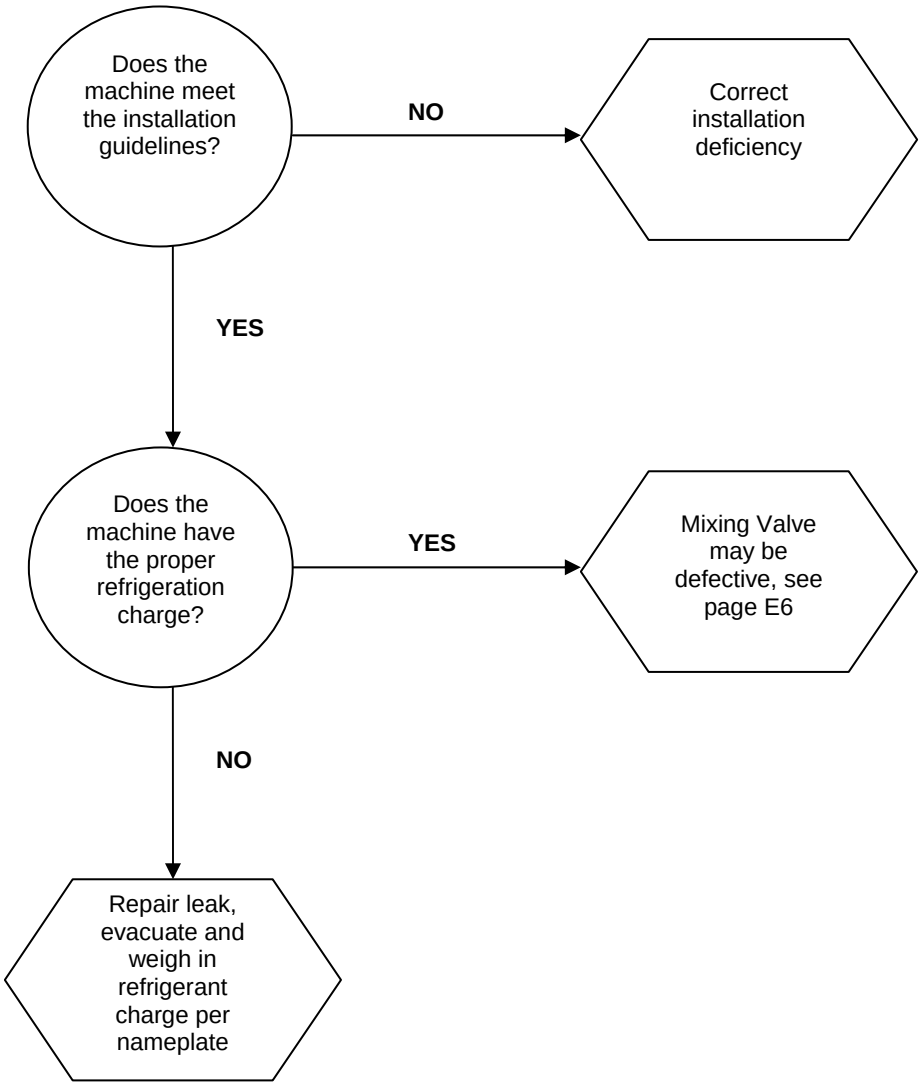

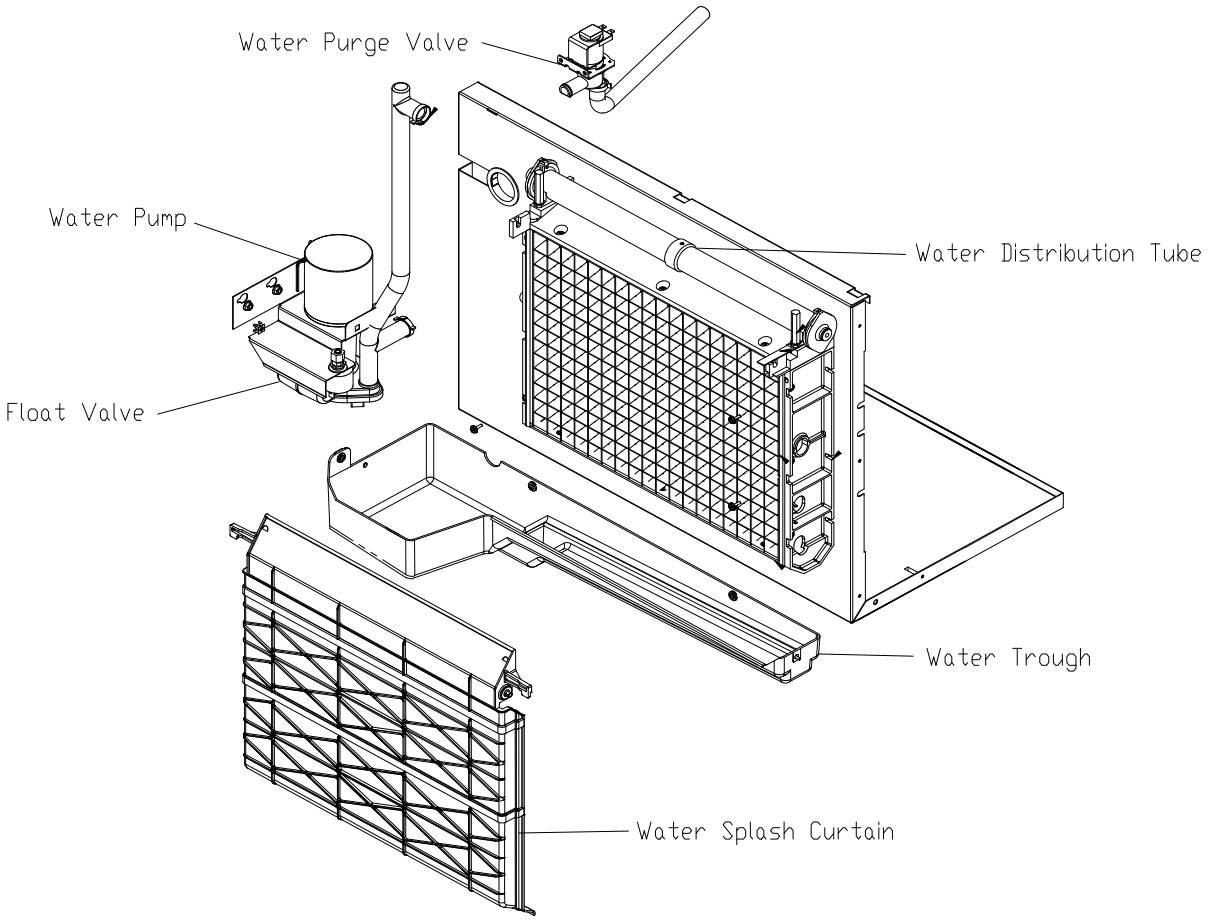

Water Distribution and Components
Water enters the machine through the **float valve** located in the **water trough**. The water trough holds water used for ice making. The float valve is used to maintain the proper water level in the water trough. During the freeze cycle water is continuously circulated over the evaporator by the **water pump**. When the machine enters harvest, the **purge valve** (not shown) opens and mineral laden water is pumped out of the water trough to the drain. After water is purged from the trough, the water pump and purge valve are de-energized and the trough refills.
Note: The operation of the Hot Gas Valve and Water Pump vary by model number, reference the wiring diagram on the specific model number for operation sequence.

Float Valve
The water level can be adjusted by carefully bending the arm of the float. The water level should be ½ inch (13mm) above the top of the water pump impeller housing during the freeze cycle.

If the float valve does not allow water into the trough or water flow is slow, the float valve may be restricted. Remove and disassemble the float valve and clean the orifice. If the water flow is still slow, check the water pressure to be sure it is at least 20 PSI (1.4 bar).

If the float valve does not stop the water flow, make sure the water pressure to the machine does not exceed 60 PSI (4.1 Bar). Install a water pressure regulator if the pressure is too high. If the water pressure is not the problem, the float plunger or the entire float valve assembly may need to be cleaned or replaced.

Water Distribution Tube

Water is pumped to a distribution tube located at the top of the evaporator and is used to distribute water evenly over the evaporator. The distribution tube can be removed and dissembled for cleaning if the hole becomes plugged or if there is excessive mineral build-up in the water system. The water distribution tube is a tube within a tube. Water enters and fills the inner tube and exits through a series of holes along the top of the inner tube. Water then fills the outer tube and exits through a series of holes along the bottom of the outer tube. For proper water flow over the evaporator, it is important that the tube be assembled correctly after cleaning. The tube can be checked for proper assembly by checking the “bump” on the flanges at the tube ends, the “bump” should be at the top.

Water Distribution Disassembly

Remove 2 screws holding the distribution tube to the evaporator spillway. Remove the clamp holding the water tube to the distribution tube. Twist the end caps of the distribution tube counterclockwise and pull to remove the inner tube halves from the outer tube. To reassemble, push the inner tube halves into the outer tube with the holes facing the same direction. Make sure the inner tube halves seat together completely. Twist the end caps clockwise ½ turn to lock the inner tubes in place. The holes in the tubes will now be facing in the opposite directions.

Important! For proper water flow over the evaporator, the inner tube holes must face up.

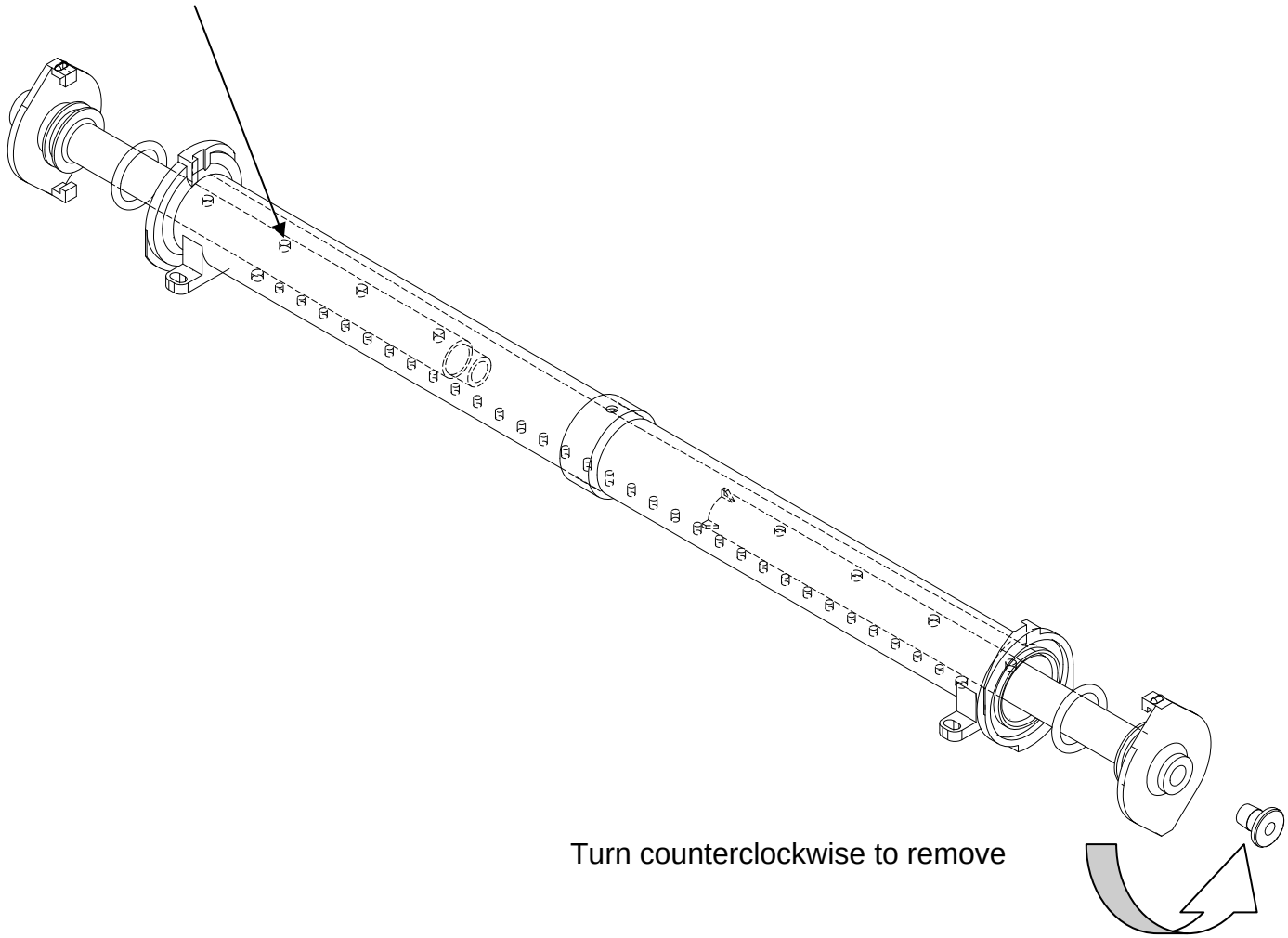

Water Splash Curtain

The water splash curtain covers the evaporator to prevent water from splashing into the bin and is also used to actuate the bin switch. When the bin becomes full of ice, the splash curtain is held open when the ice drops off of the evaporator. The actuator tab or wire bale on the splash curtain will release pressure on the bin switch and the machine shuts off. See bin control on page **F9**.

On single evaporator units, and the ICE1506R3 and 1506R4, the splash curtain can be opened or removed during the freeze cycle and the machine will continue to run until the ice drops from the evaporator. On dual evaporator units, if the curtain is opened or removed during the untimed freeze cycle, or during defrost, the machine will shut down. If the curtain is opened or removed during the timed freeze cycle, the unit will continue to operate.

The splash curtain can be removed by swinging the bottom of the curtain away from the evaporator and lifting the right side of the curtain up and out of the hinge pin slot. To reinstall the curtain, position the left side pin into the slot first, then insert the right hand side with the actuator tab of the curtain behind the bin switch.

Note: The ICE0250 and ICE0305 utilize a curtain-retaining clip. The **ICE Undercounter Series** ice machines **<u>do not</u>** utilize a splash curtain.

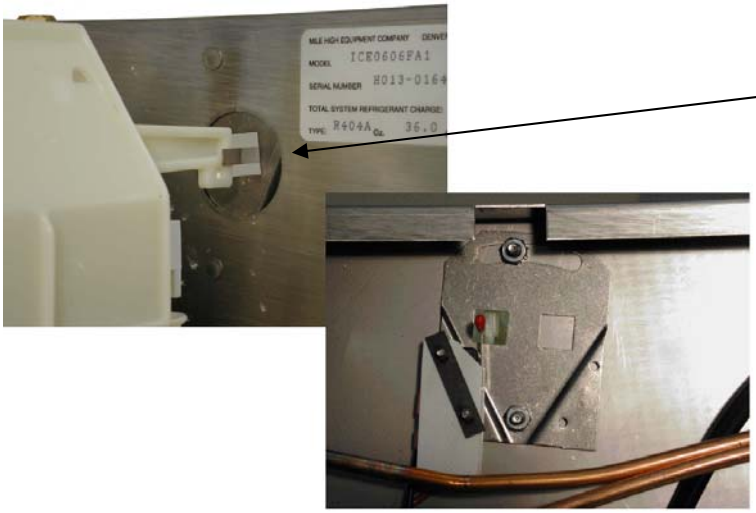

Water splash curtain actuator tab positioned behind bin switch

Proper position of wire bale switch actuator (Early 48 inch units)

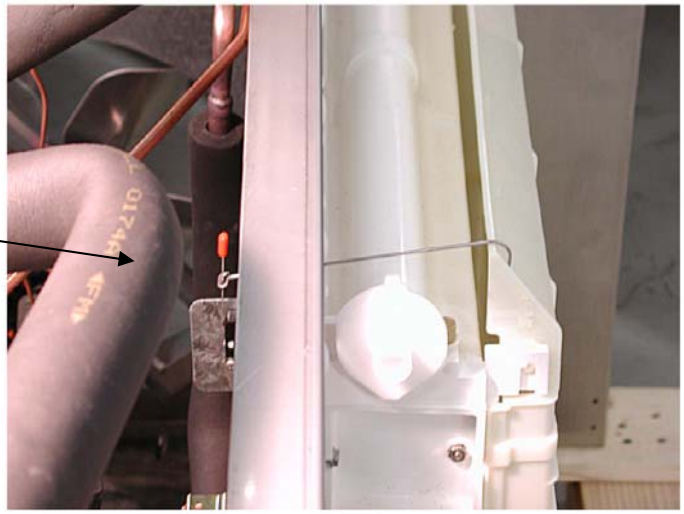

Water Purge Valve

When the machine enters the harvest cycle, the water pump continues to run and the purge valve opens. This allows mineral laden water to be pumped from the water trough to the drain. This helps keep the water system clean. The water pump and purge valve de-energizes once the water is flushed from the water trough. The cam switch controls the length of time that the water pump and purge valve remains energized see page **F7**. The purge valve can also be energized manually by pushing the purge switch. The purge switch is used when cleaning the water system to flush cleaning solution down the drain. See page **B1** for cleaning instructions.

The purge valve must be completely closed during the freeze cycle. If water leaks through the purge valve during the freeze cycle, the freeze cycle will be extended due to the float allowing warm water into the trough and poor ice formation will result. The purge valve may be defective or need cleaning.

The purge valve can be disassembled for cleaning by:

1. Disconnect electrical power from the ice machine.
2. Locate the Purge valve in the machine.
3. Leave the coil wires attached to the coil and lift coil from the valve body. (Note coil orientation)
4. Rotate the enclosing tube ¼ turn counterclockwise to remove.
5. Remove the enclosing tube, plunger and diaphragm from the valve body
6. Reverse procedure to reassemble.

The purge valve can be easily cleaned without removing the entire valve body. Dirty or clogged purge valves are not considered a warranty repair.

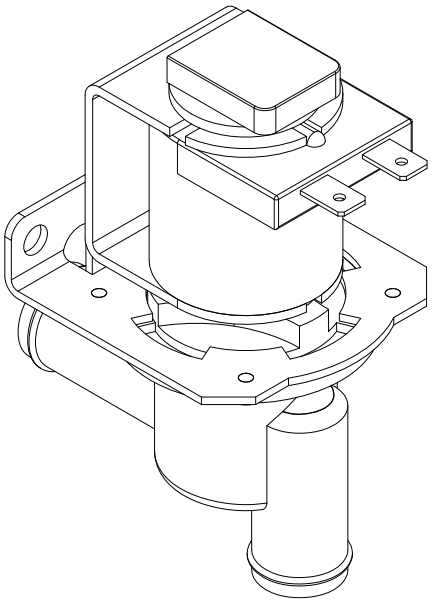

Water Trough

The water trough can be easily removed by the following procedures:

1. Disconnect power to the ice machine.
2. Shut the water supply off to the ice machine.
3. Remove water splash curtains when applicable.
4. Remove water trough mounting screws.
5. Carefully remove water trough from the ice machine.
6. Reverse procedure to reassemble.

ICEU150/200 Models

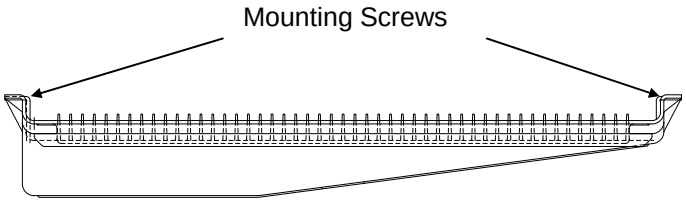

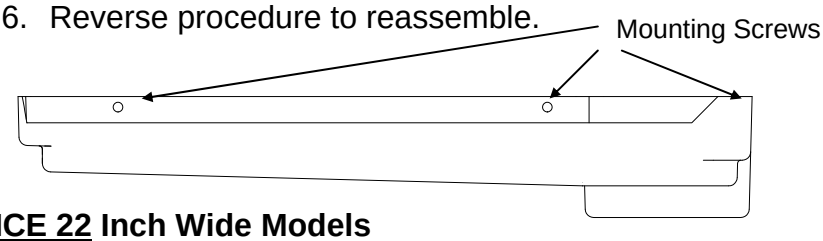

ICE 22 Inch Wide Models

ICE 30 Inch Wide Models

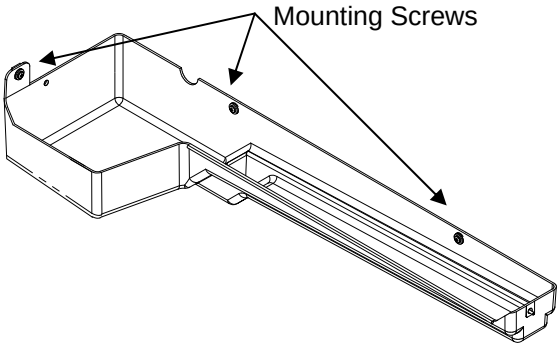

ICE 48 Inch Wide Models

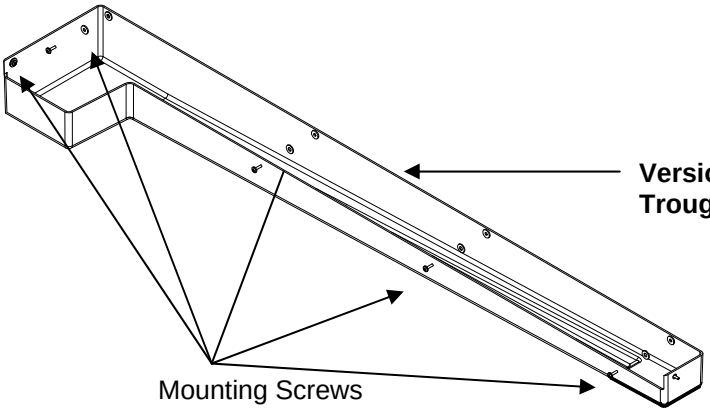

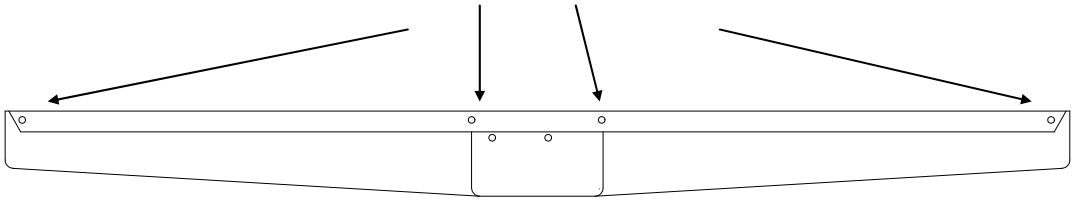

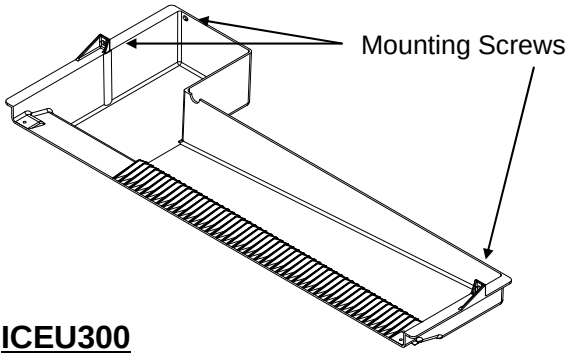

ICEU300

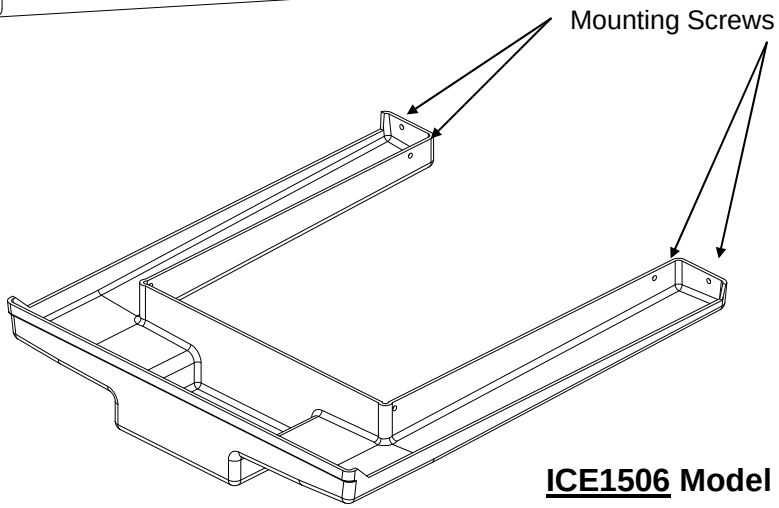

ICE1506 Model

Refrigerant Cycle and Components

Before diagnosing the refrigeration system, it is very important that the refrigerant charge be correct. Whenever the refrigeration system has been opened, the filter-drier must be replaced and the proper refrigerant charge must be weighed in. See refrigerant charge data on pages **H1**.

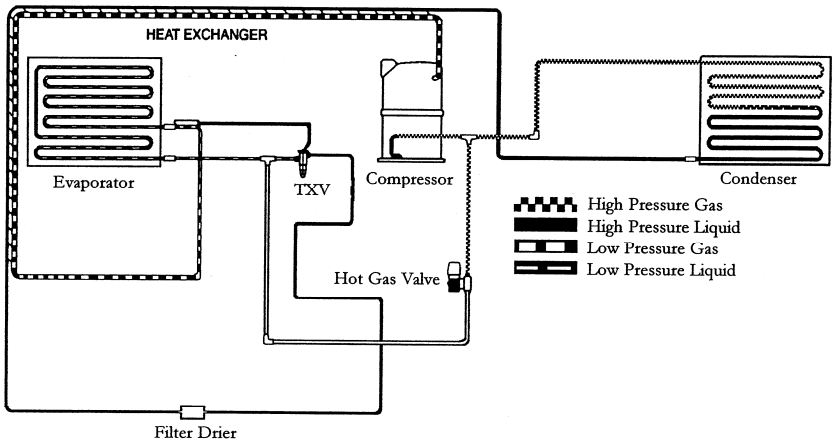

Refrigerant Pressures

The suction pressure at the beginning of the freeze cycle can vary +/- 10 psi (.7 bar) depending on operating conditions. Reference Chart on pages **I1**. Pressures less than this may indicate an undercharge. The discharge pressure on water-cooled units should be 250 psi (17.01 bar) for R404a units and 150 psi (10.21 bar) for R134a units. The discharge pressure on air cooled units will vary with ambient conditions but will typically run higher than water cooled units. Remote condensers located in ambient temperatures below 70°F (21°C) will typically run a lower discharge pressure. See **Mixing Valve** later in this section.

Refrigerant in a gas state is pumped throughout the refrigeration system by a hermetic **compressor** to the **condenser**. Heat is removed from the refrigerant either by forced air movement through an air-cooled condenser or transferring heat from the refrigerant to water through a water-cooled condenser. The refrigerant changes to a liquid when cooled.

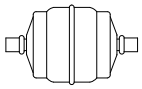

The refrigerant in a liquid state passes through a **filter drier**. The filter drier traps small amounts of moisture and foreign particles from the system. The filter drier **must be** replaced whenever the refrigeration system is opened or if the refrigerant charge has been completely lost.

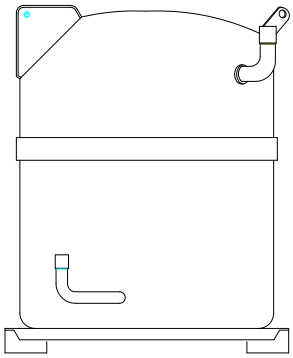

Compressor

The compressor runs during the entire cycle. If the valves in the compressor are damaged, the compressor will be unable to pump refrigerant efficiently. Damaged valves are usually the result of another problem in the refrigeration system such as liquid refrigerant returning to the compressor, oil slugging or high head pressure. When a compressor is replaced it is important that the refrigerant charge be weighed in and the system checked for proper operation to prevent a repeat failure.

An inefficient compressor will usually have a higher than normal suction pressure at the end of the cycle. The freeze cycle will be longer than normal and/or the harvest cycle may be excessively long. Check the compressor amperage draw 5 minutes into the freeze cycle. If the compressor amp draw (Reference data plate on ice machine back panel) is less than 70% of rated full load amps, the compressor <u>may be</u> inefficient. These symptoms may also be caused by other problems, therefore it is important to use the troubleshooting trees when diagnosing a problem. See Electrical System for more information on the compressor and compressor start components.

Air Cooled Condenser (Self Contained)

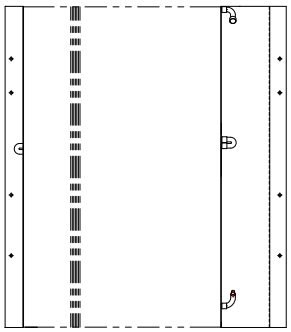

The air condenser is located in the back of the cabinet. Air is pulled through the condenser by a fan motor and discharged through the right hand side panel. The **ICE1400** has 2 fan motors and discharges through the right side and left side panels. The **ICE Undercounter** air intake and discharge is through the front panel. A top air discharge is available on the ICE250-ICE0606. The Fan Control closes at 250 psi and opens at 200 psi.

Do not block airflow as it will cause premature failure of the machine and will void the warranty.

Water Cooled Condenser

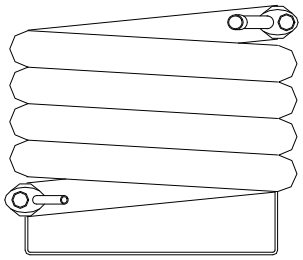

If the machine has been properly installed, the water flow through the condenser will be in a direction opposite the refrigerant flow. The water condenser supply pressure must be between 20 psi (1.4 bar) and 60 psi (4.1 bar). A water-regulating valve is used to control the flow of water into the condenser. In areas that have poor water quality, the condenser may eventually become coated with mineral deposits. This will decrease the efficiency of the condenser resulting in high head pressure. Water cooled condensers replaced due to excessive mineral build up or freezing will not be covered under warranty.

Water Regulating Valve

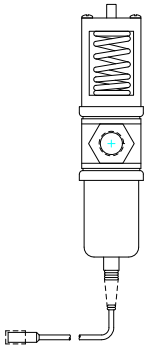

The water-regulating valve controls the head pressure by regulating the amount of water flow through the condenser. The bellows of the regulating valve are connected to the high-pressure side of the refrigeration system. As the head pressure rises, the bellows expand increasing the water flow through the water condenser. Adjusting the spring pressure screw on top of the water valve can vary the rate of water flow. The valve should be adjusted to maintain a discharge pressure of 250 psi (17.01 bar) on R404a units and 150 psi (10.21 bar) on R134a units. Water exiting the condenser should be between 100°F (38°C) and 110°F (43°C). When the machine is off, the water valve will close completely, stopping the flow of water through the condenser. If the water flow does not stop when the machine is off, the valve may need cleaning or replaced.

Air Cooled Condenser (Remote) See Pages **E5** and **E7**

High Pressure Safety Control (Manual Reset)

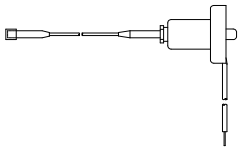

If the discharge pressure becomes excessive, the high-pressure safety control will open and shut the machine off. The high-pressure safety control opens at 450 psi (30.62 bar) on R404a units and 250 psi (17.01 bar) on R134a units. The high-pressure safety control is used on all water-cooled and remote units and select air-cooled units.

High Pressure Safety Control (Automatic Reset)

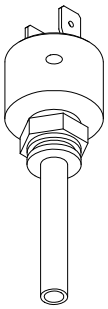

The automatic reset high pressure control opens at 450 psi (30.62 bars) and closes at 338 psi (23.00 bars). The high-pressure safety control is used on all water-cooled and remote units and select air-cooled units.

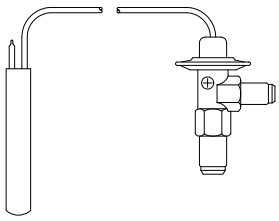

Thermostatic Expansion Valve (TXV)

The thermostatic expansion valve meters the flow of refrigerant into the evaporator changing its state from a high-pressure liquid to a low-pressure liquid. This drop in pressure causes the refrigerant to cool. The cooled refrigerant absorbs heat from the water circulating over the evaporator. As the evaporator fills with liquid refrigerant, the evaporator becomes colder.

The flow of refrigerant into the evaporator is controlled by the temperature at the outlet of the evaporator. The expansion valve bulb, mounted to the top of the suction line, senses the evaporator outlet temperature causing the expansion valve to open or close. As ice forms on the evaporator, the temperature drops and the flow of refrigerant into the evaporator decreases, resulting in a drop in suction pressure.

The evaporator should become completely flooded (filled with liquid refrigerant) during the freeze cycle. A completely flooded evaporator will have a uniform freeze pattern (ice formation across the evaporator). A starved evaporator (not enough liquid refrigerant) will have poor or no ice formation at the top of the evaporator, and the tube(s) exiting the evaporator will not frost. All tubes should be within 10 degrees of each other and frosted approximately 5 minutes from the start of the freeze cycle.

An expansion valve that is restricted or not opening properly will starve the evaporator resulting in lower than normal suction pressure. A low refrigerant charge will also starve the evaporator and cause low suction and discharge pressures. If not sure of the amount of charge in the system, the refrigerant should be recovered and the correct charge be weighed in before a defective valve can be diagnosed.

If the evaporator is starved but the suction pressure is higher than normal, the TXV is not the problem; refer to the troubleshooting tree in section C. If the TXV sticks open or if the thermal bulb is not making good contact with the suction line, the flow of refrigerant into the evaporator will be too great and liquid refrigerant will flood the compressor. The suction pressure will remain higher than normal and the machine will remain in an extended freeze cycle. Ice will build evenly but will be very thick.

Symptom	Problem	Possible Remedy
Evaporator flooded but suction pressure not dropping. Compressor has been checked and appears to be good. Suction line at compressor may be colder than normal	1 TXV thermal bulb not making good contact with suction line or uninsulated	1 Tighten bulb clamp and insulate bulb.
	2 TXV bulb installed incorrect	2 Locate bulb on top of suction line
	3 System overcharged	3 Recharge system
	4 TXV stuck open	4 Replace TXV
Evaporator starved, no frost on line(s) exiting evaporator. Suction pressure is low. See Evap. Diagram Pg.**E4**	1 Machine low on charge	1 Recover refrigerant and weigh in proper charge
	2 TXV restricted or stuck closed	2 Replace TXV and drier

Continued Page E4

Thermostatic Expansion Valve (Continued)
A dual evaporator machine will have one TXV for each evaporator. If one TXV sticks open and the other is operating normally, the suction pressure will be higher than normal and both evaporators will build thick ice. It is recommended that both valves be replace if one sticks open.

If one TXV sticks closed and one is operating normally, the suction pressure will be normal or low but the evaporator with the defective valve will be starved (thick ice at the bottom and thin ice at the top).

Evaporator
As water is circulated over the front of the evaporator, liquid refrigerant is circulated through the tubing attached to the back of the evaporator. As the liquid refrigerant in the tubing vaporizes, it absorbs heat from the water causing the water to freeze. The evaporator should be completely flooded throughout most of the freeze cycle. A flooded evaporator will build ice evenly across the evaporator. A starved evaporator will have uneven ice formation. Most problems with ice formation or harvesting are not related to a defective evaporator, use the Troubleshooting Trees in section C for additional help.

Refrigerant enters the evaporator through the bottom tube and exits through the top tube. On **(Prior to 0801)** models ICE800, 1000, 1800 and 2100 the refrigerant line at the TXV outlet splits into two feeder tubes. This split occurs at the distributor, which is a fitting that is soldered to the TXV. One feeder tube from the distributor feeds the top of the evaporator; the other tube feeds the bottom of the evaporator. The evaporator tubes run parallel, in opposite directions, along the back of the evaporator creating a dual pass.

If the evaporator is flooded but not building ice evenly, it is possible the evaporator has coil separation. Evaporator coil separation is the separation of the refrigerant tubing from the back of the evaporator plate. This is very rare but occasionally occurs.

To confirm coil separation, remove and check the back of the evaporator. If the coil is separated, the evaporator must be replaced. If the outlet(s) of the evaporator is not frosted, the problem is not with coil separation (Refer to the troubleshooting trees, section C).

ICE800, 1000, 1800 and 2100 Prior to Jan, 2008
ICE0855G, ICE0856G, ICE1006A6, ICE1006W5, ICE1006R6

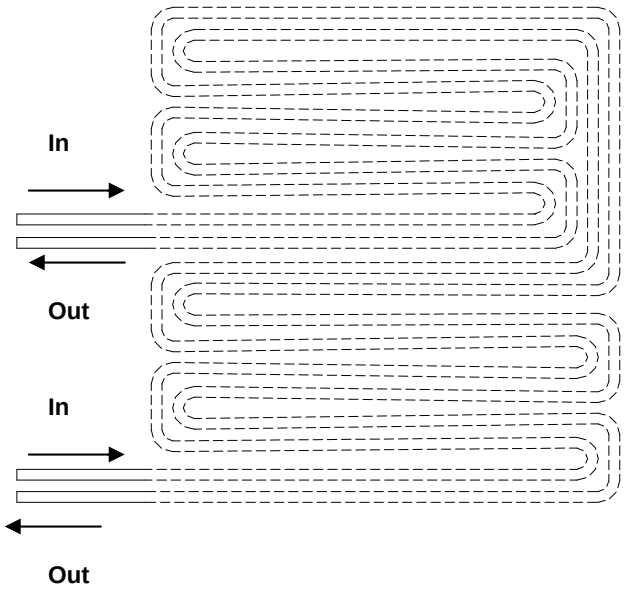

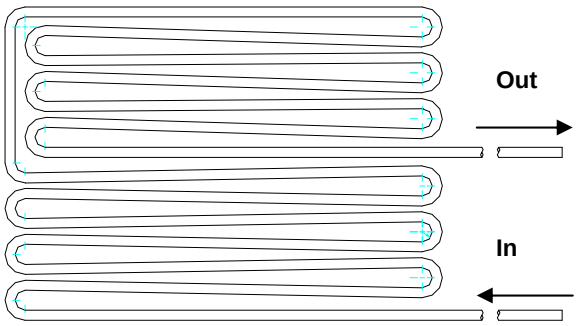

Note: Permanent discoloration of the evaporator plating is normal and will cause no problems with harvesting the ice or sanitary conditions. Before condemning the evaporator for plating problems, be certain it is not just discoloration. Good evaporators will not be covered under warranty. If the spillway (plastic evaporator top) becomes damaged, it can be replaced. It is not necessary to replace the entire evaporator.

As liquid refrigerant leaves the evaporator, it changes to a low-pressure gas before returning to the compressor. Liquid refrigerant must not return to the compressor or damage will result. Frost on the suction line at the inlet of the compressor indicates liquid returning to the compressor. Check for frost at the end of the freeze cycle. If liquid is returning to the compressor, the problem must be located and corrected. See Refrigerant Charge, Thermostatic Valve and Evaporator.

Harvest Cycle

Once the freeze cycle is complete, the machine enters the harvest cycle. The **hot gas valve** opens to allow hot discharge gas to enter the evaporator.

Hot Gas Valve

When the machine enters harvest the hot gas valve coil is energized opening the hot gas valve. Discharge gas is pumped through the hot gas valve directly into the evaporator. The evaporator temperature will reach approximately 40°F (4.5°C). The suction pressure during harvest should be a minimum of 70 psi (4.8 bar) for R404a units or 50psi (3.4 bar) for R134a units. The discharge pressure will drop during harvest.

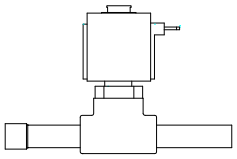

If the hot gas valve does not completely open during harvest, there will not be enough hot gas in the evaporator to defrost the ice. If there is not enough hot gas entering the evaporator, the suction pressure will be lower than the above stated pressures. It is important when making this check that the machine has the proper refrigerant charge, normal head pressure and the compressor is functioning properly. If the hot gas valve leaks during the freeze cycle, ice will not form on the top of the evaporator and suction pressure will be higher than normal. To check if the hot gas valve is leaking, let the machine run in the freeze cycle for approximately 5 minutes. Now feel the temperature between the inlet and outlet of the valve. A definite temperature difference should be felt. If the lines are the same temperature and the suction pressure is higher than normal; the valve is leaking and should be replaced. Use Troubleshooting Trees in section C.

Remote System

Machines that use remote condensers have several components that are not used in self contained machines. A **mixing valve** controls the head pressure when the ambient temperature at the condenser drops below 70°F (21°C). When the bin fills with ice or is turned off at the selector switch, the machine will pump all the refrigerant into the receiver before shutting off.

Remote Condenser

For proper operation, the remote condenser must be installed properly. Improper installation will void the warranty. See remote guidelines on page **A17**. The location of the remote condenser should be such that the ambient air temperature does not exceed 120°F (48.9°C). If ambient temperature exceeds 120°F (48.9°C) ice production will decrease until the ambient temperature decreases.

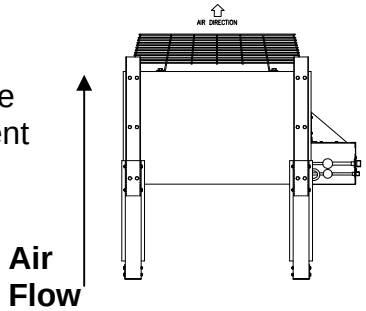

Remote Condenser (Continued)

If the airflow is restricted or the condenser is dirty, the head pressure will be excessively high, slow production will result and the compressor may overheat and eventually become damaged. The condenser coil and fan blades must be kept clean. The condenser can be cleaned with compressed air or by using a brush. If a brush is used, brush in the direction of the fins taking care not to bend the fins. If the condenser fins are bent, this will restrict the airflow through the condenser and the fins will need to be straightened with a fin comb. Problems related to a dirty condenser or poor airflow will not be covered under warranty. Note: The condenser fan motor runs continually, it will shut off when the icemaker shuts off.

Mixing Valve

When the temperature at the condenser is above 70°F (21°C), the refrigerant flow from the compressor is directed by the mixing valve through the condenser and into the receiver. When the temperature at the condenser drops below 70°F (21°C), the pressure in the bellows of the mixing valve becomes greater than the pressure of the liquid refrigerant coming from the condenser. This change allows the valve to partially restrict the flow of refrigerant leaving the condenser and allows discharge gas to by-pass the condenser and flow directly into the receiver, mixing with the liquid refrigerant from the condenser. The amount of discharge gas that bypasses the condenser increases as the ambient temperature decreases. This action of the mixing valve allows the discharge pressure to be maintained at approximately 240 psi* (16.5 bar) during low ambient conditions. If the refrigerant system is undercharged and the ambient temperature is below 70°F (21°C), the mixing valve will not work properly. The mixing valve will allow too much refrigerant to bypass the condenser.

***Note: Mixing Valve pressure varies by Ice Machine model number.**

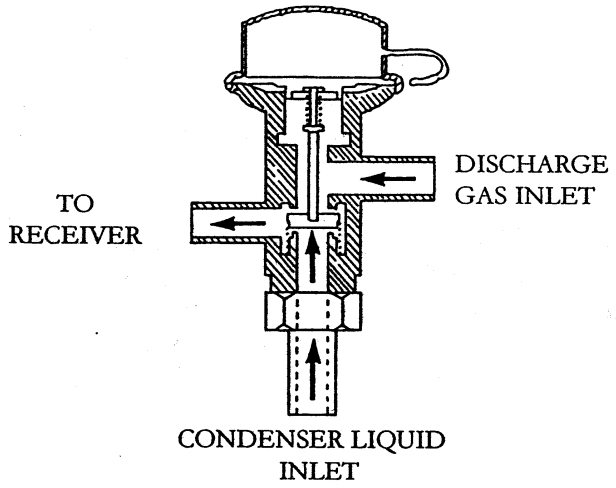

Problem	Possible Cause	Remedy
1 Head pressure low, Line between valve and receiver cold. Ambient condenser temp. below 70°F (21°C)	A. Valve Defective, not allowing discharge gas into receiver	A. Replace valve
2 Head pressure low, Line between valve and receiver hot.	A. System low on charge. B. Valve defective, not allowing liquid into receiver.	A. Leak check. Recover refrigerant and weigh in proper charge. B. Replace valve
3. Head pressure low, Line returning from condenser is cool. Ambient condenser temperature is above 70°F (21°C)	A. Valve defective not allowing refrigerant to circulate through condenser.	A. Replace valve.

Pump Down System (Remote Only)
The pump down system prevents liquid refrigerant from migrating to the evaporator and compressor during the off cycle and prevents the compressor from slugging or starting under an excessive load.

Liquid Line Solenoid
When a machine with a remote condenser shuts off, the liquid line solenoid valve, located at the outlet of the receiver, is de-energized causing the valve to close completely restricting the flow of refrigerant. The compressor will pump all of the refrigerant into the condenser and receiver.

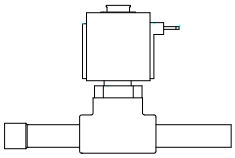

As the system pumps down, the pressure on the low side of the system drops. When the suction pressure drops to **10 psi** (**Sea Level**, .68 bar), **12.5 psi** (**5,000 Feet** .82 bar) the pump down control opens and shuts the machine off. See page **F9** for pump down control operation. Liquid refrigerant is stored in the condenser and receiver while the machine is off. It is normal for the machine to pump down once or twice an hour as the pressures equalize.

When the machine comes back on (the bin switch closes or the selector switch placed to the ICE position), the liquid line solenoid valve opens and the refrigerant is released from the receiver. When the suction pressure rises to **35 psi** (**Sea Level**, 2.38 bar) **37.5** (**5,000 Feet** 2.59 bar) the pump down control closes and the machine comes back on. If the machine will not pump down, the valve may not be closing all the way. A weak compressor will also prevent the machine from pumping down. Check for signs of a weak compressor before replacing the liquid line solenoid. Prior to replacing the valve, disassemble and check for obstructions that may not allow the valve to seat.

Receiver
If the system has a remote condenser, the refrigerant will enter a receiver before passing through the filter drier. The receiver holds reserve liquid refrigerant during the freeze cycle. The receiver also stores liquid refrigerant during the off cycle.

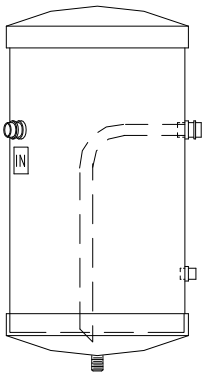

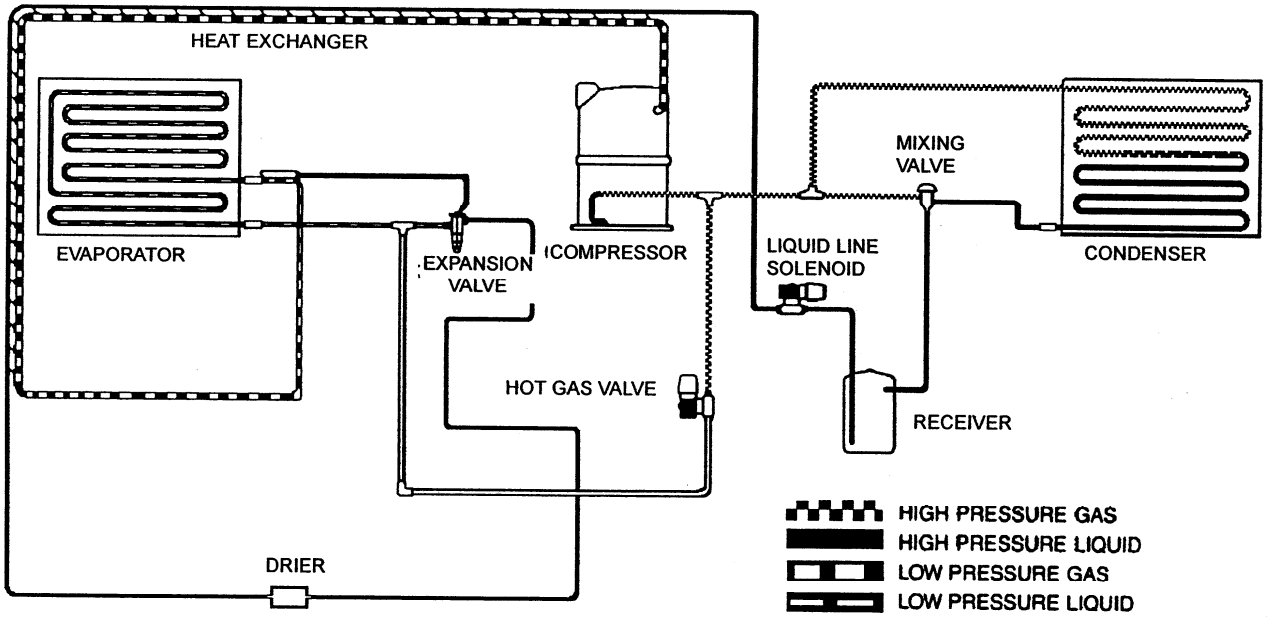

Refrigerant
Refrigerant in a high-pressure liquid form is fed to an expansion valve where the refrigerant is reduced to a low-pressure liquid. Under this low pressure, the liquid will absorb heat from the evaporator causing the liquid to change to a vapor. This vapor is the drawn into the compressor where the temperature and pressure of the vapor are increased. The high temperature, high pressure vapor flows to the condenser where the heat is removed, causing the vapor to return to the liquid form, making the refrigerant ready to flow back to the evaporator to pick up more heat.

Most Ice-O-Matic ice machine use R134a or R404a refrigerant. Always check the serial number data plate for the proper type of refrigerant and the amount used in the machine you are servicing.

R404a and R134a are both HFC refrigerants, which result in no ozone depletion factor. R404a cylinders are orange in color, R134a cylinders are light blue in color.

Important: When discharging refrigerant from an icemaker, recover as much of the refrigerant as possible with a recovery device or some other means to prevent the refrigerant from entering the atmosphere.

Method of Charging Refrigerant
In order to achieve a properly charged refrigeration system, the system must be completely evacuated.

To achieve a complete evacuation you will need a service gauge manifold with properly maintained hoses, and a vacuum pump capable of pulling a 50-micron vacuum. This will require a two-stage pump.

Connect the service gauge manifold to the high and low side service ports and vacuum pump. Make sure the valves on the gauge manifold are closed, then start the pump.

Note: Do not use a refrigeration compressor as a vacuum pump. Compressors are able to pull only a 50,000-micron vacuum.

After the vacuum pump has been started, open the valves on the gauge manifold. This will allow the refrigeration system to start being evacuated.

If there has not been an excessive amount of moisture in the system, allow the vacuum pump to pull the system down to about 200 microns or 29.9 inches or less. Once this has been achieved, allow the vacuum pump to operate for another 30 minutes. Then close the valves on the gauge manifold and stop the vacuum pump. Then watch your gauges. A rise to 500 microns in three (3) minutes or less indicates a dry system under a good vacuum.

If your gauge registers a more rapid rise, the system either has moisture remaining or there is a leak in the system, requiring a check for the leak, and repair and another complete evacuation.

Note: Seal the ends of the gauge manifold hose and pull them into a deep vacuum to determine if the leak is not in the hoses. The gauge manifold should be able to hold the vacuum for three (3) minutes.

If the refrigeration system is extremely wet, use radiant heat to raise the temperature of the system. This action will cause the moisture to vaporize at less of a vacuum.

The use of two (2) valves, one between the vacuum pump and gauge manifold and the other between the refrigerant cylinder and the gauge manifold allows you to evacuate and charge the system without disconnecting any hoses. If the hoses were disconnected, air or moisture will have the opportunity to enter the hoses and then the system.

A properly charged icemaker is a service technician's greatest ally. Proper charging will allow any concern with the icemaker to be accurately diagnosed.

The refrigerant charge must be weighed into the icemaker either by using a charging scale or with a dial-a-charge.

The amount of proper refrigerant required for the icemaker is printed on the serial data plate attached to the icemaker and is listed on the following pages. Never vary the amounts from those listed.

Important!

Pre VRC Models
Remote models with sixty (60) foot lineset runs will need an additional fifteen (15) ounces of refrigerant added.

VRC Models
Maximum **actual line set run** is limited to 100 ft. Add ¼ ounce of refrigerant for each actual foot from 75 feet to 100 feet actual lineset run.

In some cases the complete refrigerant charge may not enter the refrigeration system. In those instances, close the gauge manifold high side valve and disconnect the manifold from the high side port.

When the icemaker is completely charged, secure the caps to the service ports and check to make sure the ports are not leaking refrigerant.

Reference Tables on Page **I6** and **I16**.

Control Circuit
All machines in this manual are electro-mechanical controlled; however the control circuitry on the single evaporator units differs from the dual evaporator units and is detailed below.

Selector Switch
The selector switch is used to put the machine into the ICE making or WASH cycle or to turn the machine OFF. The WASH position allows only the water pump to run and is used during the cleaning process to circulate cleaning solution throughout the water system. When the selector switch is turned to the ICE position, the machine begins the freeze cycle.

Contactor
When the selector switch is in the ICE position, the contactor coil is energized and pulls in the contactor contacts. This energizes the compressor start components, which starts the compressor.

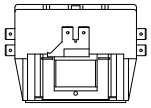

Purge Switch
The purge switch is a momentary switch used to manually energize the purge valve. It is used during the cleaning process to flush the cleaning solution from the water trough. The purge valve will remain energized as long as the purge switch is depressed.

Note: Single Evaporator Units. The normally closed contacts of the purge switch also create a circuit to relay 1. These contacts should remain closed unless the switch is depressed. If the switch is defective and the normally closed contacts are open when the machine enters harvest, the machine will return to freeze when the timer initiate control opens.

Compressor and Start Components
The compressor should run during the entire cycle. If the machine is in the ICE position but the compressor is not running, check the compressor contactor to see if it is engaged. If the contactor is not engaged, the problem is not with the compressor or the compressor start components. If the contactor is engaged and there is correct voltage through the contactor, there could be a problem with one of the starting components or the compressor. It is recommended that the compressor starting components be replaced when replacing a compressor.

Compressor Check

⚠WARNING **Disconnect power before servicing**

If the compressor uses an internal overload, be certain that the compressor has cooled and the overload has reset before diagnosing the compressor. If the compressor is cool and is still not running, check the compressor motor windings by first removing the wires at the compressor terminals. With an ohmmeter, check for continuity between all three terminals, if an open circuit exists between any of the terminals, the compressor may need to be replaced. Check for continuity from each terminal to the compressor body, if continuity is found from any terminal to the compressor body, the compressor windings are shorted to ground and the compressor will need to be replaced. If the compressor appears to be good at this point, it is advisable to use a compressor analyzer to isolate the compressor from the start components while checking for a locked rotor. If an analyzer is not available, the compressor starting components must be checked.

Compressor Check (Continued)
If all starting components are good, check the voltage from the common terminal of the compressor, making sure proper voltage is supplied to the compressor and all wiring is properly connected. If the compressor does not start and there is excessive amperage draw, (see locked rotor amps on compressor tag) the compressor has a locked rotor and should be replaced.

Important: Compressors returned to the factory for warranty are tested and will not be covered under the warranty policy if they are not defective.

Overload (External)
If there is no amperage draw check the compressor overload. The compressor overload can be checked for continuity after removing it from the compressor and letting it cool to room temperature. If there is no continuity between the two terminals, replace the overload. If the overload is suspected of opening prematurely, it should be replaced with an overload, which is known to be good.

Capacitors
The start capacitor is an electrical storage device used to provide starting torque to the compressor. If a start capacitor is defective, the compressor will not start properly.

The run capacitor is an electrical storage device used to improve the running characteristics and efficiency of the compressor.

Before checking a capacitor, it should be discharged by shorting across the terminals. If a run or start capacitor is cracked, leaking or bulging it should be replaced. If a capacitor is suspected of being defective, it can easily be checked by replacing it with a capacitor of the correct size, which is known to be good. If the compressor starts and runs properly, replace the original capacitor. A capacitor tester can also be used.

Start Relay
The start relay breaks the electrical circuit to the start windings when the compressor motor speed increases. If the relay is defective, the compressor will not start or it may start but will run for a very short time.

A compressor relay can be checked by removing the relay and checking the relay contacts for damage and check for continuity across the closed relay points. Check the relay coil with an ohmmeter. If no continuity is read, replace the relay.

Untimed Freeze Cycle

During the freeze cycle the compressor, water pump and condenser fan motor(s) (if used) are running. On remote systems the liquid line solenoid is also energized, see Refrigeration System. As ice forms on the evaporator, the suction pressure drops. The machine is in the untimed portion of the freeze cycle and will remain in untimed freeze until the suction pressure drops low enough to close the timer initiate control. See page **I1-I6** for operating pressures.

Timer Initiate

The timer initiate is a low-pressure control that closes (cut in) on a drop in suction pressure. When the timer initiate control closes, the freeze timer is energized and the machine enters the timed portion of the freeze cycle. When the machine enters harvest, the suction pressure rises and opens the control. The timer initiate control should be adjusted per the chart on page **I1-I6**.

The timer initiate is factory set and does not normally need to be adjusted. If the ice bridge thickness is incorrect, the freeze timer should be adjusted rather than the timer initiate. See page **F4** for freeze timer adjustment procedure. The timer initiate may need to be adjusted if excessive time (more than 7 minutes) is needed on the timer to achieve proper bridge thickness of if very little time (less than 1 minute) is needed on the timer to achieve proper bridge thickness.

If the timer initiate is suspected of being out of adjustment or not operating properly, check the control as follows. Make sure the high temperature safety control is not open, see page **F8**. Turn the machine off and disconnect incoming power by unplugging the machine or switching the circuit breaker OFF. Attach one lead of a voltmeter to terminal 1 and the other lead to terminal 2 of the timer initiate control. Reconnect incoming power and turn the machine to the ICE position. Connect a low pressure gauge to the machine. The volt meter should read line voltage until the timer initiate control closes at which point the voltmeter should read zero volts. Note the suction pressure at this point. Adjust the timer initiate if necessary. Turning the adjustment screw counter clockwise will lower the cut in pressure, turning the adjustment screw clockwise will raise the cut in pressure. The differential is preset and does not require adjustment. If the control cannot be adjusted to the correct pressure setting or if the cut in point is erratic the control must be replaced. If the suction pressure is not dropping properly, see the Troubleshooting Tree “Machine Does Not Enter Harvest” in Section C.

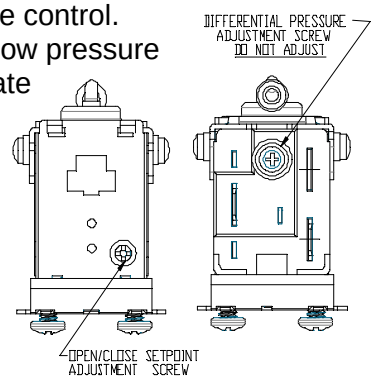

Relay 1

Relay 1 is used to energize the fan motor on air-cooled units. The fan is energized through the common and normally closed contacts.

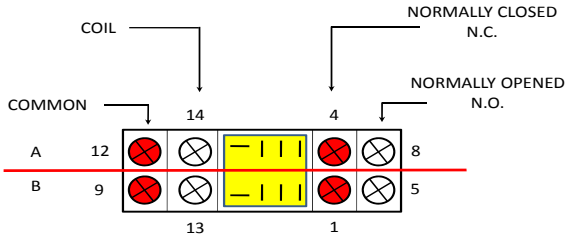

Relay 2 (Note: Relay 2 is not used on Undercounter models)

On single evaporator machines, relay 2 is used only to bypass the bin control during the freeze cycle and the first part of the harvest cycle. Relay 2 is energized through the normally closed contacts of the cam switch at the beginning of the freeze cycle. When energized, Relay 2 will prevent the machine from shutting off if the bin switch opens. The relay will remain energized until the cam switch is lifted onto the high part of the cam during harvest. At this time the machine will shut off if the bin switch is open.

Relay 3 and Relay 4 (ICE1506 Applications) Relay 3 and Relay 4 bypass the bin switches to allow the curtains to open and close during the freeze cycle on an ice dispenser application. This will prevent the ice machine from shutting off during dispenser agitation.

Timed Freeze
When the freeze timer is energized, the machine is in the timed portion of the freeze cycle. The freeze timer will time out the remainder of the freeze cycle. Once the time has passed, the machine will enter the harvest cycle.

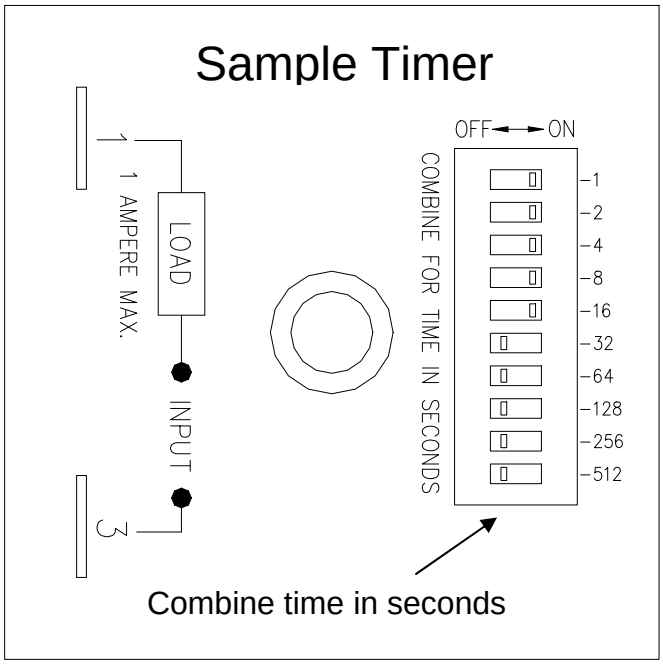

Freeze Timer
The freeze time is an adjustable timer used to control the ice bridge thickness. The freeze timer is factory set but may need to be adjusted upon initial start up of the machine. When time is added to the freeze timer, the length of the freeze cycle is increased, therefore the ice bridge thickness is increased. When time is removed from the timer, the freeze cycle is decreased and the ice bridge thickness is decreased.

The freeze timer can be adjusted by sliding one or more switches to either the **ON** or **OFF** position to obtain the setting which will produce the proper bridge thickness.
The factory initial timer settings are **<u>64 and 128 for a Half Cube</u>** and **128 and 256 for a Full Cube.**

The ice bridge thickness should be approximately 3/16" (5mm) on the ICEU undercounter series, ICE0250 and ICE0305, and 1/8" (3 mm) on ICE0400 and larger units. If the bridge is too thick, remove enough time from the timer to achieve proper thickness. If the bridge is too thin, add enough time to the timer to achieve proper thickness.

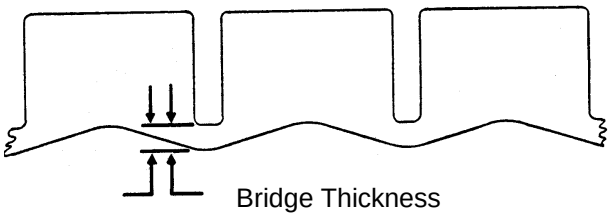

Check the freeze timer for proper operation as follows: Make sure that the high temperature safety control is not open, see page **F8**. Turn the machine OFF and disconnect the incoming power by unplugging the machine or switching the circuit breaker OFF. Attach one lead of a voltmeter to terminal 1 and the other lead to terminal 3 of the timer.

Reconnect incoming power and turn the machine to the ICE position. The volt meter should read zero volts until the timer initiate closes at which point the timer will energize and line voltage should be read.

When the timer counts out, the voltmeter will again read zero volts. The time it takes the freeze timer to time out, once it has been energized should match the timer adjustment. If it does not or if the timer never closes, the timer is defective.

Note: The hot gas delay timer utilized on the ICE1400, ICE1506, ICE1606, ICE1800 and ICE2100 Series cubers should always be set at <u>4 seconds</u>. (<u>Not applicable on Version 3 & 4</u>)

Harvest Cycle

Single Evaporator Machines

Once the freeze timer has timed out, power is sent to relay 1 and the machine enters the harvest cycle. Once in harvest, the purge valve, hot gas valve and harvest motor are energized. The water pump continues to run during the first part of the harvest cycle so that mineral laden water remaining in the water trough can be pumped through the purge valve to the drain. The harvest motor turns the clutch assembly to actuate the cam switch.

The cam switch is in the normally closed position during freeze and at the beginning of harvest. Once the clutch turns far enough to actuate the cam switch, the water pump and purge valve is de-energized. The harvest motor continues to turn the clutch. When the cam switch returns to the normally closed position, the machine returns to the freeze cycle.

If the bin switch is open when the cam switch is actuated by the high part of the cam, the machine will shut off. Remote units pump down before shutting off.

Relay 1

When relay 1 is energized, the normally open contacts (1-B) close sending power to the hot gas valve and harvest motor and (1-A) close sends power to the purge valve and the coil of relay 1 to keep the coil energized when the timer initiate opens. The fan motor on self contained air cooled model are wired through the NC contacts of relay 1, when the contacts open during harvest, the condenser fan motor is de-energized.

Note: The operation of the Hot Gas Valve and Water Pump vary by model number, reference the wiring diagram on the specific model number for operation sequence.

Relay 2 See Page F3.

Dual Evaporator Machines (Prior to Jan 08)

Once the freeze timer has timed out, power is sent to: (A) harvest motor 1 and relay coil 1 through the normally closed contacts of cam switch 1, (B) to harvest motor 2 and relay coil 2 through the normally closed contacts of cam switch 2. The contacts of relay 1B and 2B closing, energizes the 4-second hot gas delay timer (Right Hand Timer)

This 4-second delay will allow the harvest motors to rotate and allow the cam switches to switch to the normally open position before the low-pressure control opens during hot gas. The cam switches are now in the normally open position and will continue to energize the harvest motors and relays until the cam rotates and the switch returns to the normally closed position.

Once the 4-second delay timer has timed out, the hot gas valves and purge valve will energize and allow hot gas into the evaporators. The bin control switches are by passed through the normally open contacts of relay 1A and 2A.

The bin switches are bypassed to allow the cam switch to return to the normally closed position prior to the machine shutting down if the curtain is open. Each harvest assist motor will only make one revolution prior to shutting down on full bin or advancing to the next freeze cycle.

Both hot gas valves and the water purge valve remain energized until both harvest assist motors complete one revolution. The water pump is energized throughout the harvest cycle. The unit will shut down if the curtains are open during the freeze cycle. Remote units pump down before shutting off. The fan motors on self contained air cooled model are wired through the NC contacts of relay 1B, when the contacts open during harvest, the condenser fan motors are de-energized.

Harvest Assist Assembly*

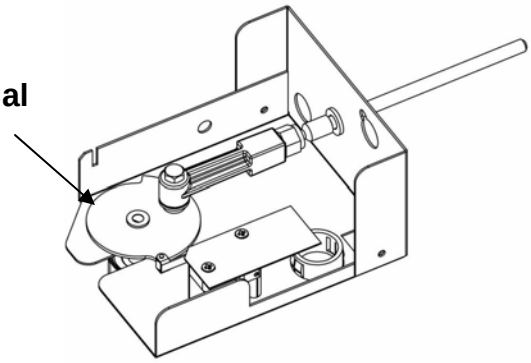

***Note: Harvest Assist Assemblies factory installed from Serial Number 1507 utilize a cam only and a synchronous motor. Service parts are not available for both configurations; the complete assembly must be replaced.**

The harvest assist assembly has several purposes: to assist in moving the ice off of the evaporator, to control purge duration, control the length of harvest and to terminate harvest. When the machine enters harvest, power is sent to the harvest motor which turns a slip clutch*. A probe is attached to the rotating clutch* and is pushed against the back of the ice slab. The clutch* begins to slip when the probe applies approximately 25 ounces of pressure against the ice slab.

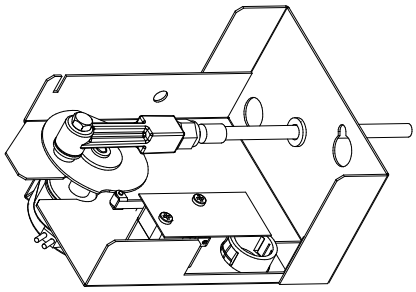

It takes approximately 1 minute for hot gas to heat the evaporator enough to loosen the ice from the evaporator plate. At this point the clutch* pressure overcomes the capillary attraction of the ice to the evaporator plate and the ice begins to move off of the evaporator. As the ice is being pushed, the clutch stops slipping and begins to turn, extending the probe enough to push the ice completely off of the evaporator.

Harvest Motor*

The harvest motor is energized at the beginning of harvest and will remain energized until the machine returns to the freeze cycle. A defective harvest motor will usually not run. The harvest motor rotates in a **clockwise** direction. It is possible for a defective motor to run backwards (counterclockwise). If this happens the motor must be replaced. It is also possible for a defective motor to “bump” backwards immediately when entering harvest. This will activate the cam switch and cause the machine to return to the freeze cycle immediately after entering harvest. If the machine is in harvest only for a split second, the harvest motor may be defective. Verify the motor is defective by watching the clutch* closely when the machine enters harvest.

Clutch Assembly*-Pre 1507 Serial Number

The clutch assembly consists of a slip clutch* and cam. A probe is attached to the clutch* assembly and the harvest motor turns the clutch* during harvest. As the harvest motor turns, the clutch* will slip while the probe is pushed against the ice. The clutch* will continue to slip as long as the pressure required to move the ice is greater than the 25 oz. Once the evaporator has heated enough to break the bond of ice to the evaporator, the pressure required to move the ice becomes less than the 25 oz. and the clutch* begins to move.

The clutch* assembly is not adjustable. If the clutch* tension is weak (less than 25 oz.) a slow harvest or excessive ice meltage during harvest will result. If the clutch* pressure becomes too tight, the force of the probe against the back of the ice may cause the slab to break and the ice may not fall off of the evaporator. If the clutch tension is suspected of being too tight or loose, turn the clutch by hand. The clutch* should turn smoothly without “grabbing”, but should offer some resistance. If in doubt as to whether or not the clutch* is defective, compare the tension with one that is known to be good.

***Note: Harvest Assist Assemblies factory installed from Serial Number 1507 utilize a cam only and a synchronous motor. Service parts are not available for both configurations; the complete assembly must be replaced.**

Probe Tip and Swivel

The probe tip is attached to the clutch* and makes contact with the back of the ice slab during harvest. The swivel allows the probe tip to pivot as the clutch* turns so that the probe is pushed straight through the evaporator probe guide.

The tip of the probe should be flush with the back of the evaporator or recessed up the 1/16 of an inch (.16cm). The probe tip must not extend into the freezing area of the evaporator during freeze.

(Note: Units manufactured after June 2004 utilize a non adjustable probe.)

The length of the probe is adjustable by loosening the locknut and adjusting the probe in or out of the swivel. Once the probe has been adjusted to the proper length, tighten the locknut. If the probe tip binds during operation it may cause the clutch* to slip unnecessarily. This may occur if the harvest motor mounting bracket is not aligned properly or if the probe tip has excessive mineral deposits on it. Remove and clean the probe if necessary.

To check the probe tip for binding, remove the shoulder bolt holding the swivel to the clutch* and simulate the movement of the swivel and probe by moving the swivel in a circular motion around the outer portion of the clutch*. The swivel should also move freely. If any resistance is felt the bracket should be adjusted by loosening the bracket mounting screws and repositioning the bracket until the probe moves freely.

Cam Switch Operation-Single Evaporator Machines

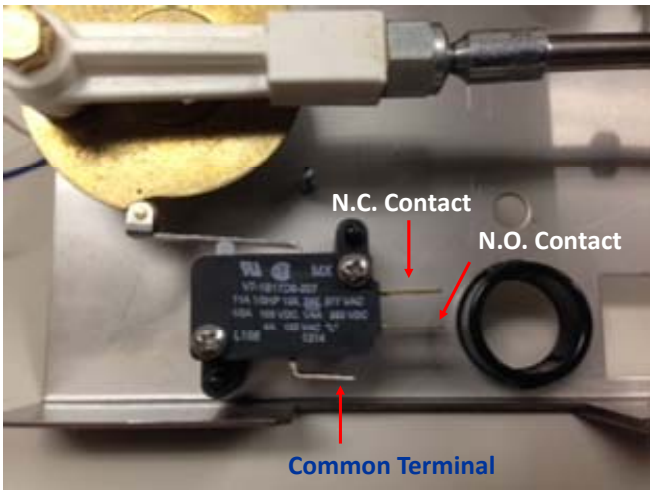

The actuator arm of the cam switch rides on the edge of the clutch* assembly and is actuated by the high and low portion of the cam. When the machine is in the freeze cycle the actuator arm of the cam switch is in the low part of the cam. During freeze, power is supplied to the water pump and relay 2, through the normally closed contacts of the cam switch. When the machine enters harvest, power is supplied to the water pump and purge valve through the normally closed contacts of the cam switch and through the normally open contacts of relay 1 (closed during harvest). The water pump, purge valve and relay 1 remain energized until the cam switch is lifted on to the high part of the cam. Relay 2 will also de-energize at this time allowing the machine to shut off if the bin switch opens. Undercounter machines manufactured after July of 2004 will have the water pump run continually until the machine shuts down.

Cam Switch Operation-Dual Evaporator Machines (Prior to January 2008)

Once the freeze timer has counted out, power is sent to: (A) harvest motor 1 and relay coil 1 through the normally closed contacts of cam switch 1, (B) to harvest motor 2 and relay coil 2 through the normally closed contacts of cam switch 2.

This **4-second** delay will allow the harvest motors to rotate and allow the cam switches to switch to the normally open position before the low-pressure control opens during hot gas. The cam switches are now in the normally open position and will continue to energize the harvest motors and relays until the cam rotates and the switch returns to the normally closed position.

The bin switches are bypassed to allow the cam switch to return to the normally closed position, prior to the machine shutting down if the curtain is open. Each harvest assist motor will only make one revolution prior to shutting down on full bin or advancing to the next freeze cycle. Both hot gas valves and the water purge valve remain energized until both harvest assist motors complete one revolution. The water pump is

Cam Switch Adjustment

Check the cam switch for proper adjustment by slowing turning the clutch by hand in a counterclockwise direction while listening for the switch contacts to change. The switch should have an audible "click" as the roller reaches the high part of the cam. Now slowly turn the clutch in a clockwise direction and the switch should have an audible "click" as the roller reaches the low part of the cam. **Units manufactured from June of 2004 do not utilize an adjustable cam switch**. If the cam switch is suspected of being defective it should be checked with an ohmmeter. **It should not be assumed that the switch is good because a "click" can be heard when moving the actuator arm.**

Note: Harvest Assist Assemblies factory installed from Serial Number 1507 utilize a cam only and a synchronous motor. Service parts are not available for both configurations; the complete assembly must be replaced.

High Temperature Safety Control

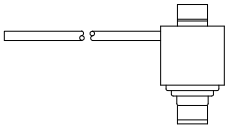

The high temperature safety control is a thermal disc that protects the machine if the machine "sticks" in the harvest cycle. The high temperature safety is clamped to the suction line near the expansion valve thermal bulb. It opens when the suction line temperature reaches 120ºF (48.8ºC) and closes when the temperature drops to 80ºF (26.6ºC). If the high temperature safety opens during harvest, it will de-energize the harvest components. If the high temperature safety is defective and fails open during the freeze cycle, it will not allow the relay(s) to energize and the machine will not enter harvest. Remove the high temperature safety control and check it with an ohmmeter to verify that it is defective.

Note 1: ICE0500R3, ICE0606R3, ICE0806R3 and ICE1006R3: The high temperature safety control specifications have been changed to open at 120° F and close at 100° F.

Note 2: On models where the high temperature safety control is mounted on the hot gas valve outlet tube, the specifications are open at 180ºF and close at 120 ºF.
Additionally the high temperature safety control is wired in series with the contactor. If the high temperature safety control opens for any reason, the compressor will shut down. This is an automatic reset control. **Do not allow the machine to operate without the high temperature safety control. Damage to the machine may result and the warranty will be void.**

Bin Control Operation

The bin control is used to shut the machine off when the bin fills with ice. The bin control must be checked upon installation or initial start-up and when performing maintenance. **Adjustments are not covered under warranty.**

There is one bin switch for each evaporator. The actuator arm of the bin switch comes in contact with the splash curtain. When the bin is full of ice, the splash curtain is held open when ice drops off of the evaporator. This releases the pressure of the bin switch actuator arm allowing the switch to open.

Single evaporator machines: If the bin switch opens during freeze, or the first part of harvest, relay 2 bypasses the bin switch and the machine will continue running. If the bin switch is opened during harvest, when the cam switch is lifted onto the high part of the cam, the machine will shut off. When the bin switch closes again, the machine will restart.

Dual evaporator machines: If either bin switch opens during the freeze cycle, the machine will shut off. Relay 1 and relay 2 will bypass the bin switches during defrost. If either bin switch is open when the machine returns to the freeze cycle, the machine will shut off.

Undercounter machines: A thermostatic bin control is used on the undercounter models. The bin thermostat is located in the control box with a capillary tube, which is in a brass thermo-well mounted to the water trough or right side of the bin. When ice comes in contact with the capillary tube thermo-well, the bin thermostat opens and the machine will shut off.

Bin Control Adjustment

All Models (Except Undercounter Models): Check the bin switch for proper adjustment by swinging the bottom of the curtain away from the evaporator. Slowly bring the curtain towards the evaporator. The switch should close when the bottom edge of the curtain is even with the outer edge of the water trough. Adjust the switch by loosening the nuts which the hold the switch bracket in place. Move the switch to the proper position and retighten the nuts. Recheck the adjustment. **Adjustments are not covered under warranty.**

Undercounter Models and ICE1506R

The Bin Thermostat used on these Self Contained Ice Cuber Machines is a sensitive device influenced by ambient conditions including altitude and temperature. The machine is set up to operate properly at the factory for 70°F at sea level. If your ice machine shuts off early, bin half full, or doesn't shut off, bin overflowing, please follow these instructions to set the bin thermostat.

1. These instructions are best followed on a full ice bin with at least 3 inches of ice resting against the brass thermal well. The machine must be running to perform this adjustment; follow step two if the machine is off.
2. Turn the thermostat adjustment screw clockwise until it stops; this is the max cold setting and will prevent the machine from shutting off.
3. Hold a minimum of 3 inches of ice against the middle of the brass thermal well for 3-4 minutes. It is imperative that enough ice be used for the prescribed time to properly cool the thermostat.
4. Slowly turn the adjustment screw counter-clockwise until the machine shuts off. If the screw is turned too quickly, the thermostat could be set to too warm a temperature. Turn slowly.
5. Remove the ice from the well and warm the brass with your hand; the machine should turn back on. The ice machine is now set for ambient conditions. If the ice machine location experiences significant changes in ambient temperatures, this procedure will need to be followed again. **Adjustments are not covered under warranty.**

Pump Down System (Remote Only)

If a remote machine is shut down by the selector switch or bin control, the liquid line solenoid valve is de-energized allowing the valve to close. This blocks the flow of refrigerant causing all the refrigerant to be pumped into the receiver and condenser. This is done to prevent liquid refrigerant from migrating into the compressor during the off cycle, which could damage the compressor on start-up. Also see Pump Down System in the Refrigeration Section on page **E7**. As the refrigerant is pumped into the receiver, the suction pressure begins to drop. Once the suction pressure reaches approximately 10 psi (.68 bar) the pump down control contacts open, which will de-energize the compressor contactor. When the machine is turned back on, power is supplied to the liquid line solenoid which opens the valve and allows the suction pressure to rise enough to close the pump down controls contacts.

Pump Down Control

The pump down control is a low pressure control that shuts the machine off when the suction pressure drops during the pump down phase. The control is factory set to open at 10 psi (.68 bar) and close at 35 psi (2.41 bar). The pump down control does not normally need to be adjusted, however an adjustment may be made by turning the adjustment screw. **Note**: Later model machines have a non adjustable pump down control.

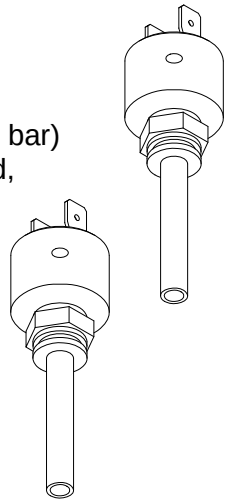

Fan Control

On models utilizing a fan control, the fan will cycle on at 250 psi (17.01) and cycle off at 200 psi (13.61 bar).

Electrical Sequence for the ICE1400 Series Version 3&4, ICE1800 Series Version 3&4 and the ICE2100 Series Version 3&4 Cubers. (Manufactured from January, 2008)

ICE1400A/W3&4, 1800W3&4 and 2100W3&4 Electrical Sequence (Includes 50 hz. And 3 Phase)

1. Suction Pressure starts out at approx 60 psi and slowly drops to close the LP Control.
2. The LP Control energizes Relay Number 2 Coil.
3. Relay Number 2A contacts C and NO close to bypass the bin switches, Relay Number 2B contacts close and energize the timer.
4. The Timer times out and energizes Relay Number 1 Coil.
5. Relay Number 1A contacts C and NO close to send power to Cam Switch Number 2 contacts C and NC which energizes Harvest Motor 2, Hot Gas 2 and Relay Number 3 Coil.
6. Relay Number 1B contacts C and NO close to energize Harvest Motor 1 and Hot Gas 1
7. Relay Number 1B contacts C and NC open to de-energize the fan motors.
8. When the LP Control opens during hot gas, the circuit is latched through the Purge Switch contacts C and NC.
9. Relay Number 3A contacts C and NO close to send power to the Selector Switch and Hot Gas Valves when the curtain is open.
10. Once Cam Switch 2 contacts C and NO close (High Side of the Cam) it will remain energized from the Selector Switch until contacts C and NC close. (Rotates 360 degrees)
11. Once Cam Switch 1 contacts C and NO close (High Side of the Cam) the Harvest Motor will be energized and the Water Pump and Purge Valve will be de-energized when contacts C and NC open.
12. With the bin switches open, Relay Number 3 Coil de-energized due to Cam Switch 2 contacts C and NC closing, the unit will shut off on full bin.

Notes:

- C=Common
- NC=Normally Closed
- NO-Normally Open
- Relay Number 9 & 12=Common
- Relay Number 1 & 4=Normally Closed
- Relay Number 5 & 8=Normally Open
- The Fan Control on the air cooled model cycles only one fan.
- Relay 1, Puts unit into defrosts.
- Relay 2, Bypasses the Bin Switches and initiates the Timer.
- Relay 3, Bypasses the bin Switches during harvest when Relay 2 is de-energized from a rise in the suction pressure opening the Low Pressure Control.

Electrical Sequence for the ICE1400 Series Version 3&4, ICE1800 Series Version 3&4 and the ICE2100 Series Version 3&4 Cubers. (Manufactured from January, 2008)

ICE1400R3&4, 1800R3&4 and 2100R3&4 Electrical Sequence (Includes 50 hz. And 3 Phase)

This unit incorporates a timer upstream of the Low Pressure Control for Low Ambients.

1. Timer number 2 (Six Minutes) is energized from the Selector Switch through Relay Number 3B contacts C and NC.
2. Timer Number 2 (Six Minutes) times out and energizes Relay Number 2 Coil.
3. Relay Number 2B contacts C and NO close which energizes the Low Pressure Control.
4. The Low pressure Control closes and energizes Timer Number 1.
5. The Timer times out and energizes Relay Number 1 Coil.
6. Relay Number 1A contacts C and NO close to send power to Cam Switch Number 2 C and NC which energizes Harvest Motor 2, Hot Gas Valve 2 and Relay Number 3 Coil.
7. Relay Number 1B contacts close to energize Harvest Motor 1 and Hot Gas Valve 1.
8. When the Low Pressure Control opens during hot gas defrost, the circuit is latched through the Purge Switch contacts C and NC.
9. Relay Number 3A contacts C and NO close to send power to the Selector Switch and Hot Gas Valves when the curtain is open.
10. Once Cam Switch 2 contacts C and NO close (High side of the Cam) it will remain energized from the Selector Switch until contacts C and NC close. (Rotates 360 degrees)
11. Once Cam Switch 1 contacts C and NO close (High Side of the Cam) the Harvest Motor will be energized and the Water Pump and Purge Valve will be de-energized when contacts C and NC open.
12. With the bin switches open, Relay Number 3 Coil de-energized due to Cam Switch 2 contacts C and NC closing, the unit will shut off on full bin.

Notes:
- C=Common
- NC=Normally Closed
- NO-Normally Open
- Relay Number 9 & 12=Common
- Relay Number 1 & 4=Normally Closed
- Relay Number 5 & 8=Normally Open
- Relay 1, Puts unit into defrosts.
- Relay 2, Bypasses the Bin Switches and initiates the Low Pressure Control
- Relay 3, Bypasses the Bin Switches during harvest when Relay 2 is de-energized from a rise in the suction pressure opening the Low Pressure Control and energizes Timer Number2

Electrical Sequence for theICE1506 Series Version 3 (Manufactured from January, 2008)

This unit incorporates a timer upstream of the Low Pressure Control for Low Ambients.

1. When the Selector Switch is set to ICE, Relay Number 2 Coil is energized through Cam Switch contacts C and NC (Bypasses the Bin Controls)
2. Relay Number 4B contacts C and NC energize Timer Number 2 (6 Minutes)
3. Timer number 2 times out and energizes Relay Number 3 Coil.
4. Relay Number 3B contacts C and NO close and energizes the Low Pressure Control.
5. The Low Pressure Control closes to energize Timer Number 1.
6. Timer Number 1 times out and energizes Relay Number 1 Coil
7. Relay Number 1A contacts C and NO close and send power Cam Switch Number 2 C and NC which energizes Harvest Motor 2, Hot Gas valves and Relay Number 4 Coil.
8. Relay Number 1B contacts C and NO close to energize Harvest Motor 1 and Hot Gas Valve 1.
9. When the Low Pressure Control opens during hot gas, the circuit is latched through the Purge Switch contacts C and NC.
10. Once Cam Switch 2 contacts C and NO close (High side of the Cam) it will remain energized from the Selector Switch until contacts C and NC close (Rotates 360 degrees)
11. Once Cam Switch 1 contacts C and NO close (High side of the Cam) the Harvest Motor will be energized and the Water Pump, Purge Valve and Relay Number 2 Coil will be de-energized when contacts C and NC open.
12. When Relay Number 2 Coil is de-energized and if the curtain switches or bin stat are open, the unit will pump down and shut off on full bin.

Notes:
- C=Common
- NC=Normally Closed
- NO-Normally Open
- Relay Number 9 & 12=Common
- Relay Number 1 & 4=Normally Closed
- Relay Number 5 & 8=Normally Open
- Relay 1, Puts unit into defrosts.
- Relay 2, Bypasses the Bin Switches.
- Relay 3,Energizes the Low Pressure Control
- Relay 4,Resets Timer Number 2

ICEU150/200/205/206 Air and Water Wiring Diagram

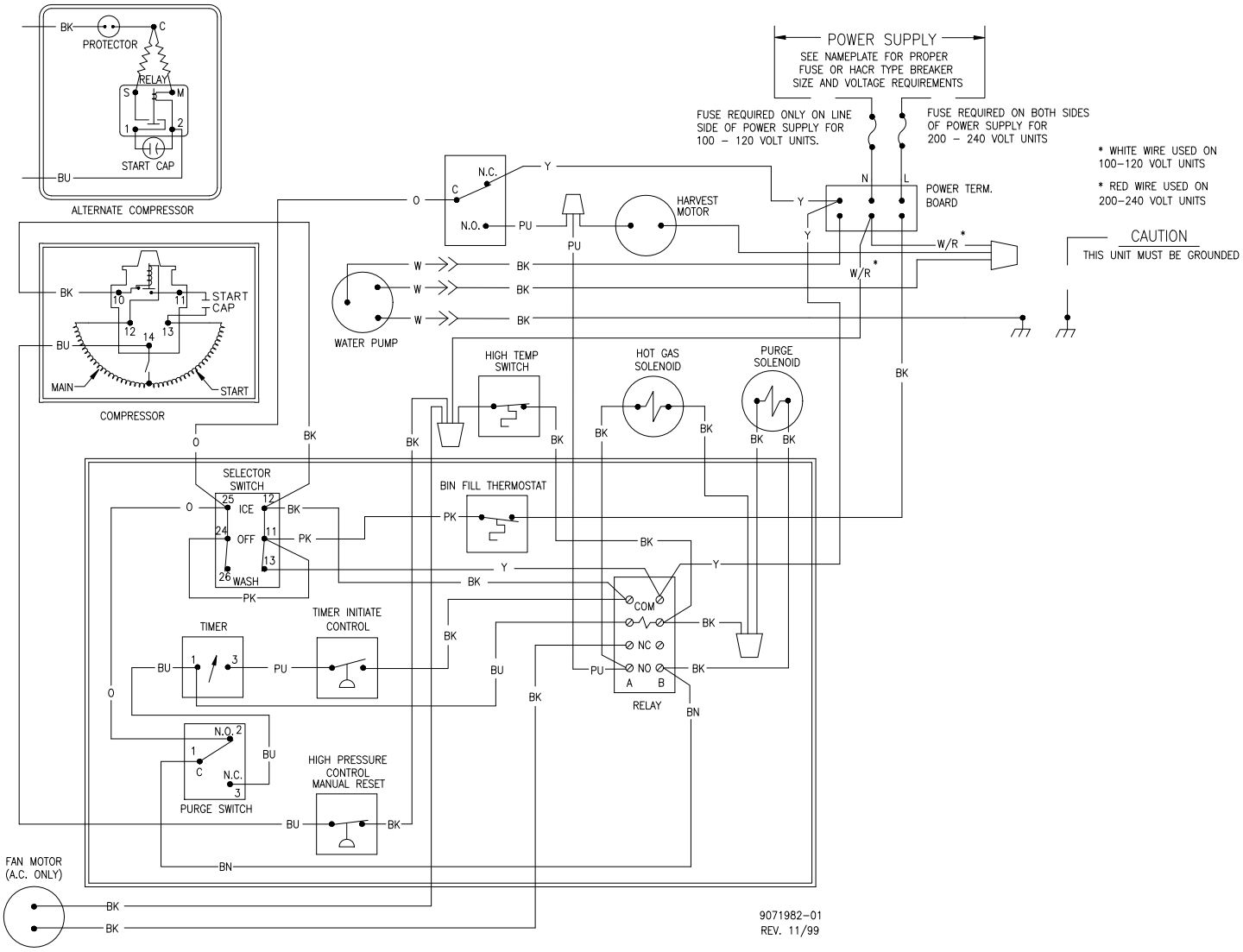

ICEU150/200/205/206 Air and Water Wiring Schematic

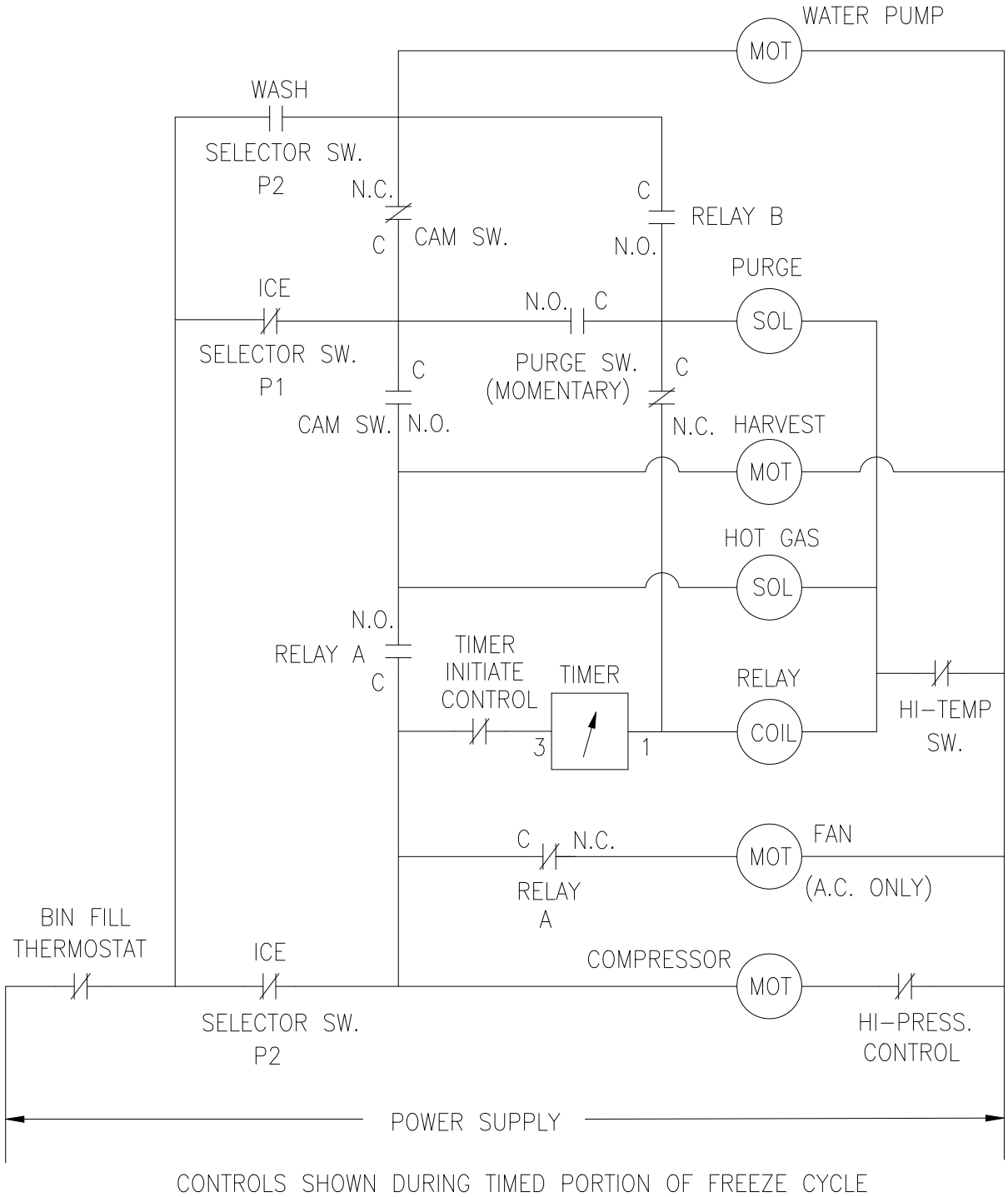

CONTROLS SHOWN DURING TIMED PORTION OF FREEZE CYCLE

ICEU150/220/225/226 Air and Water Wiring Diagram

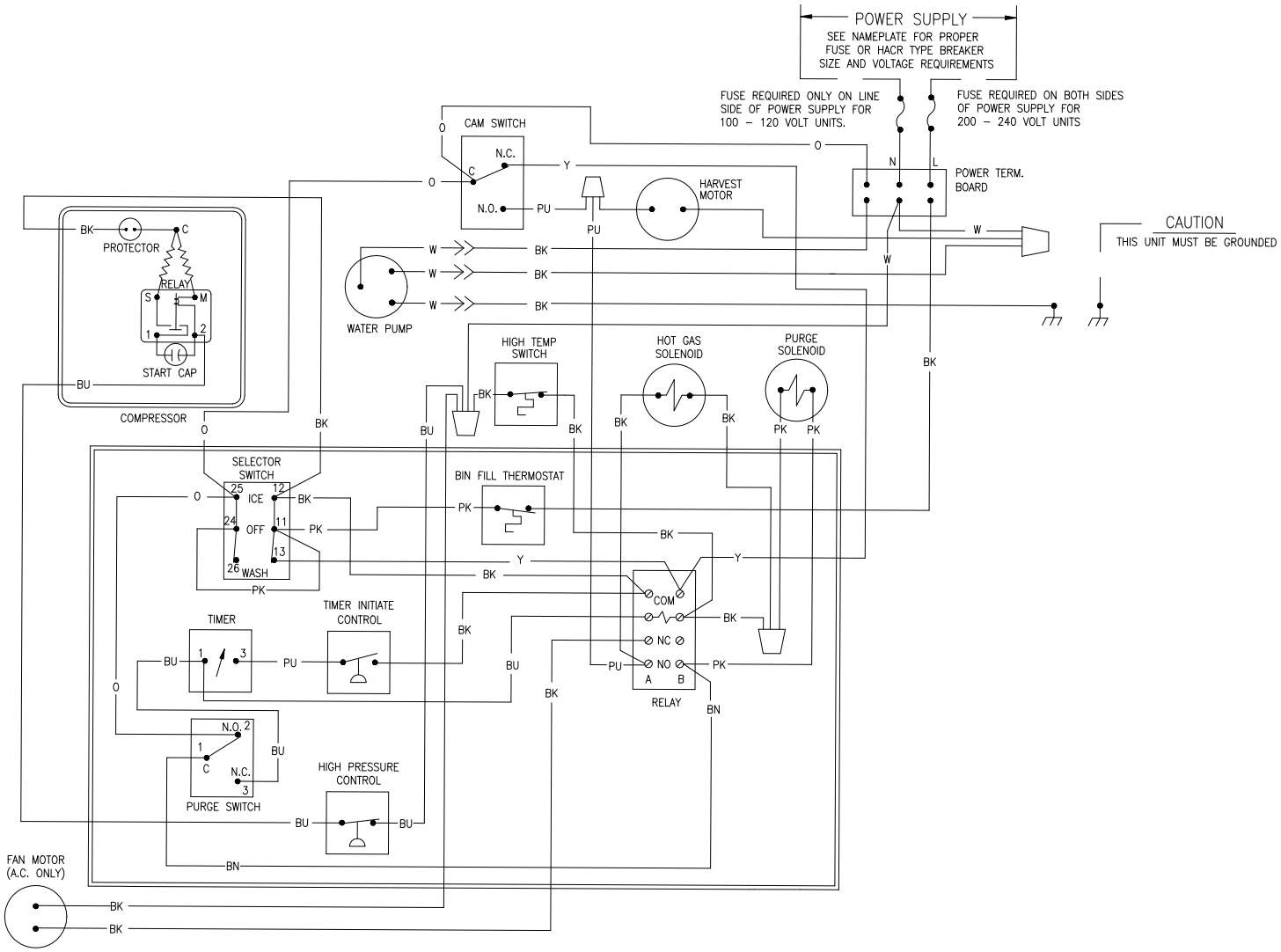

ICEU150/220/225/226 Air and Water Wiring Schematic

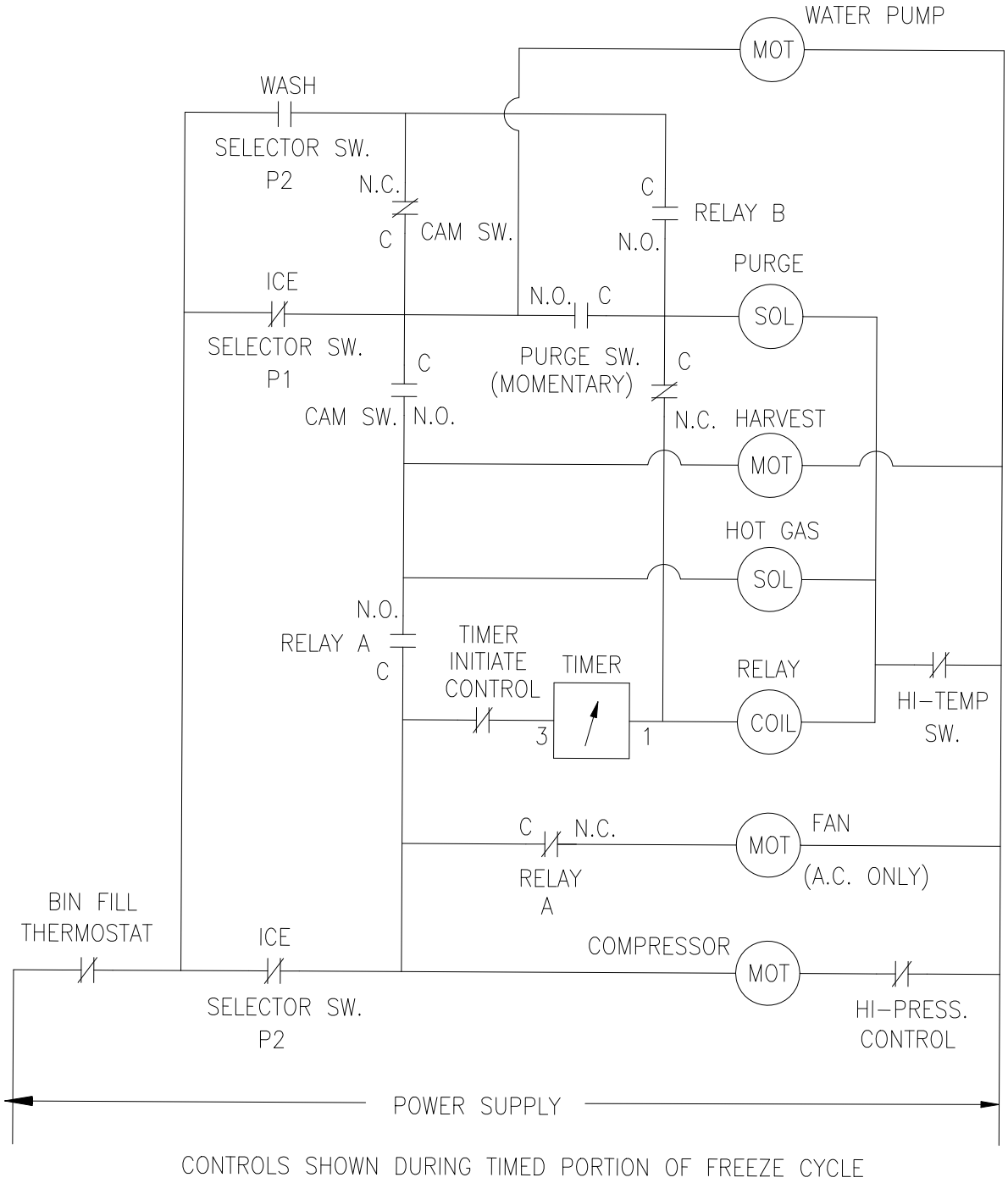

ICE0250 Air and Water Wiring Diagram

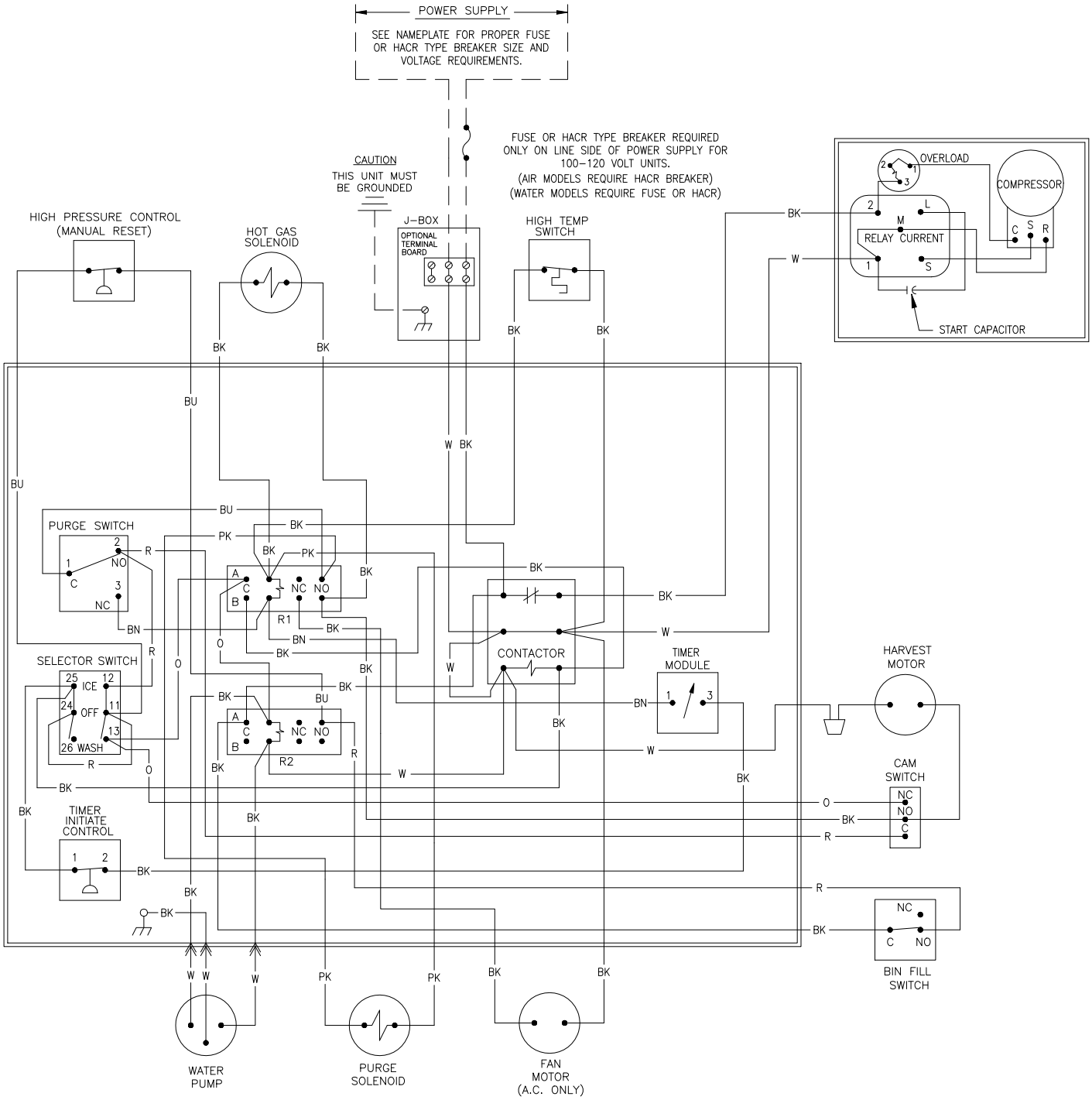

ICE0250 Air and Water Wiring Schematic

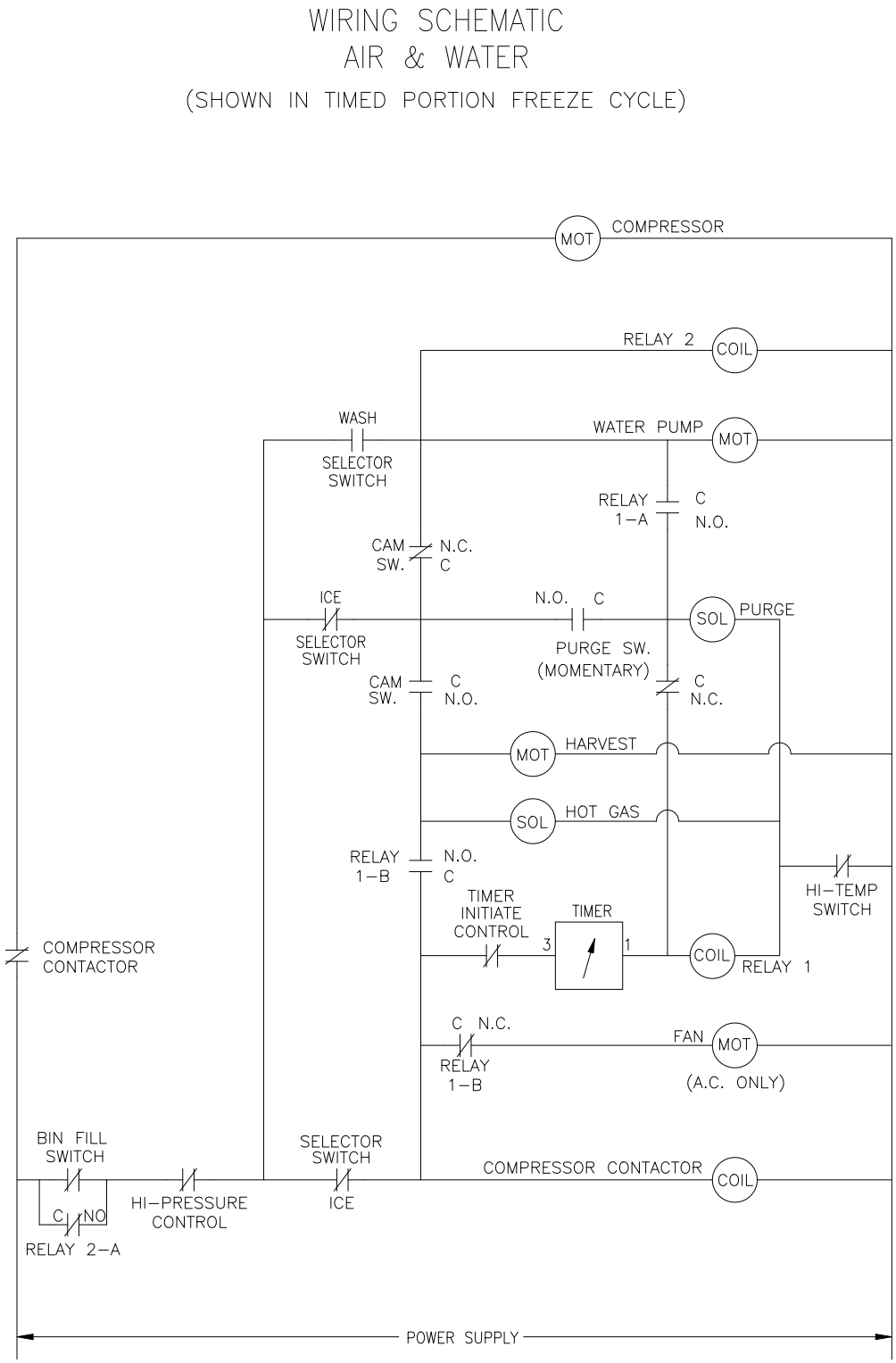

ICE0400 Air and Water Wiring Diagram

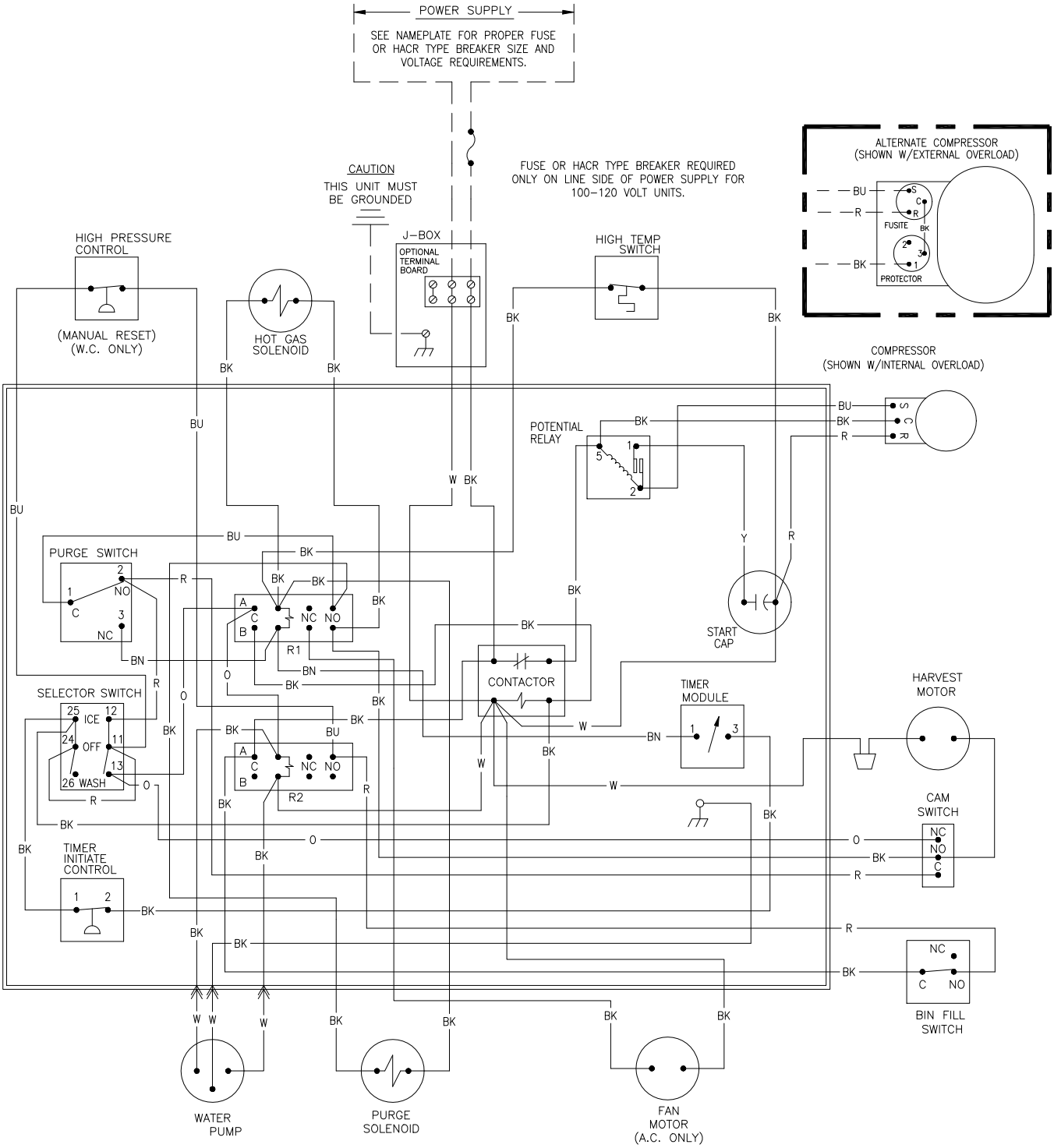

ICE0400 Air and Water Wiring Schematic

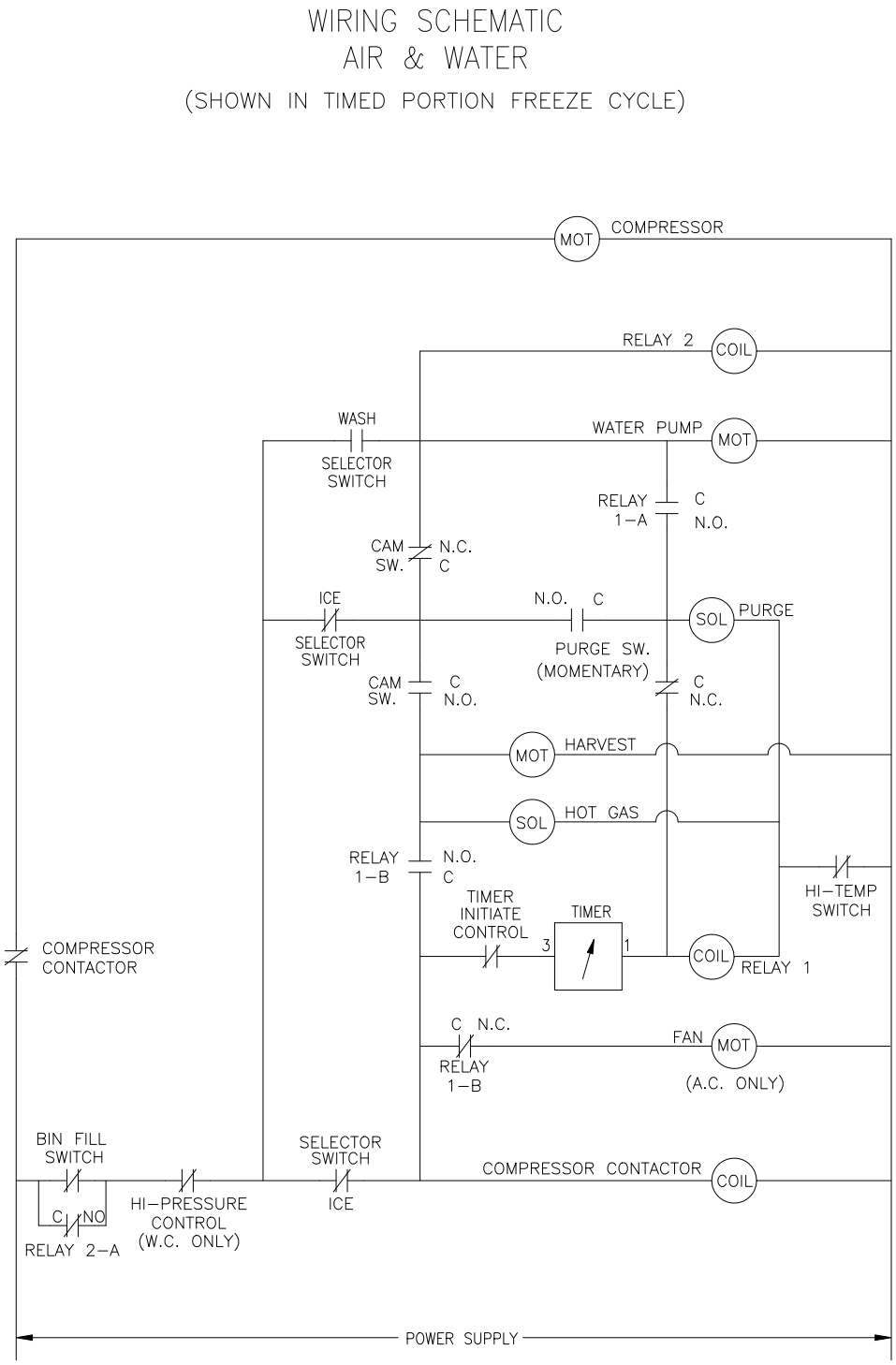

ICE0405/0406 Air and Water Wiring Diagram

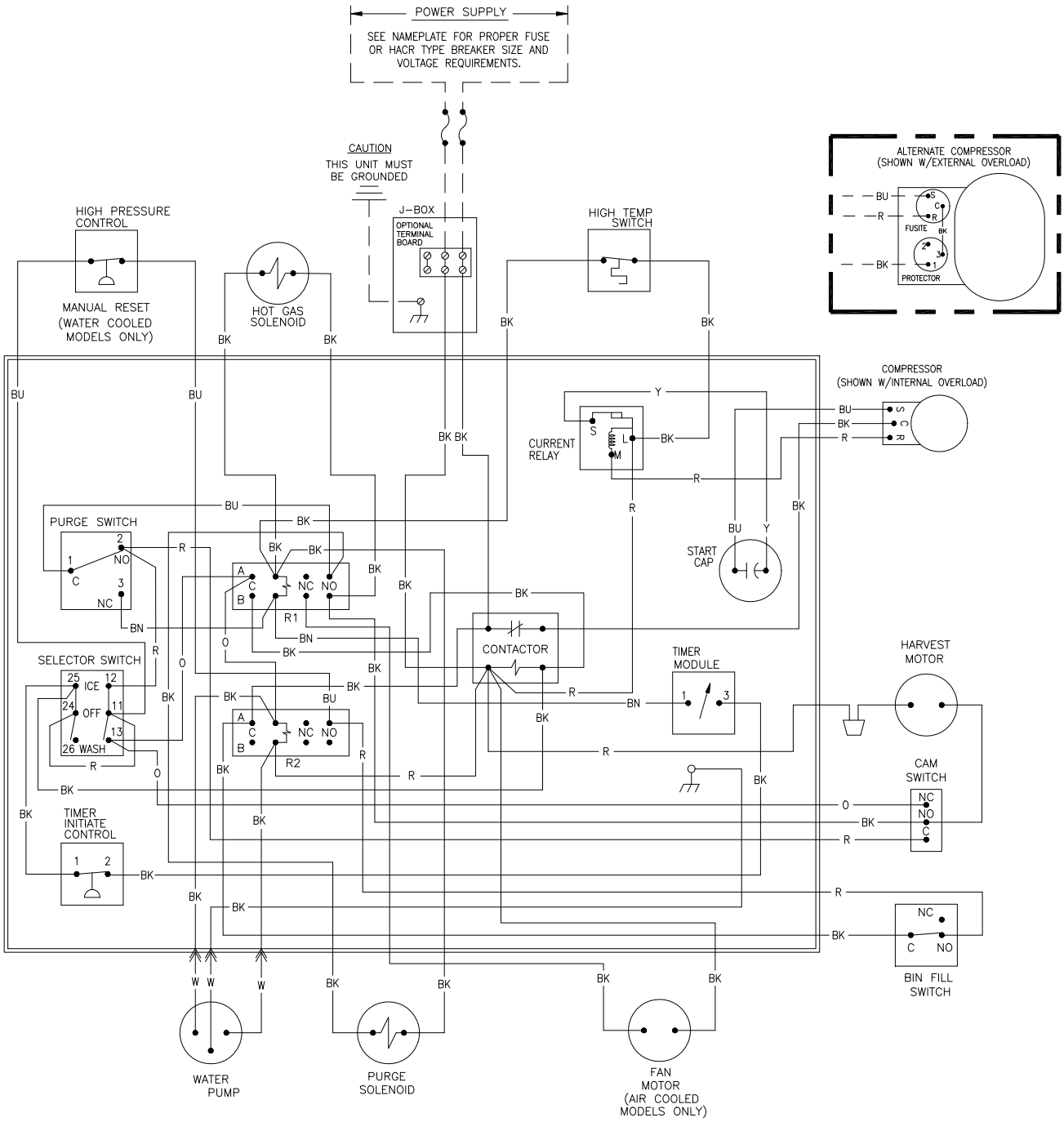

ICE0405/0406 Air and Water Wiring Schematic

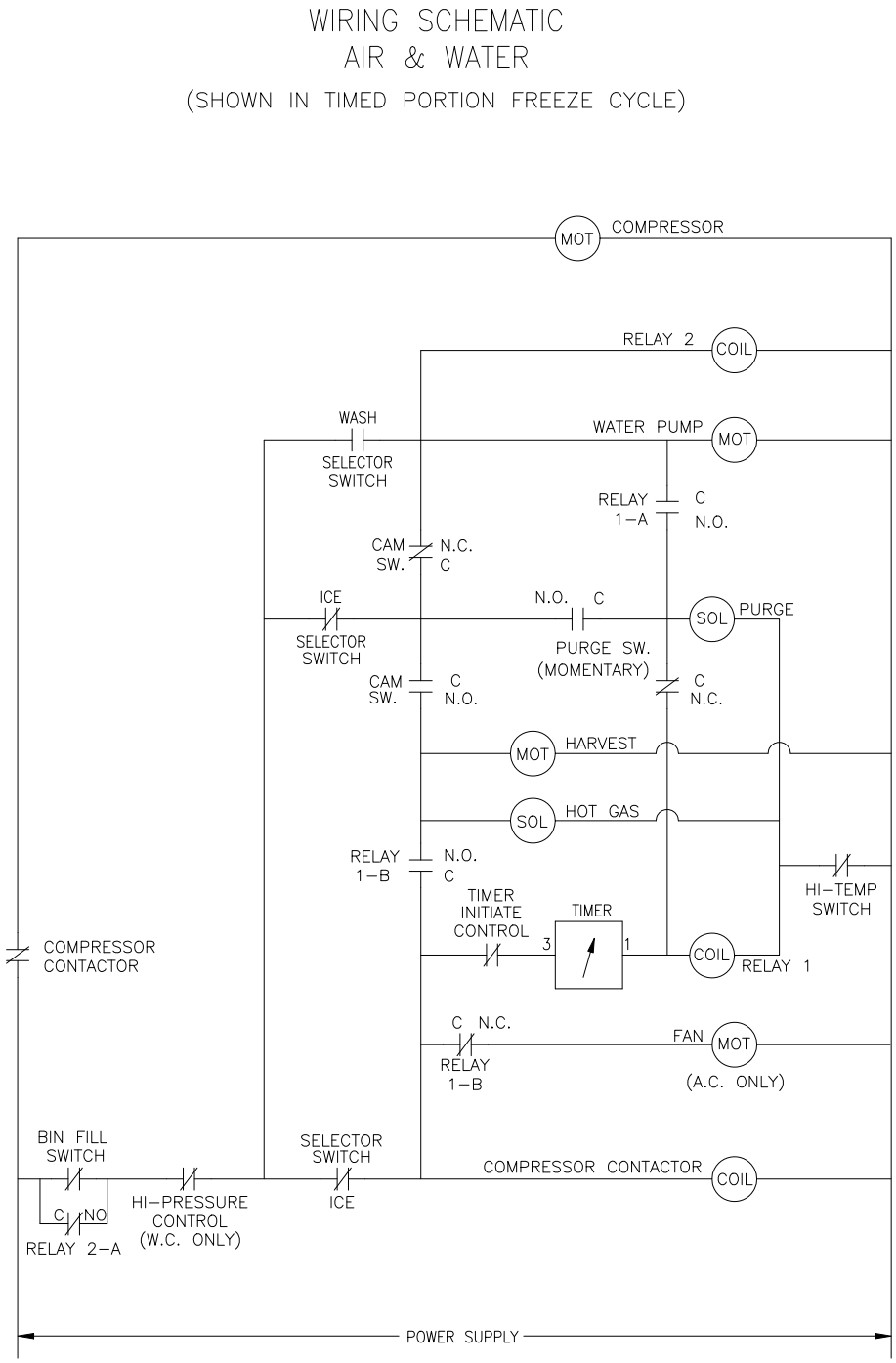

ICE0500 Air and Water Wiring Diagram

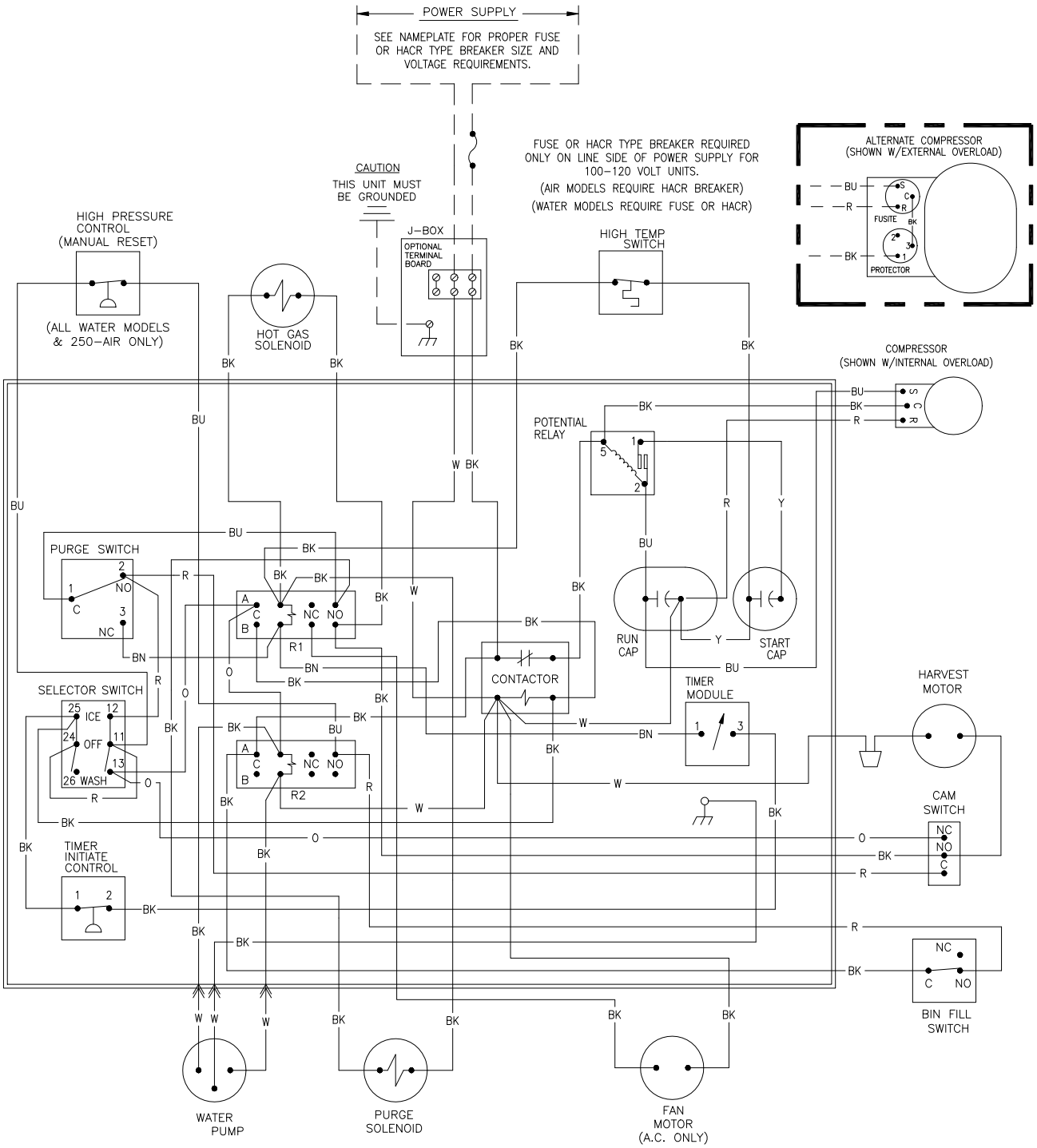

ICE0500 Air and Water Wiring Schematic

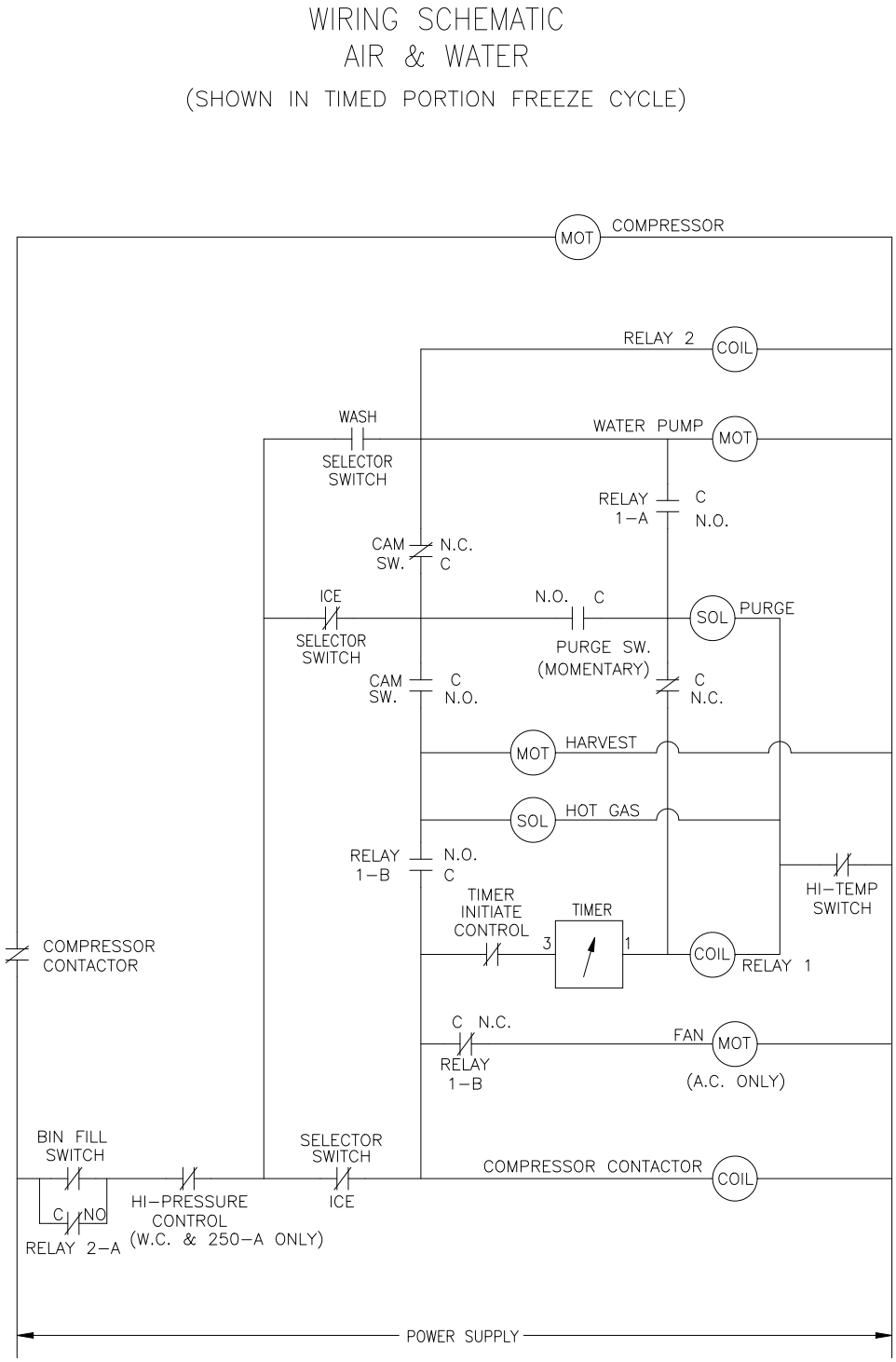

ICE0500 Remote Wiring Diagram

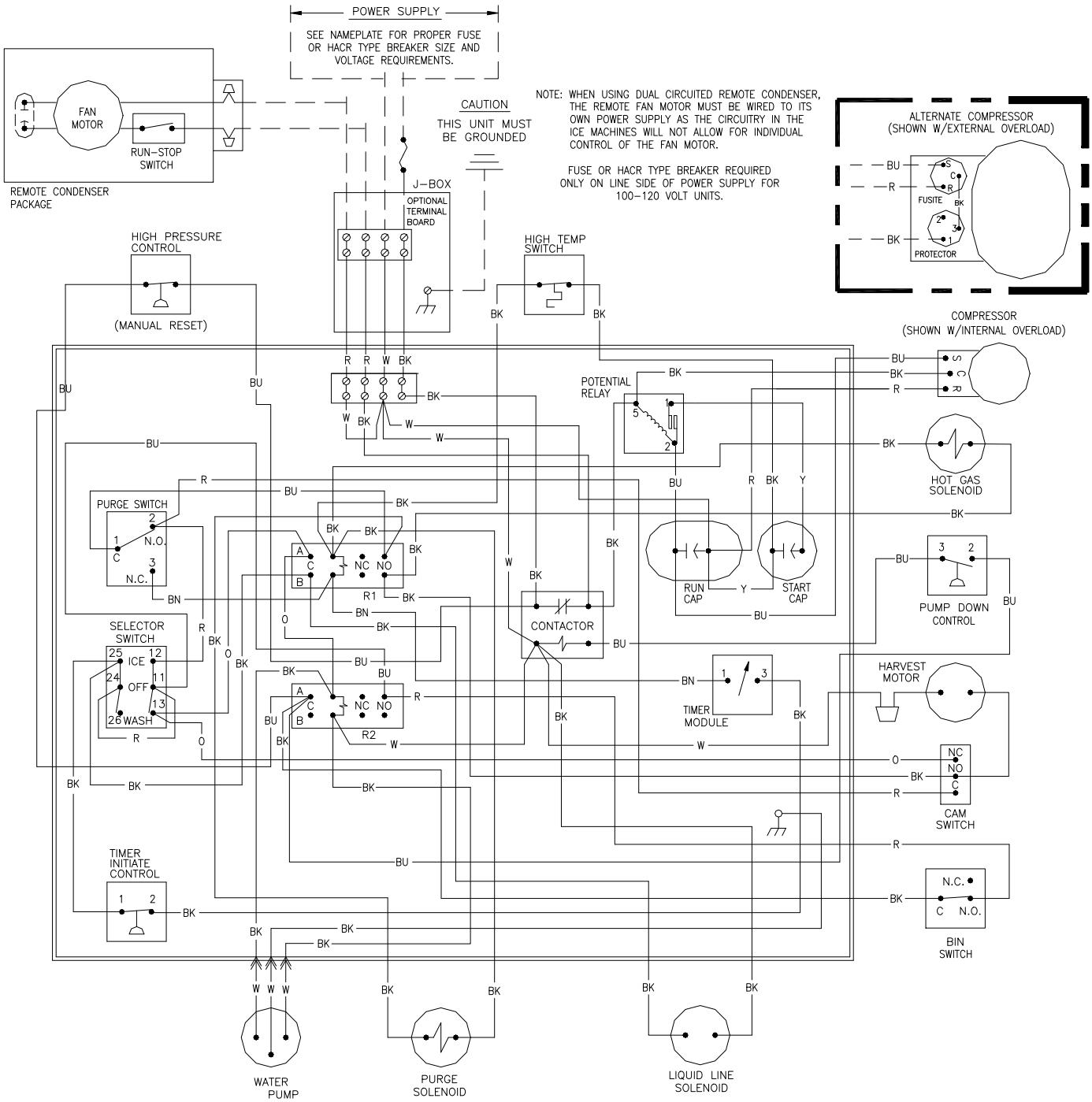

ICE0500 Remote Wiring Schematic

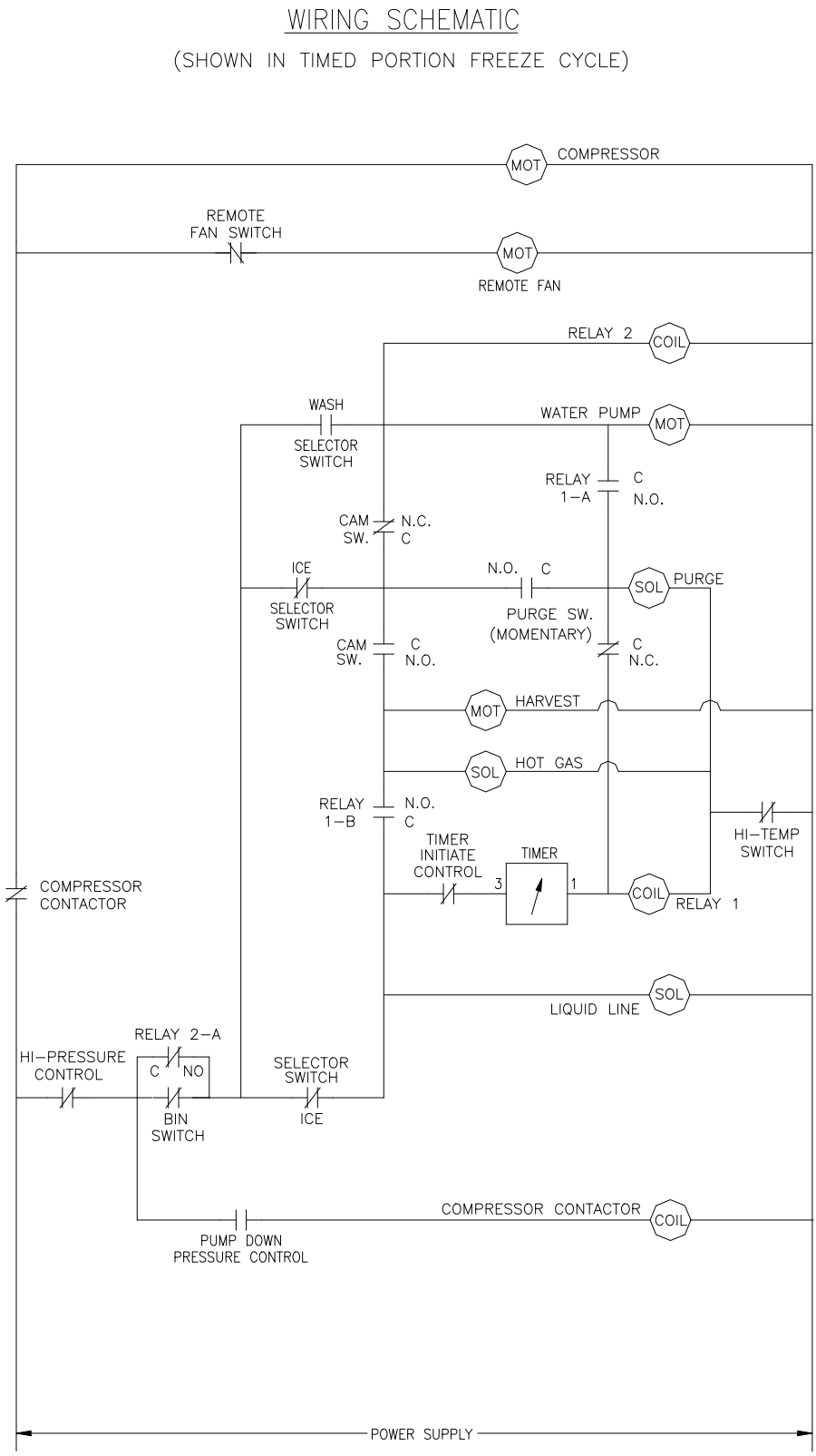

ICE0605/0606/0805/0806/1005/1006 Air and Water Wiring Diagram

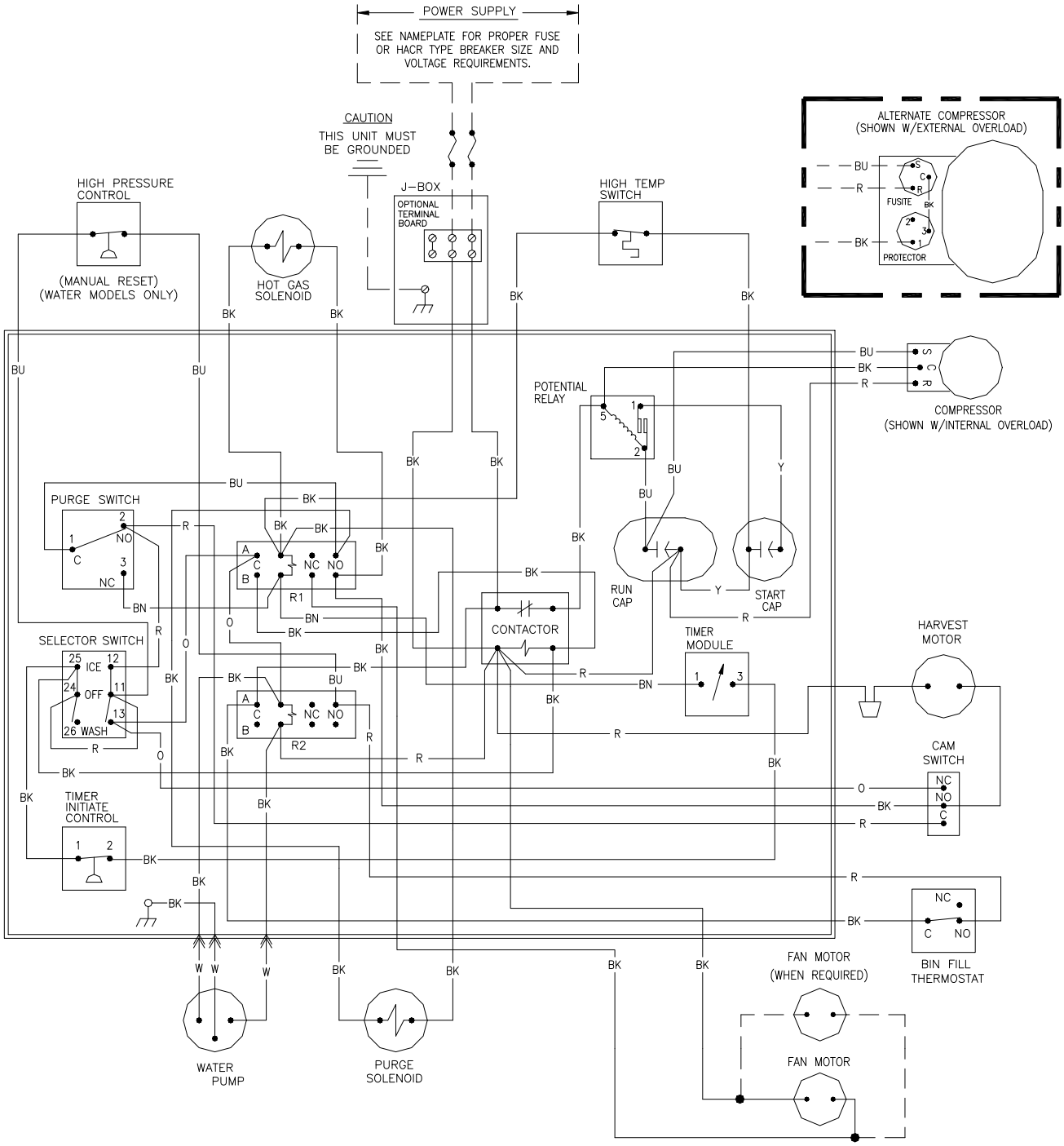

ICE0605/0606/0805/0806/1005/1006 Air and Water Wiring Schematic

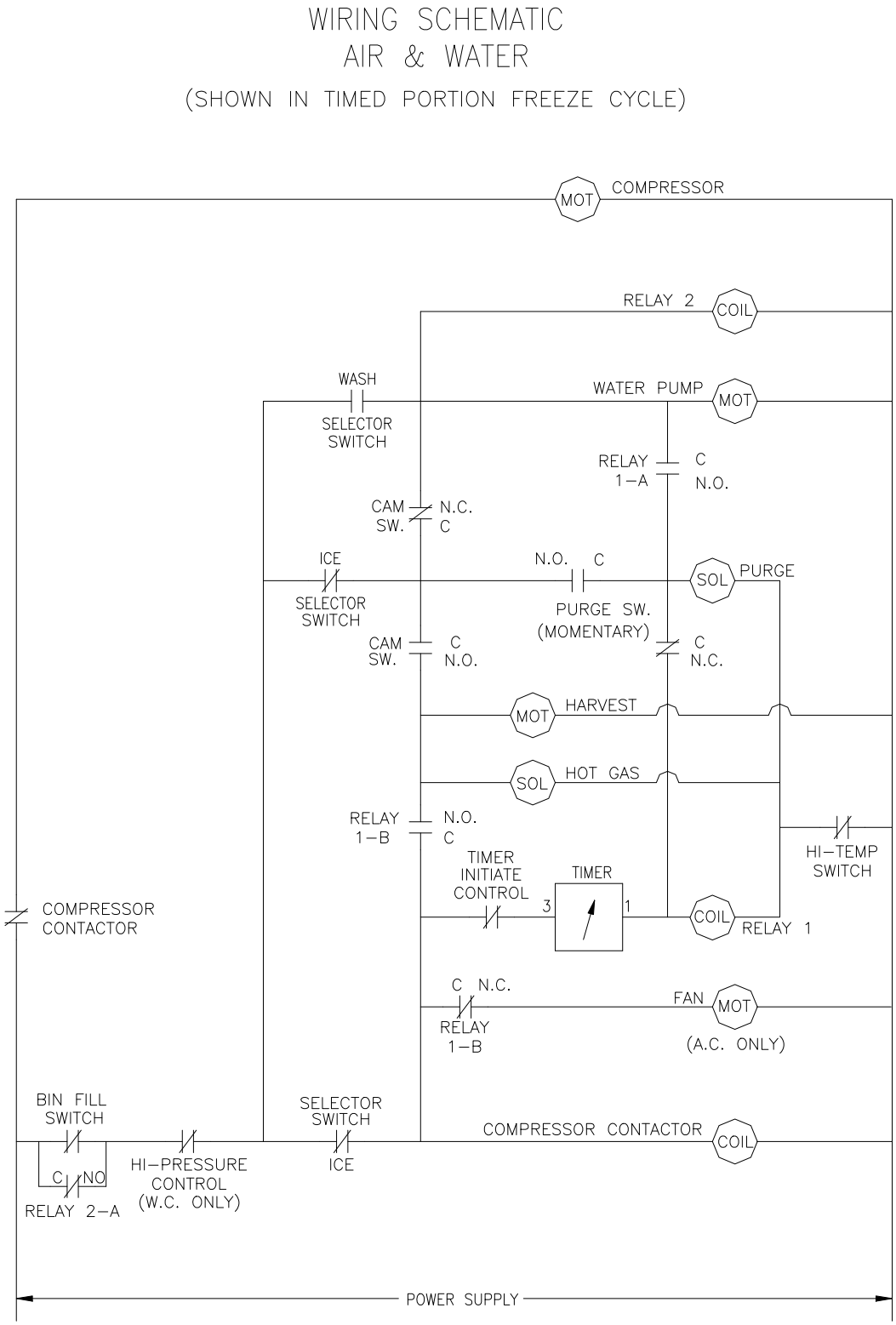

ICE0605/0606/0805/0806/1005/1006 Remote Wiring Diagram

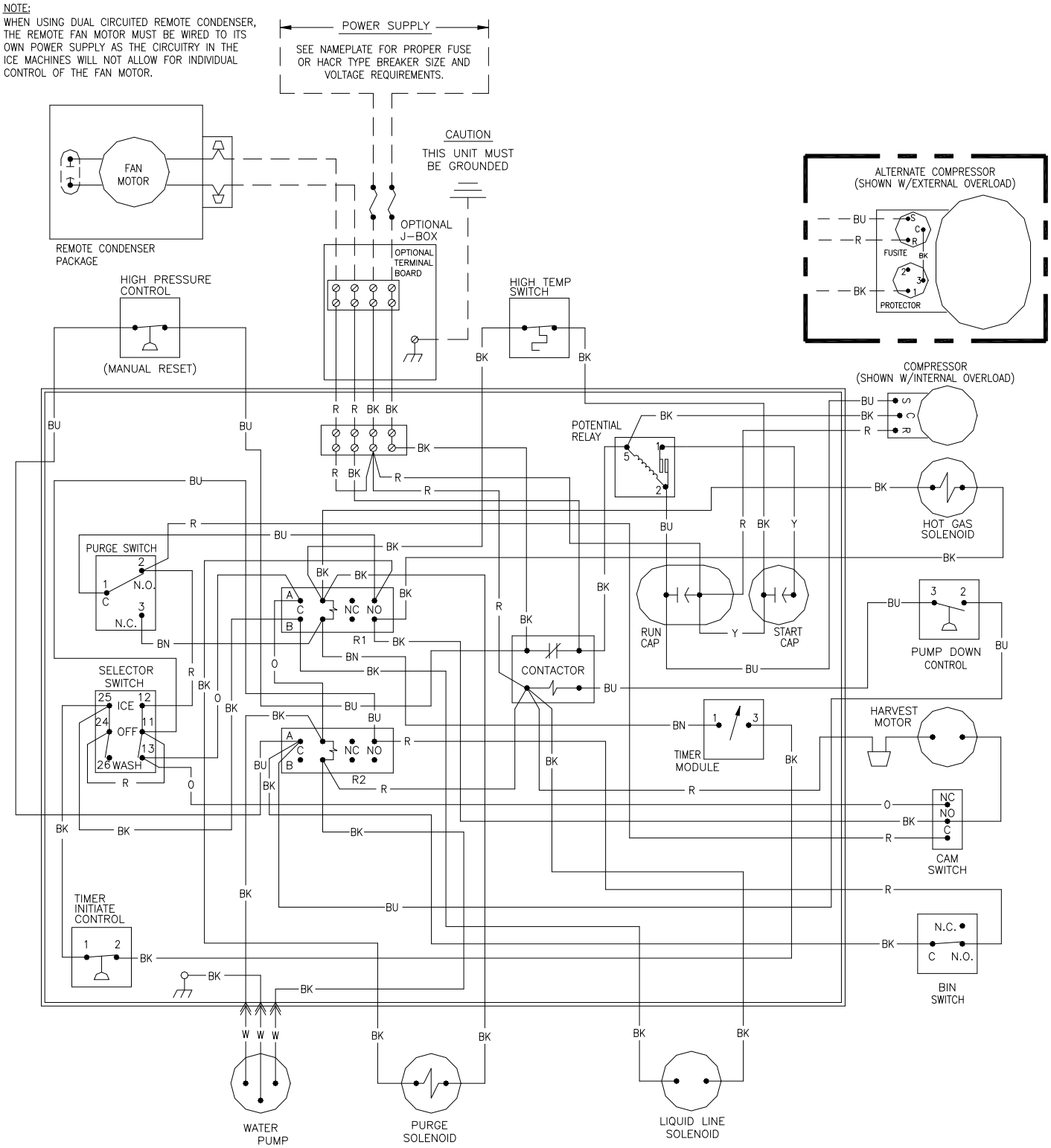

ICE0605/0606/0805/0806/1005/1006 Remote Wiring Schematic

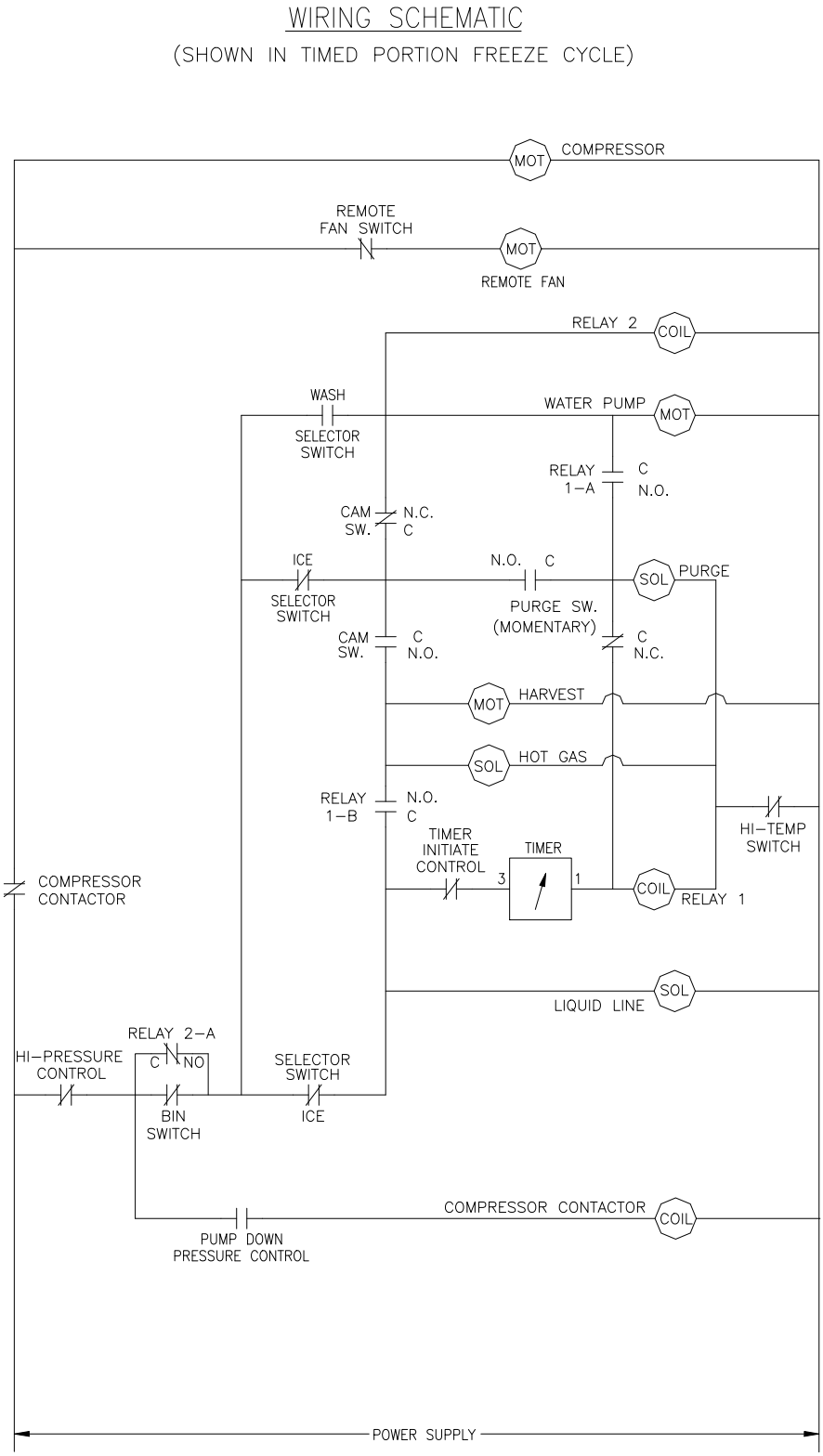

ICE1007 Air and Water Wiring Diagram

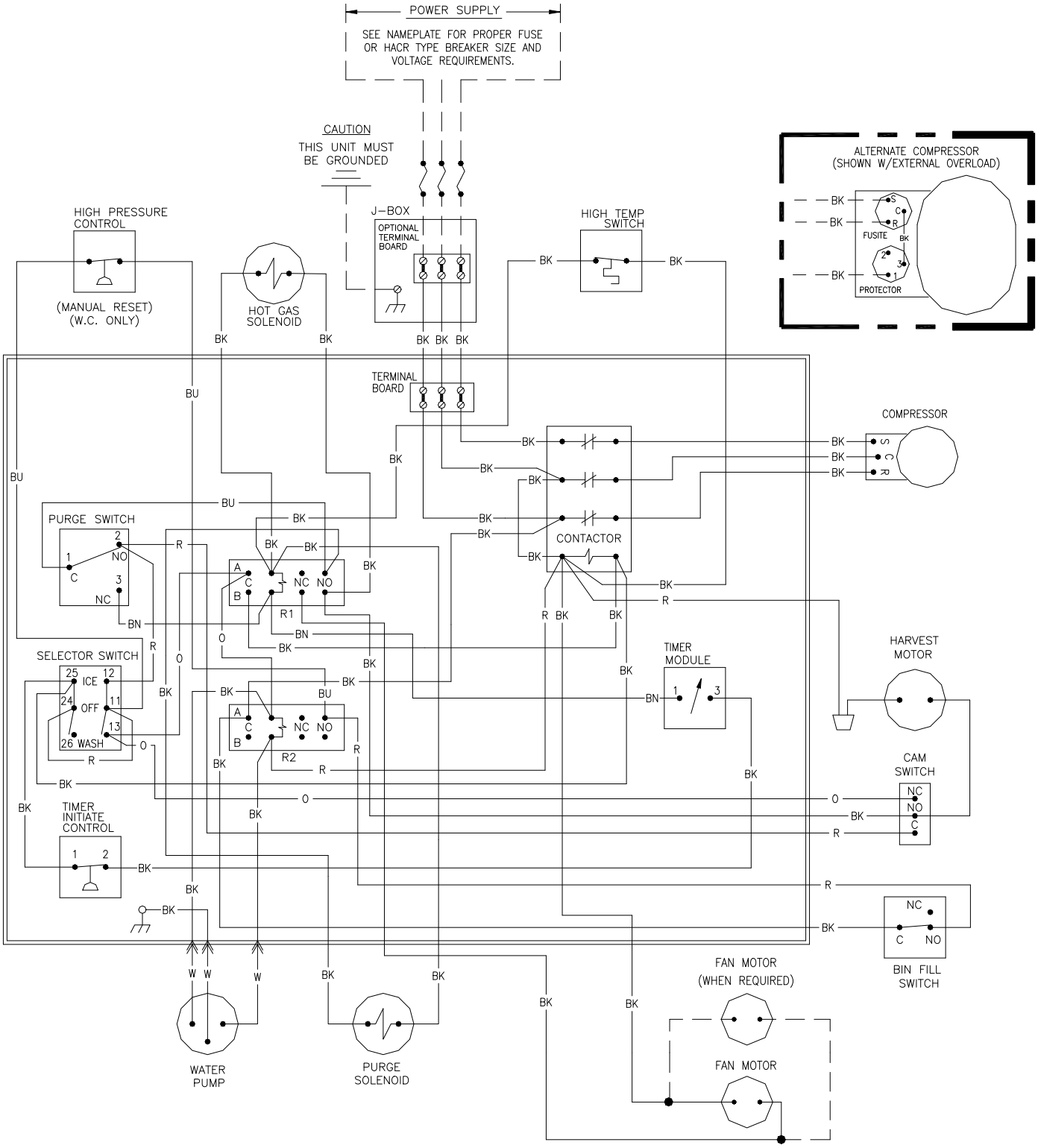

ICE1007 Air and Water Wiring Schematic

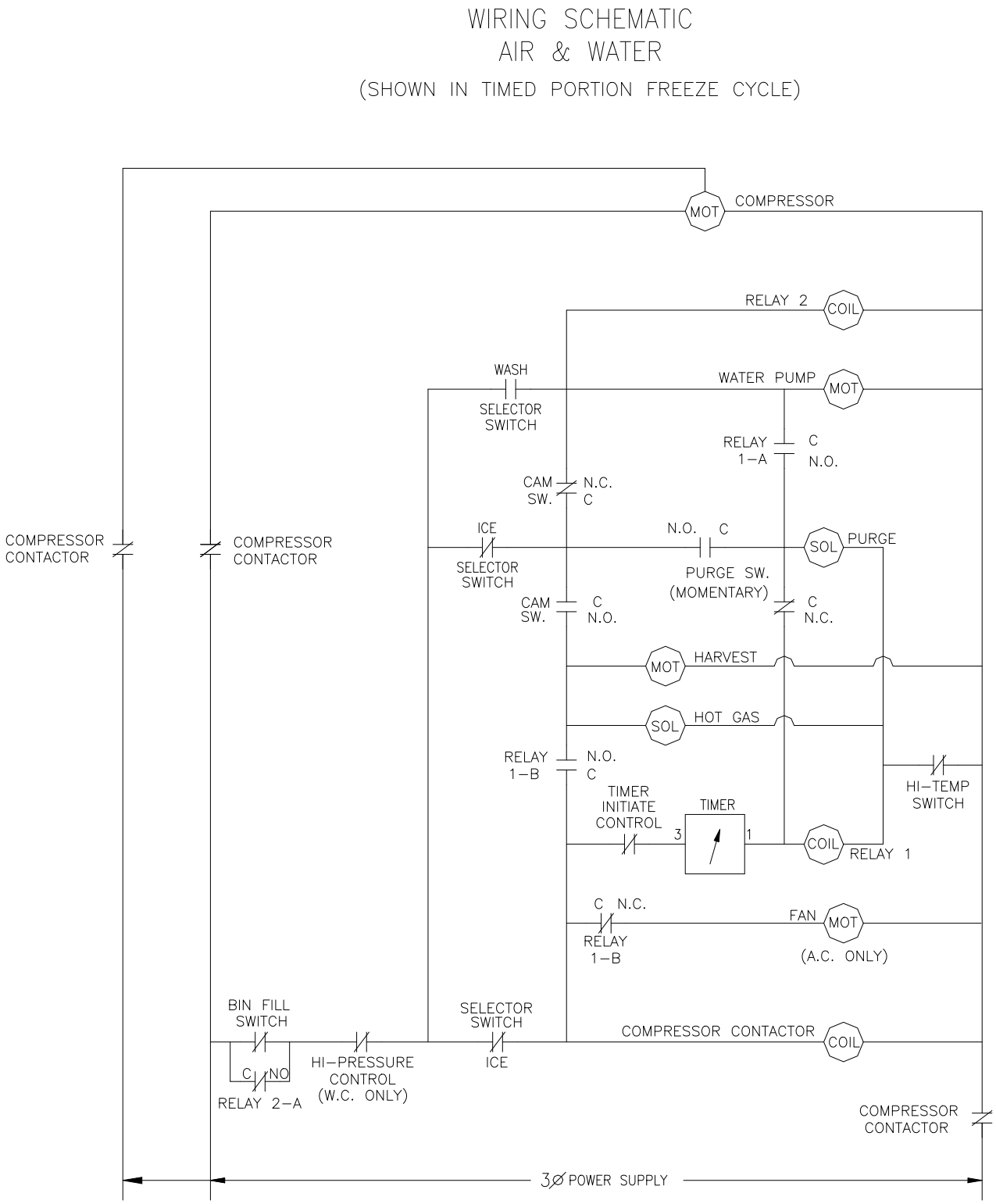

ICE1007 Remote Wiring Diagram

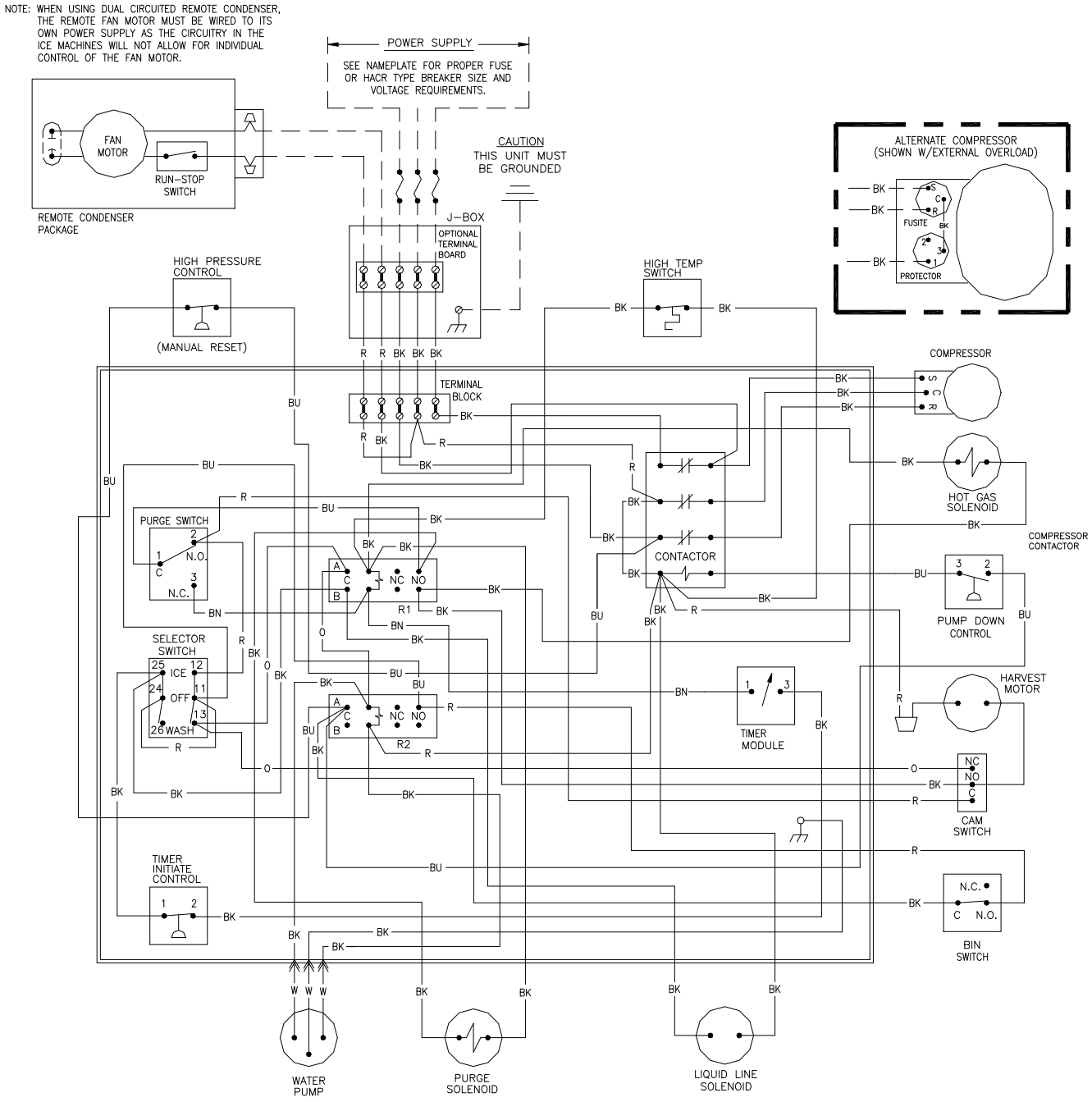

ICE1007 Remote Wiring Schematic

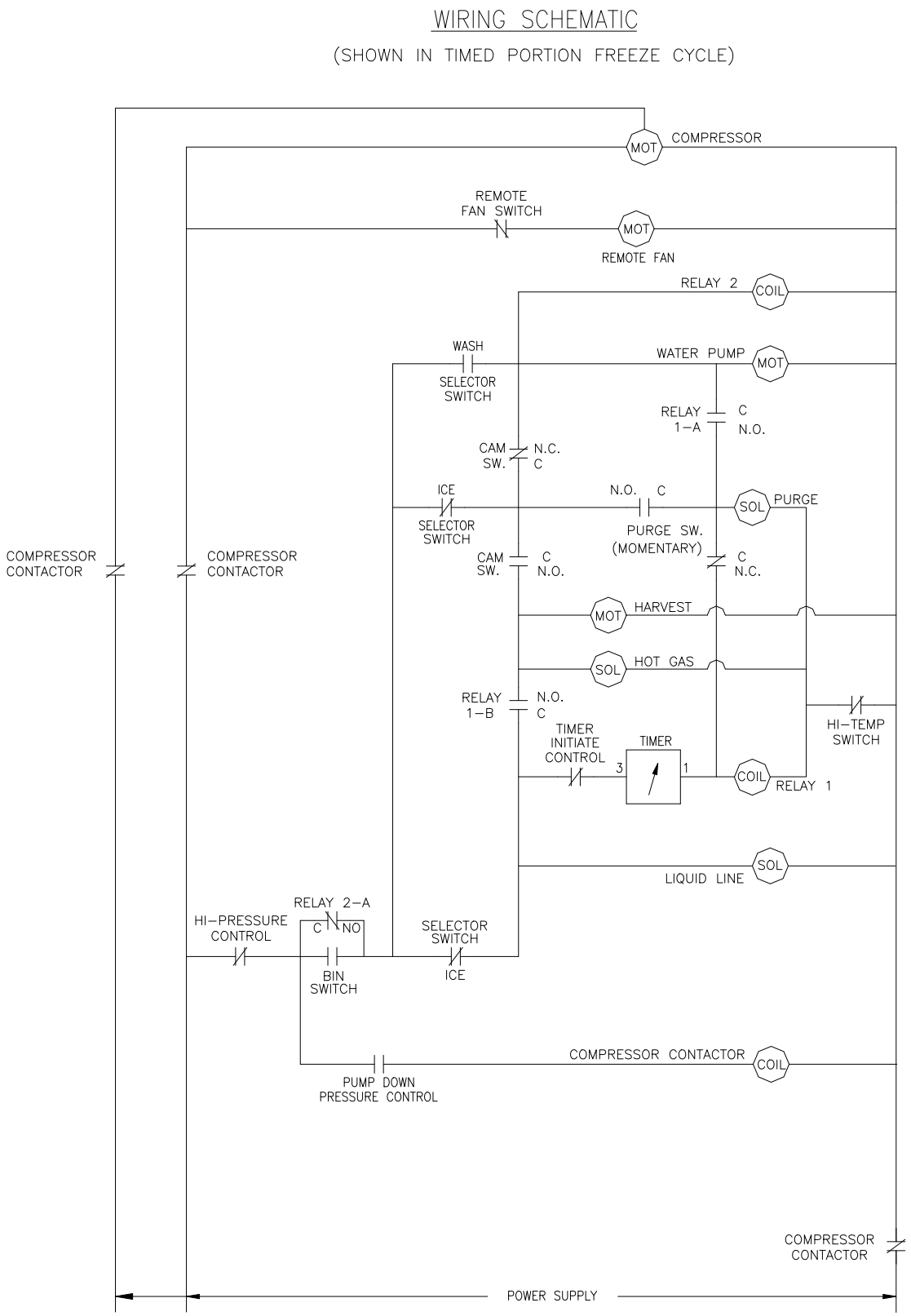

ICE1405/1406/1806/2005/2106 Air and Water Wiring Diagram

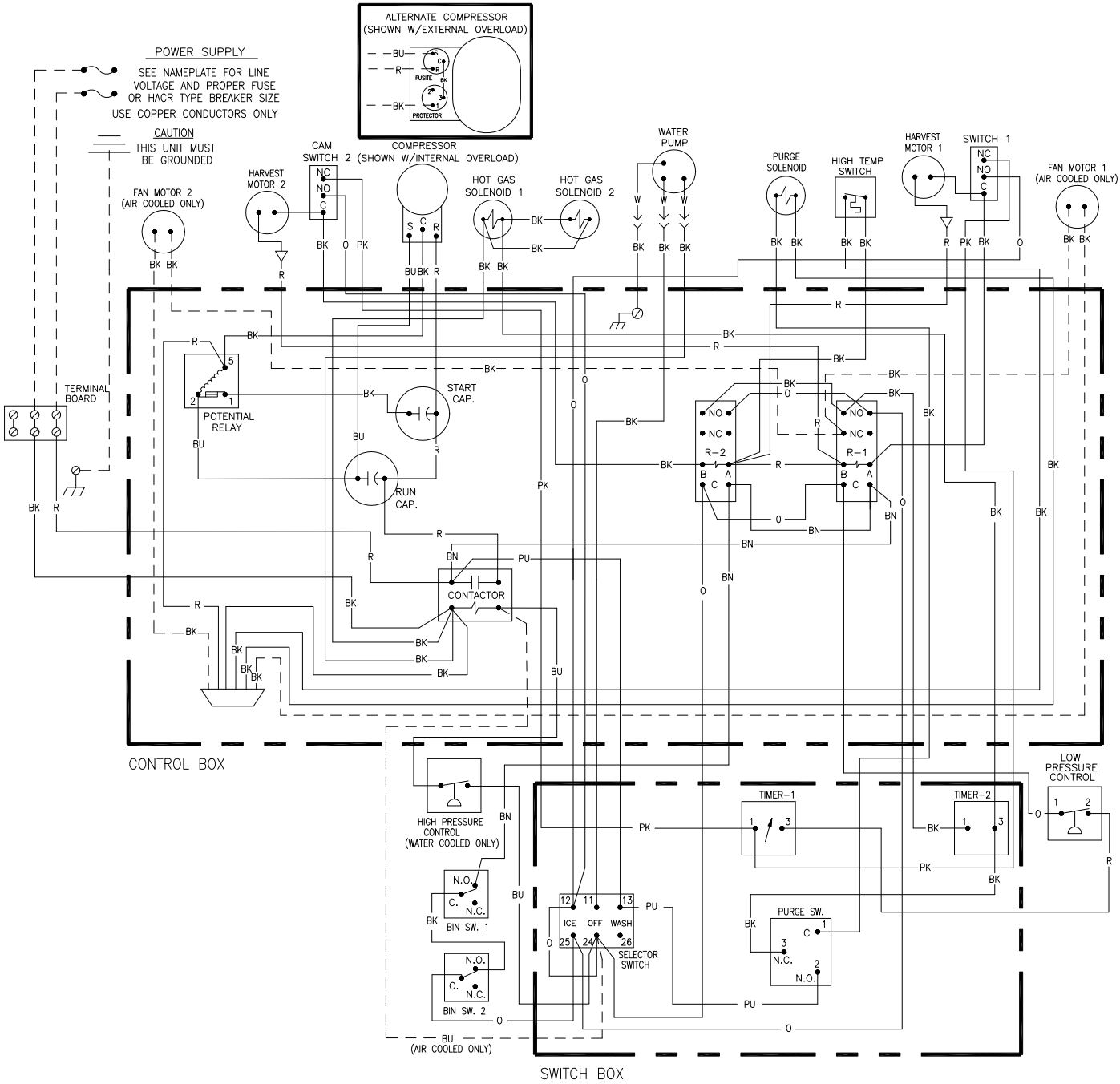

ICE1405/1406/1806/2005/2106 Air and Water Wiring Schematic

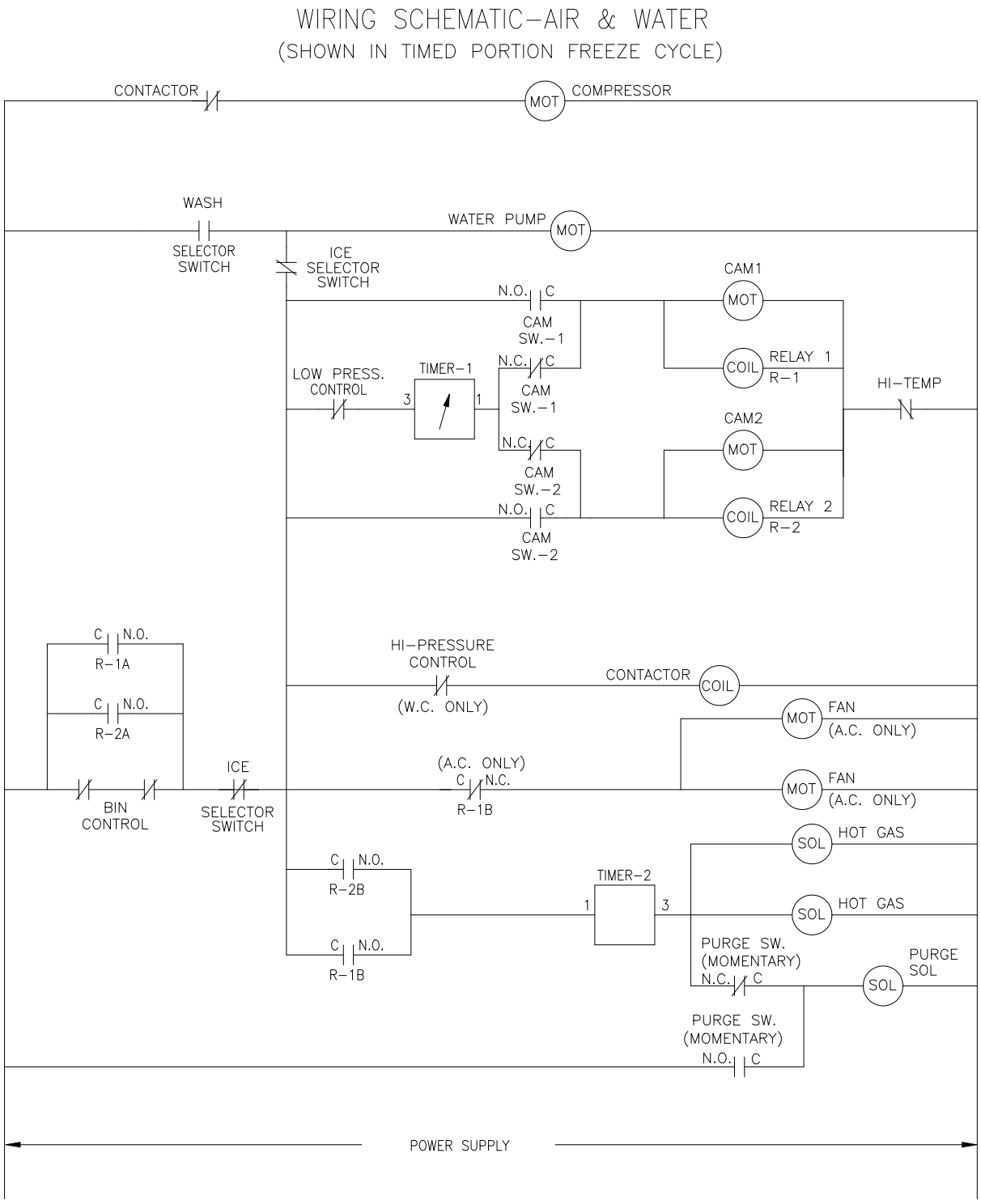

ICE1405/1406/1806/2005/2106 Remote Wiring Diagram

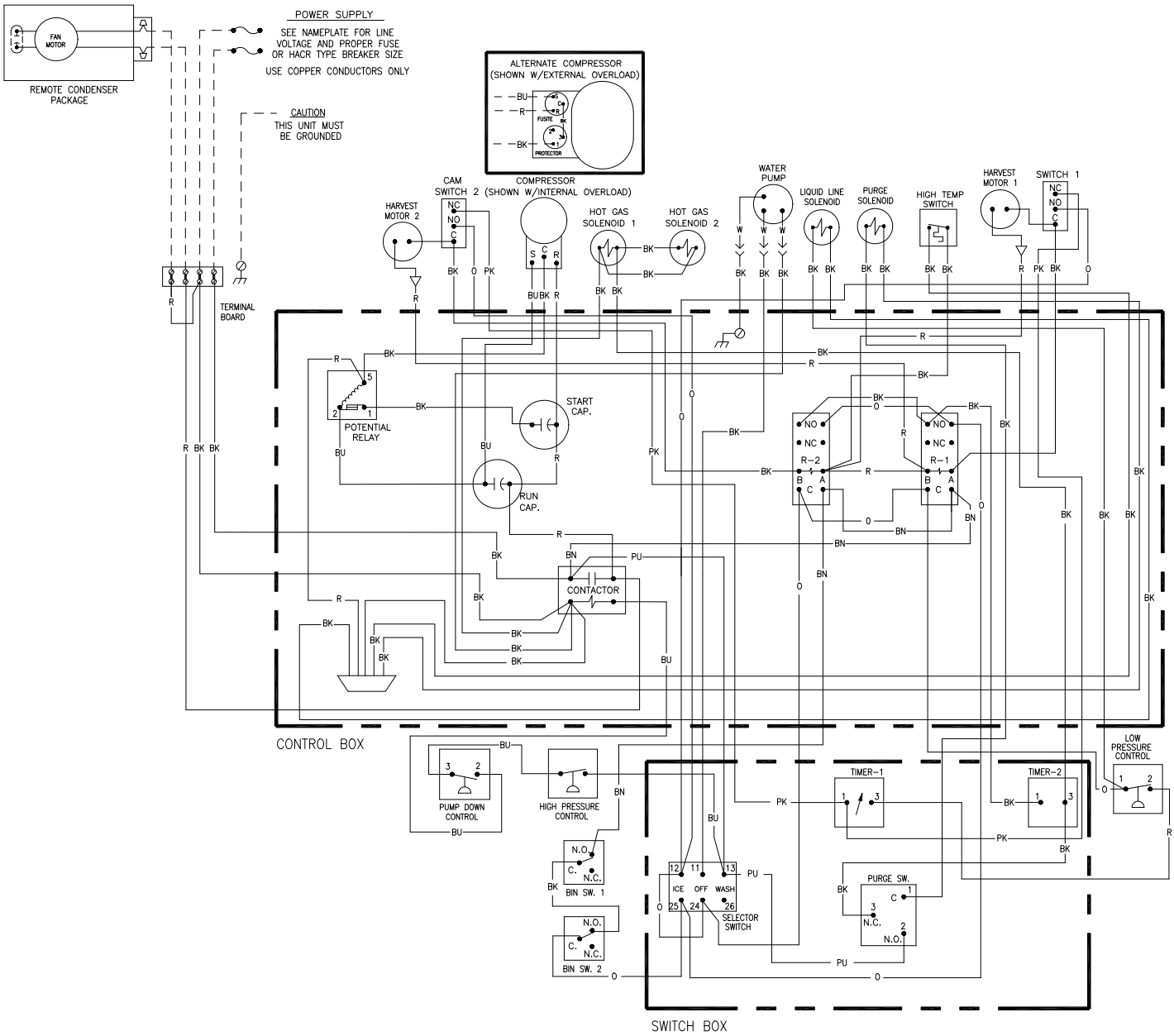

ICE1405/1406/1806/2005/2106 Remote Wiring Schematic

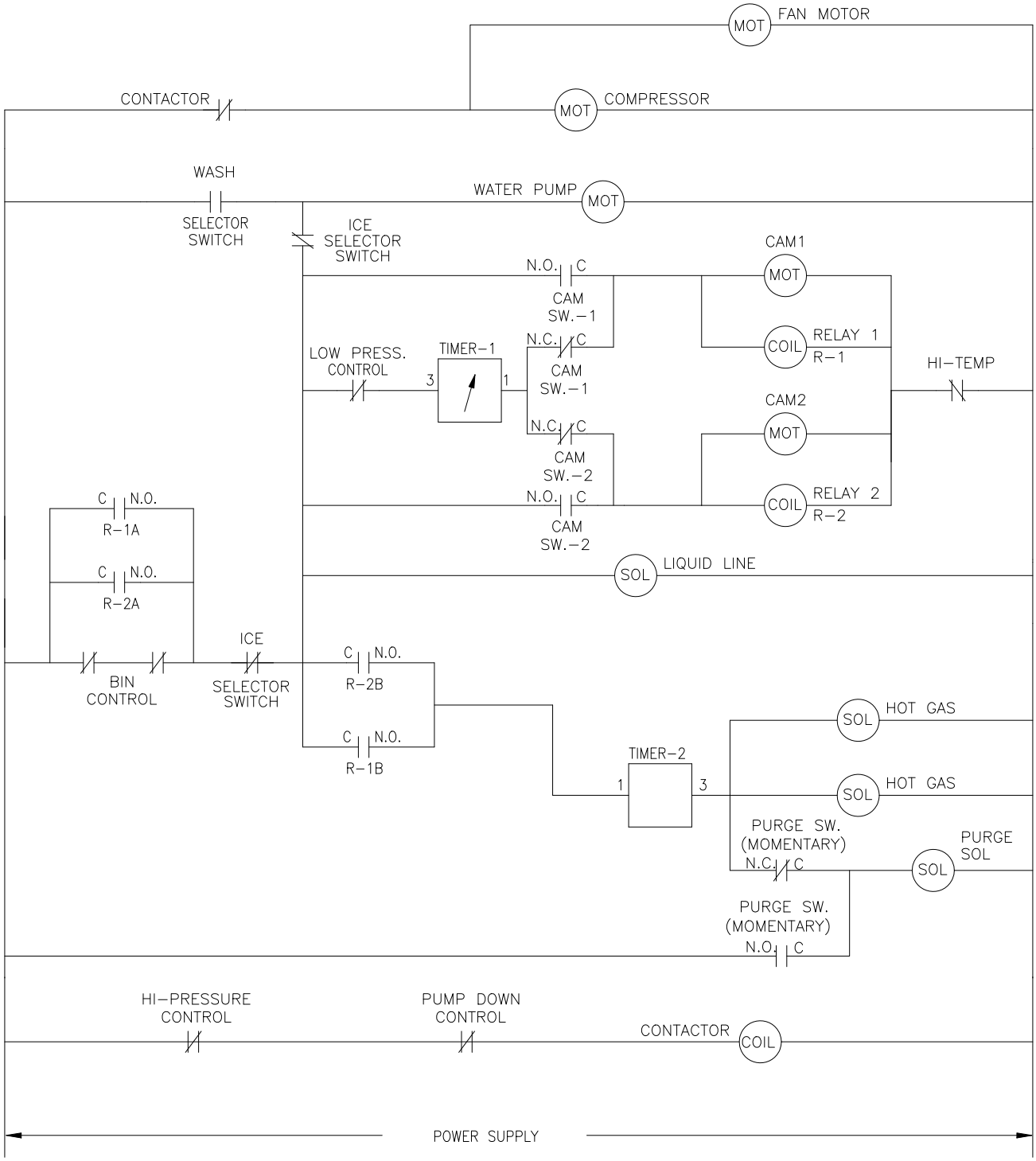

ICE1407/1807/2107 Air and Water Wiring Diagram

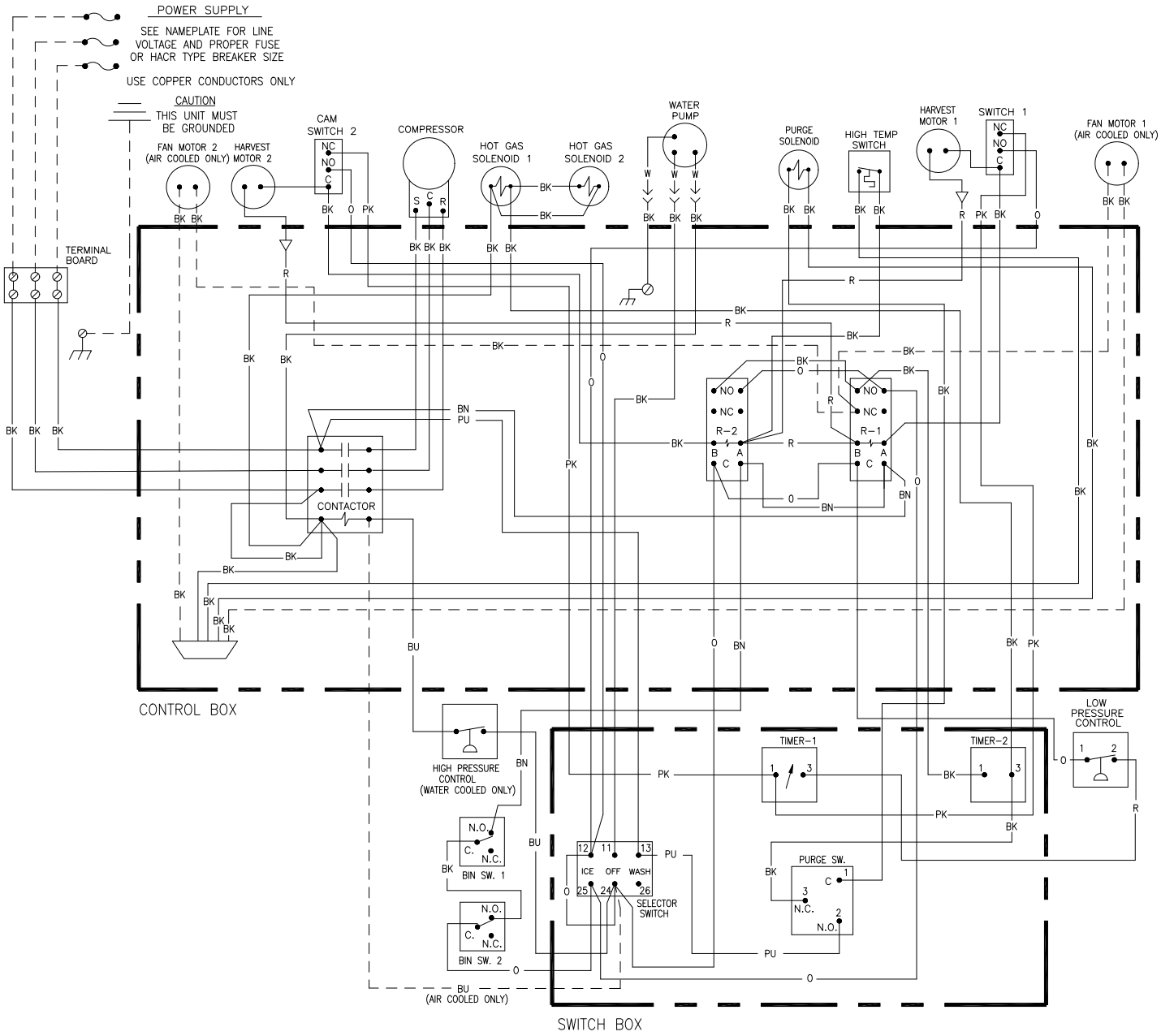

ICE1407/1807/2107 Air and Water Wiring Schematic

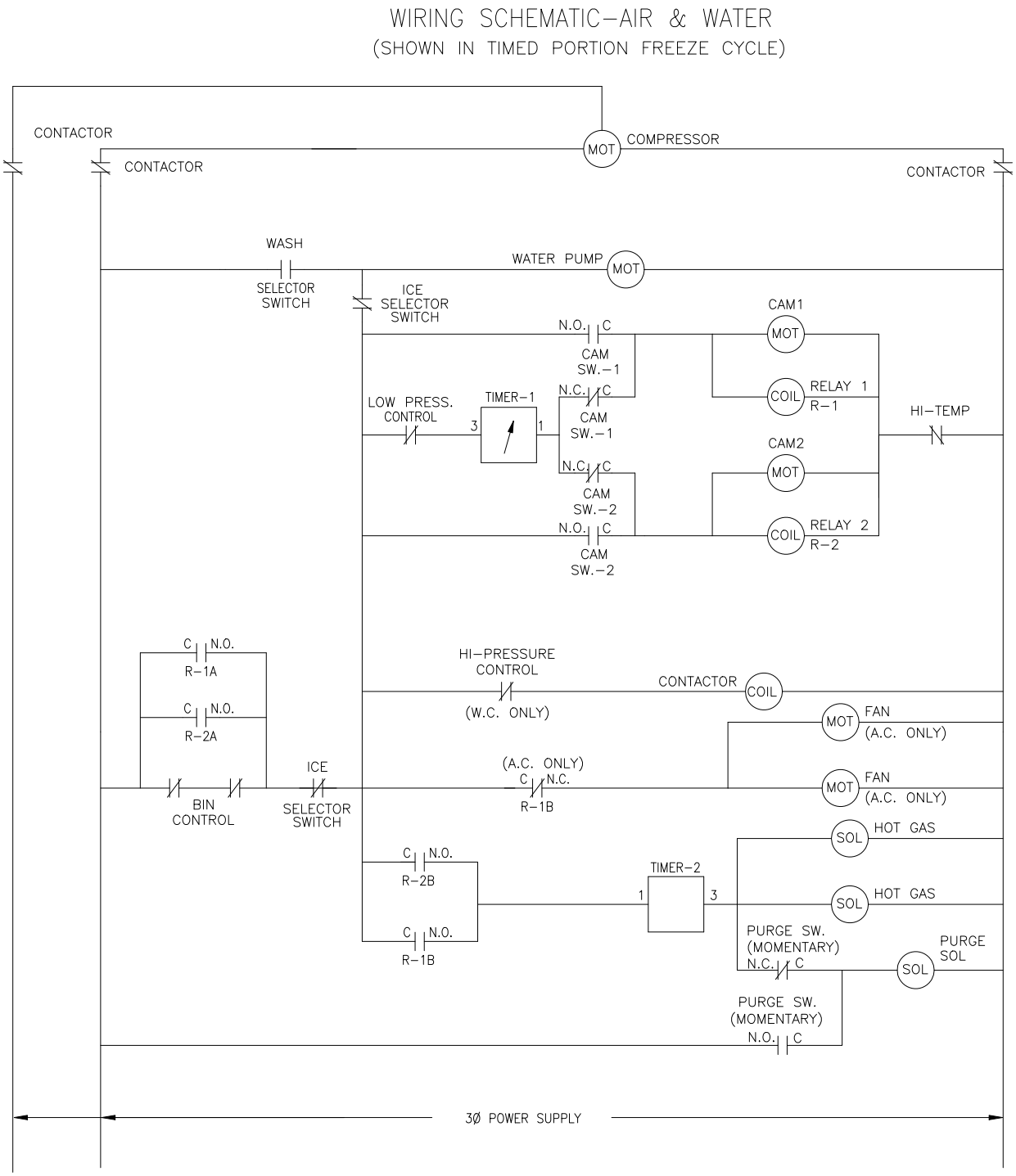

ICE1407/1807/2107 Remote Wiring Diagram

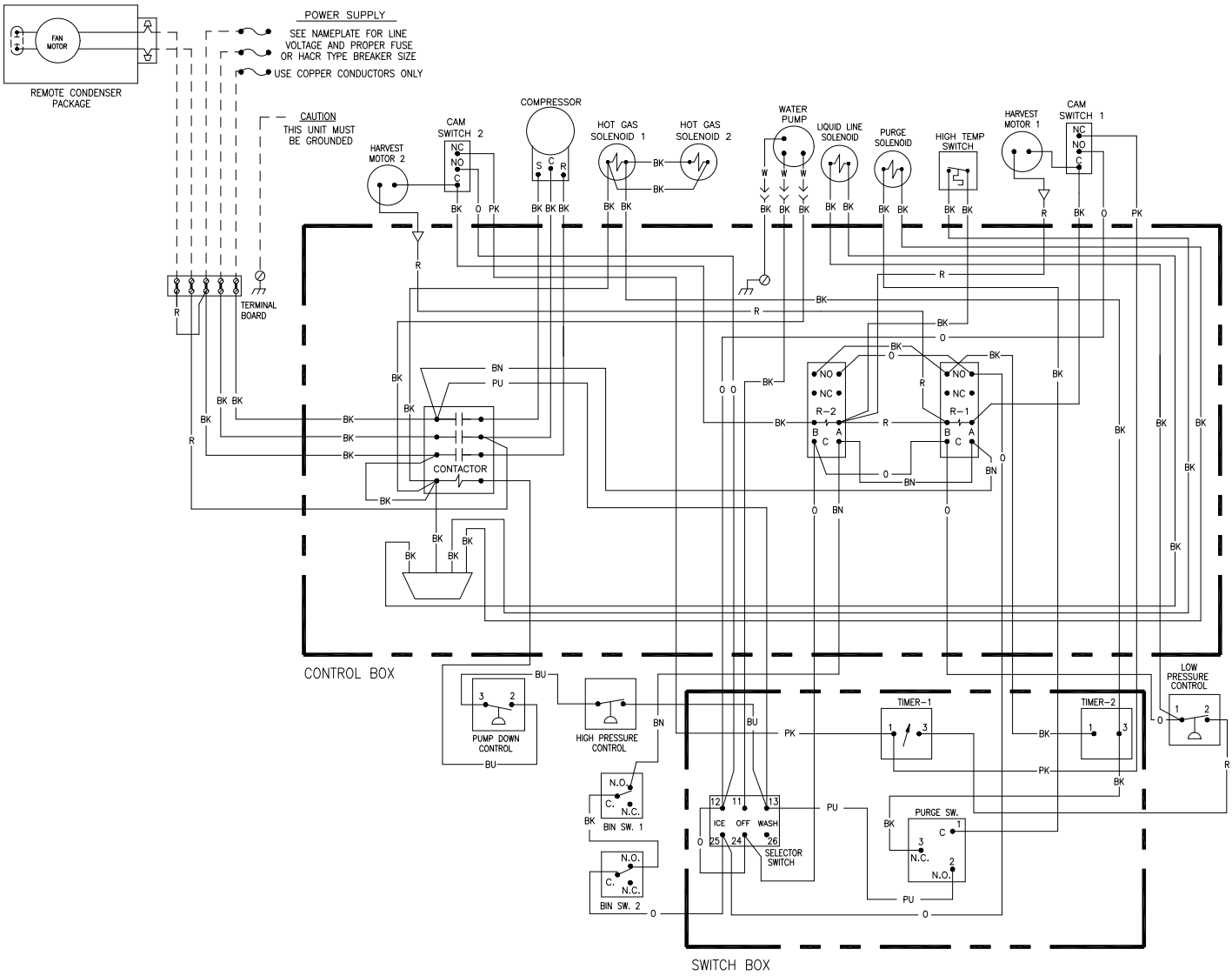

ICE1407/1807/2107 Remote Wiring Schematic

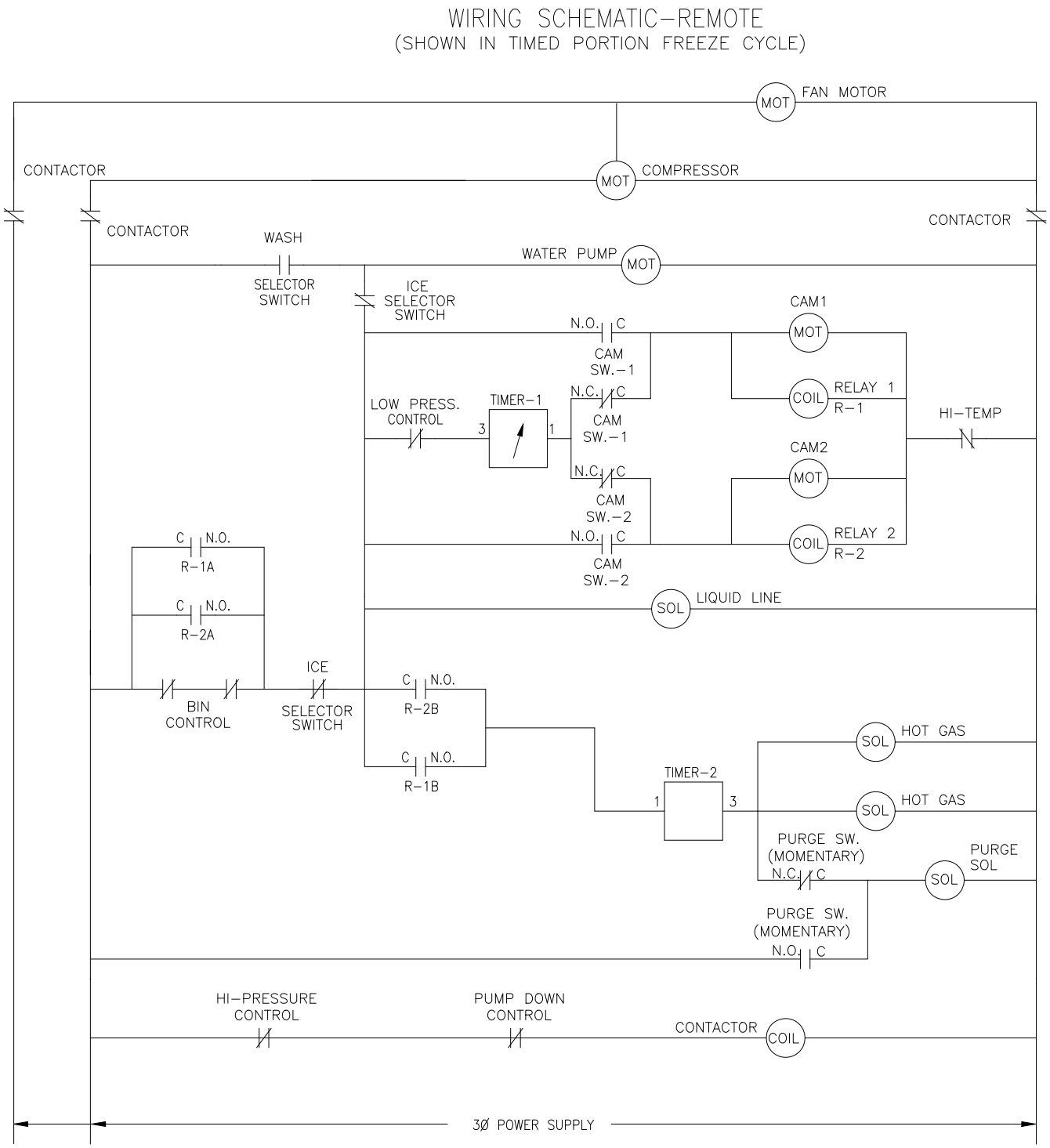

ICE1606 Remote Wiring Diagram

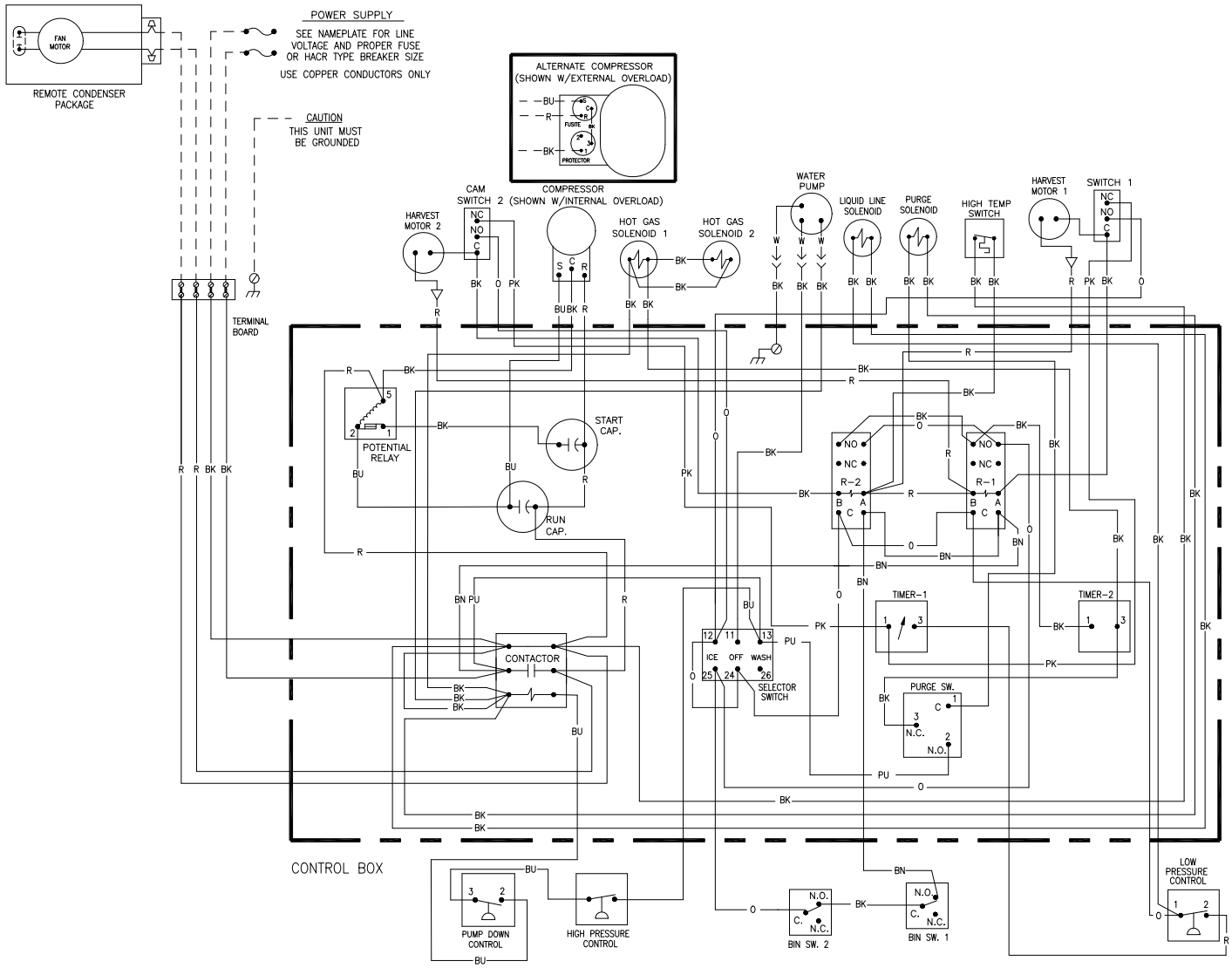

ICE1606 Remote Wiring Schematic

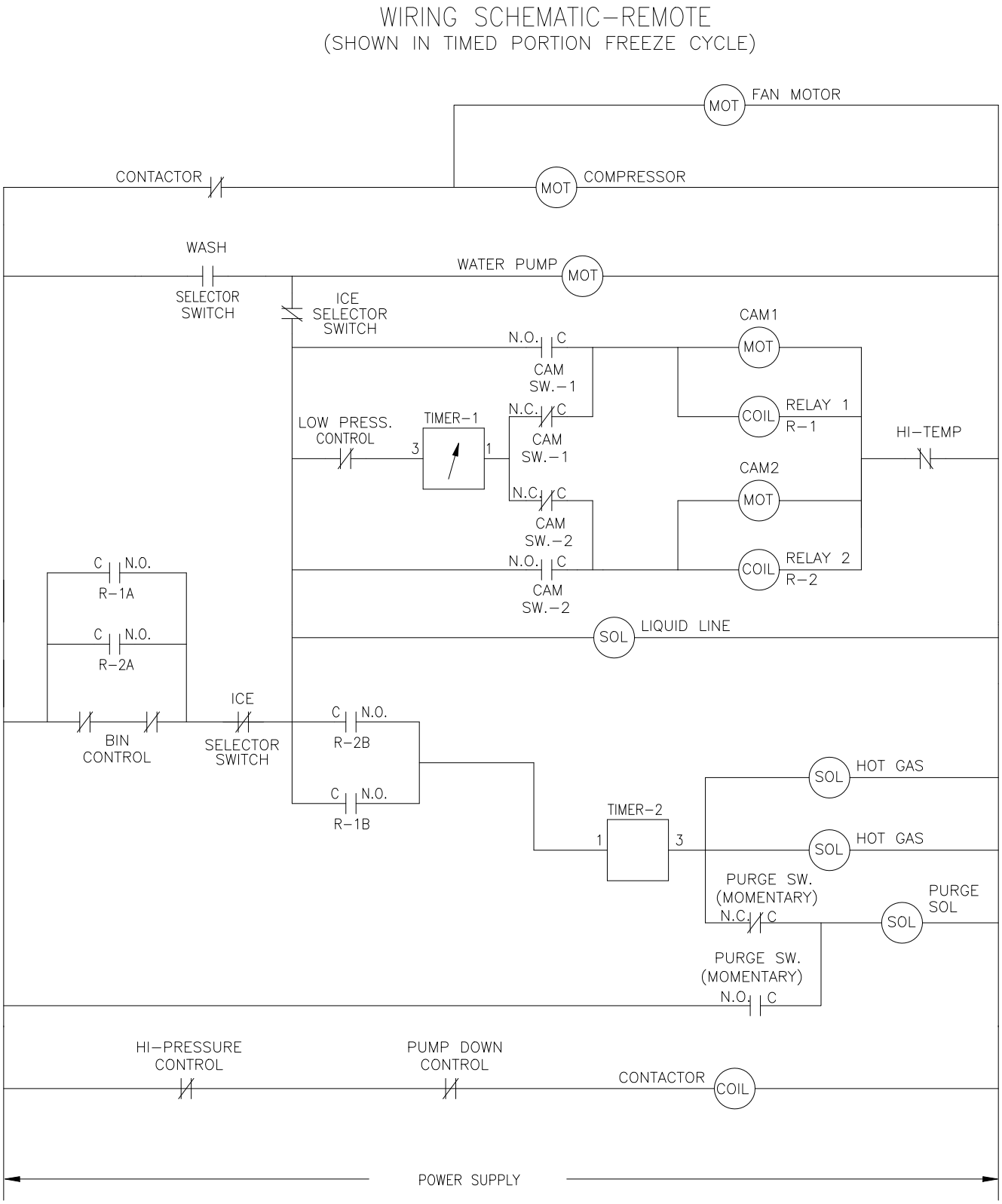

ICE0320 Air and Water Wiring Diagram

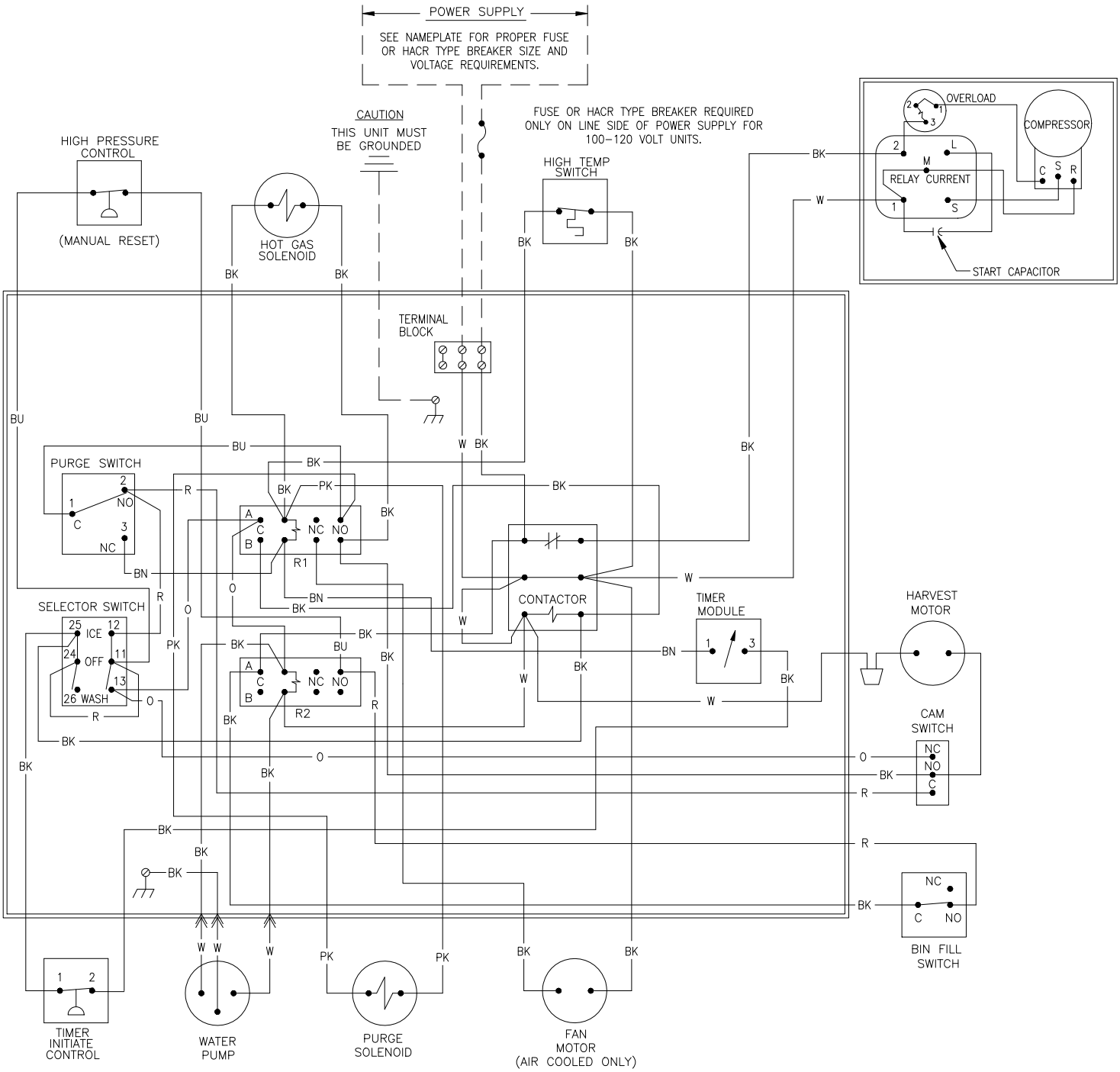

ICE0320 Air and Water Wiring Schematic

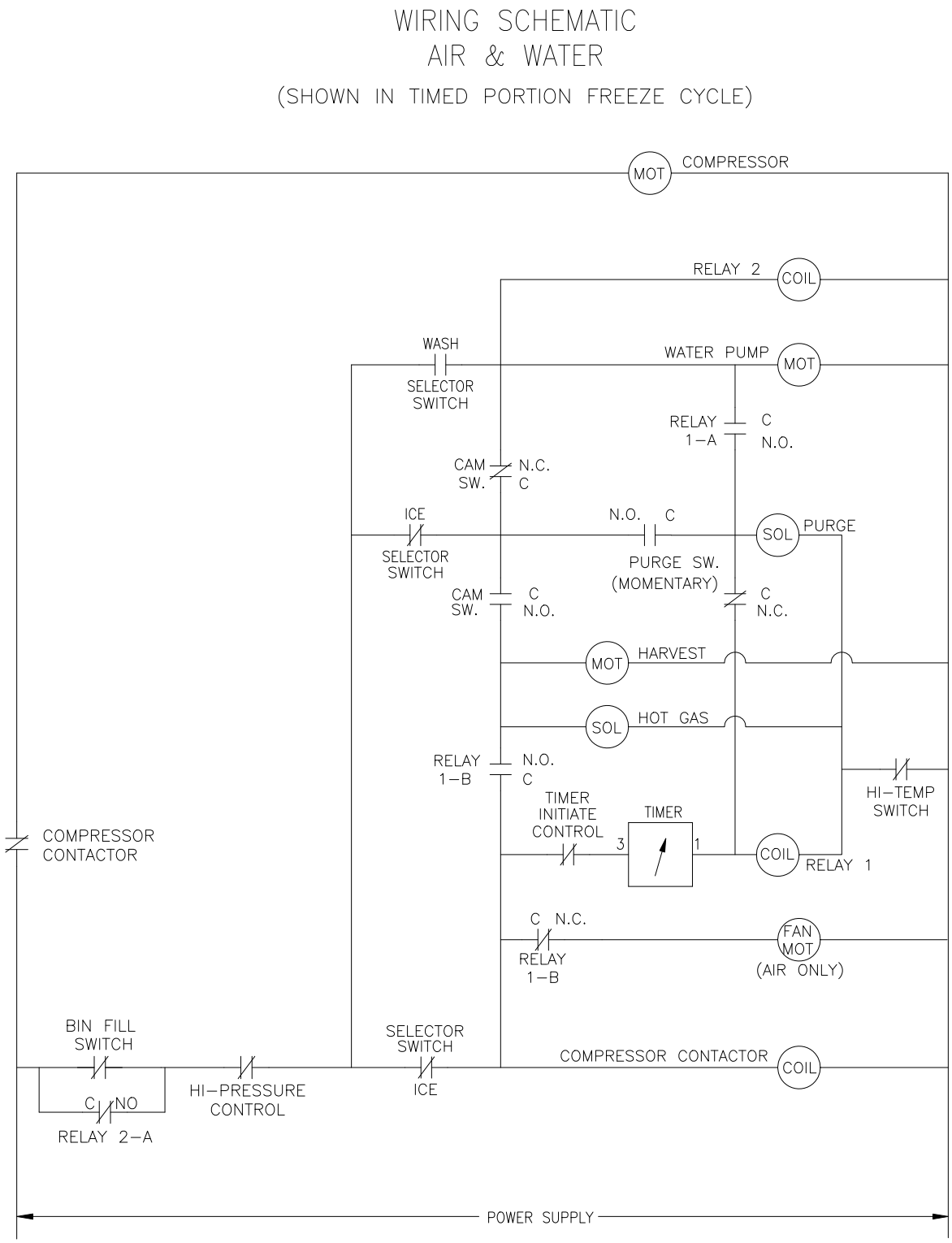

ICE0520 Air and Water Wiring Diagram

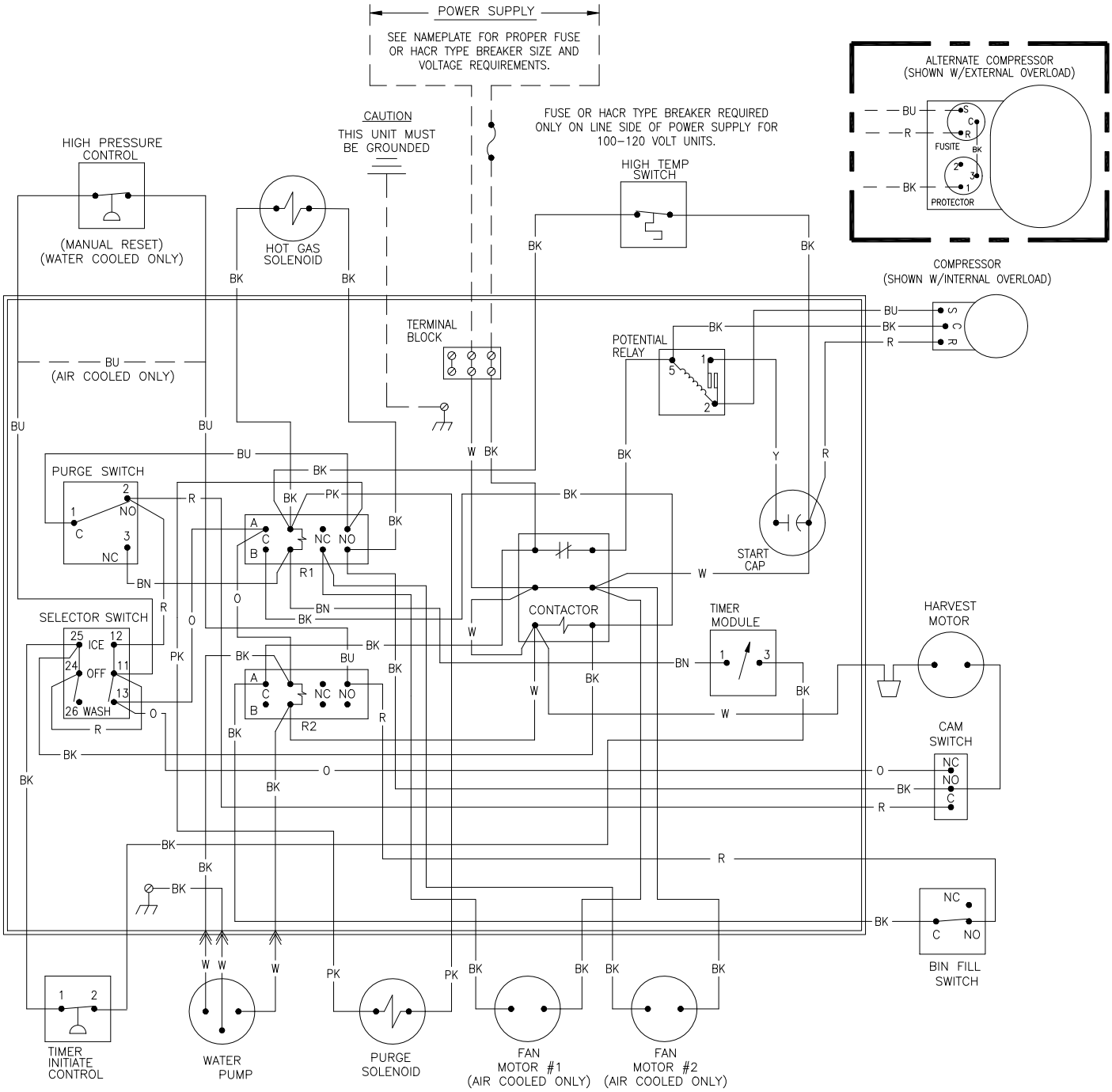

ICE0520 Air and Water Wiring Schematic

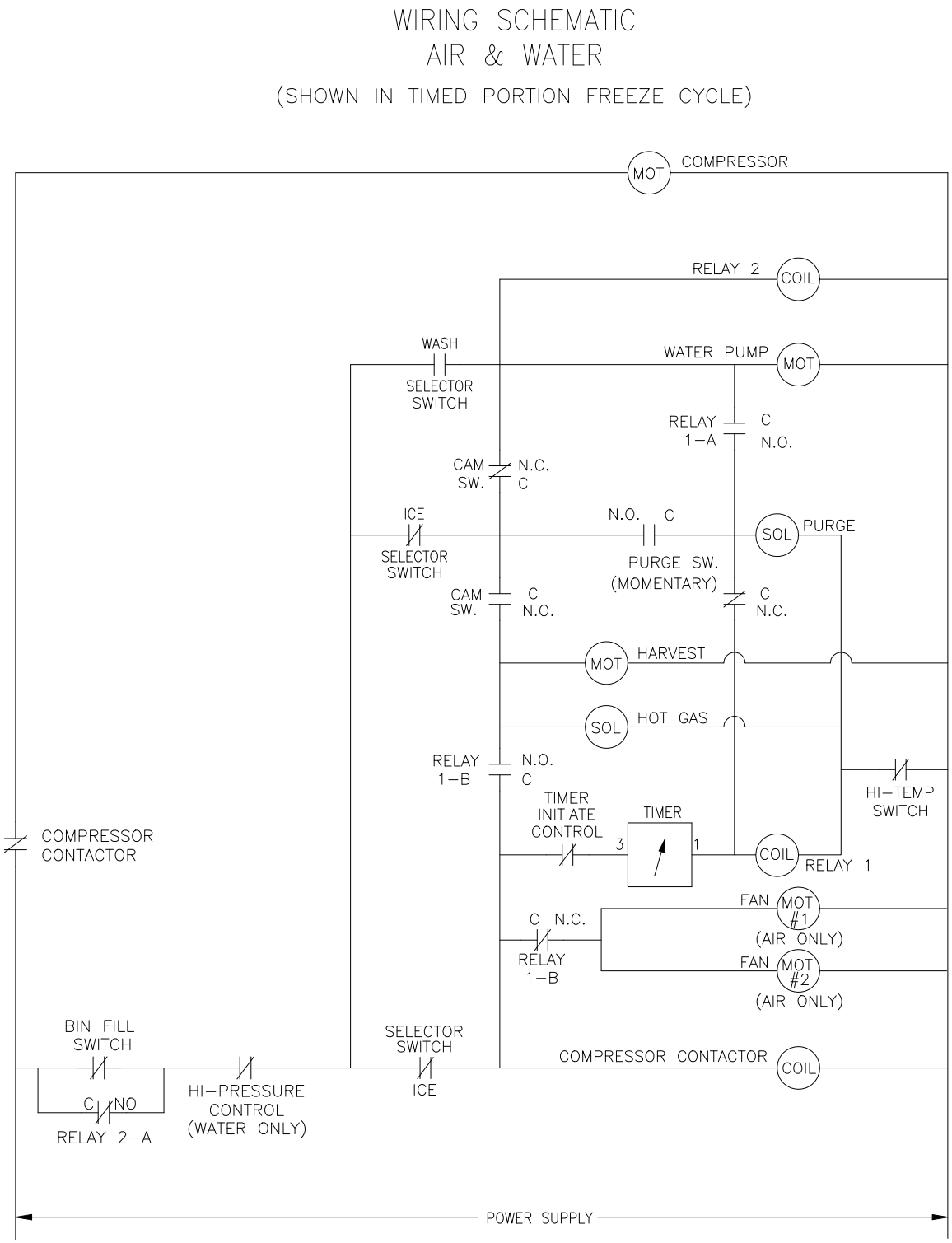

ICE0325/0525 Air and Water Wiring Diagram

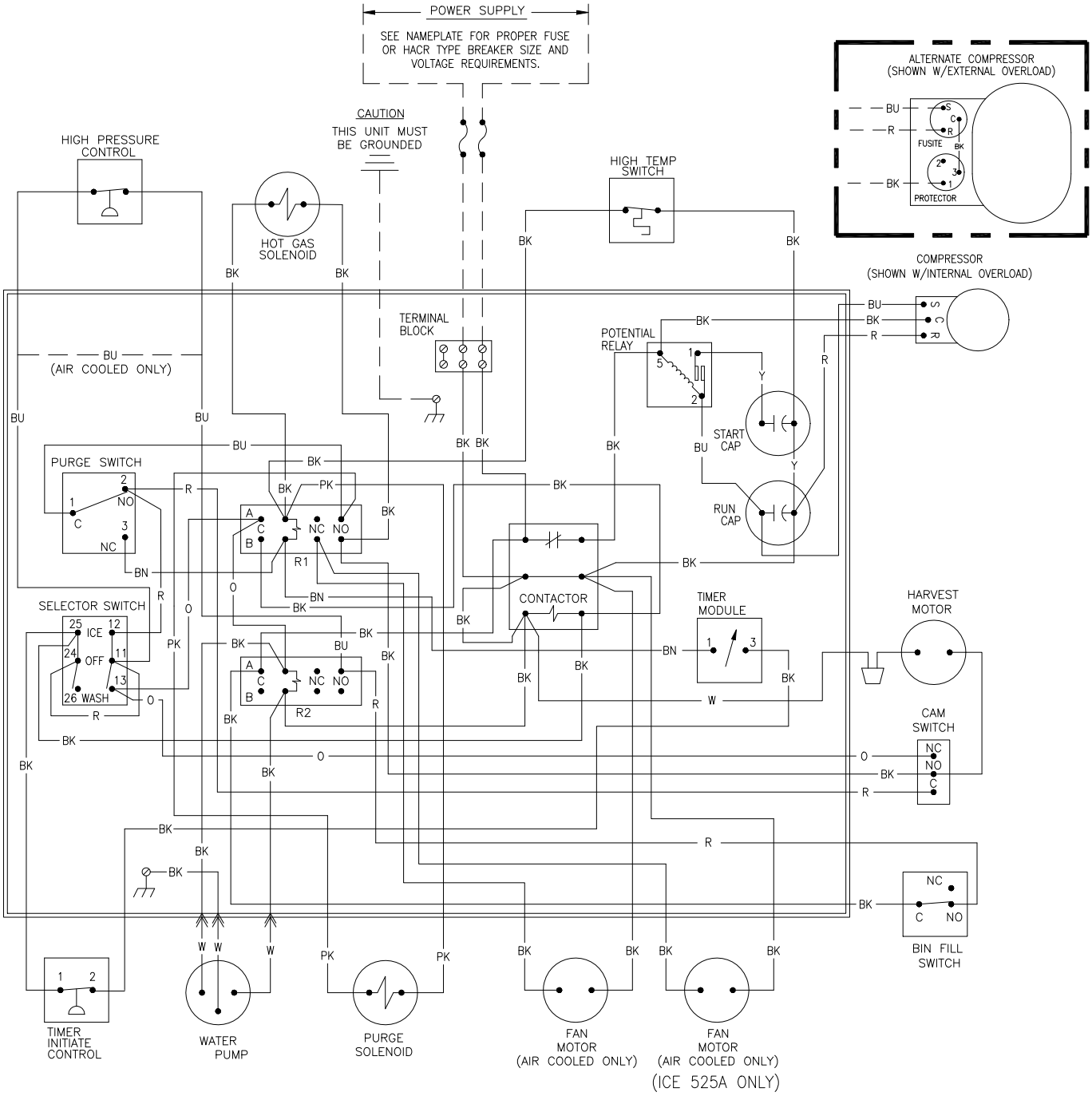

ICE0325/0525 Air and Water Wiring Schematic

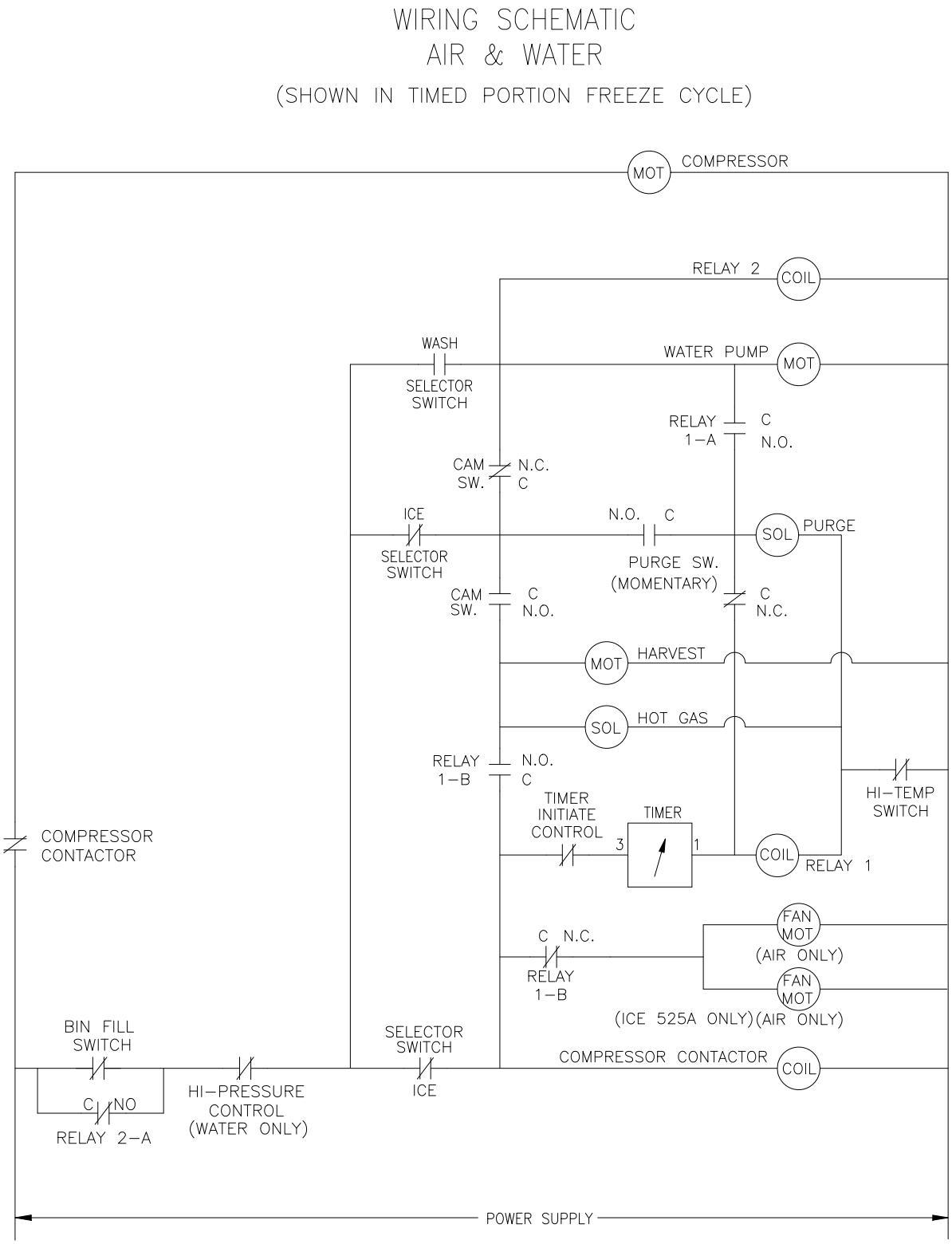

ICE0305 Air and Water Wiring Diagram

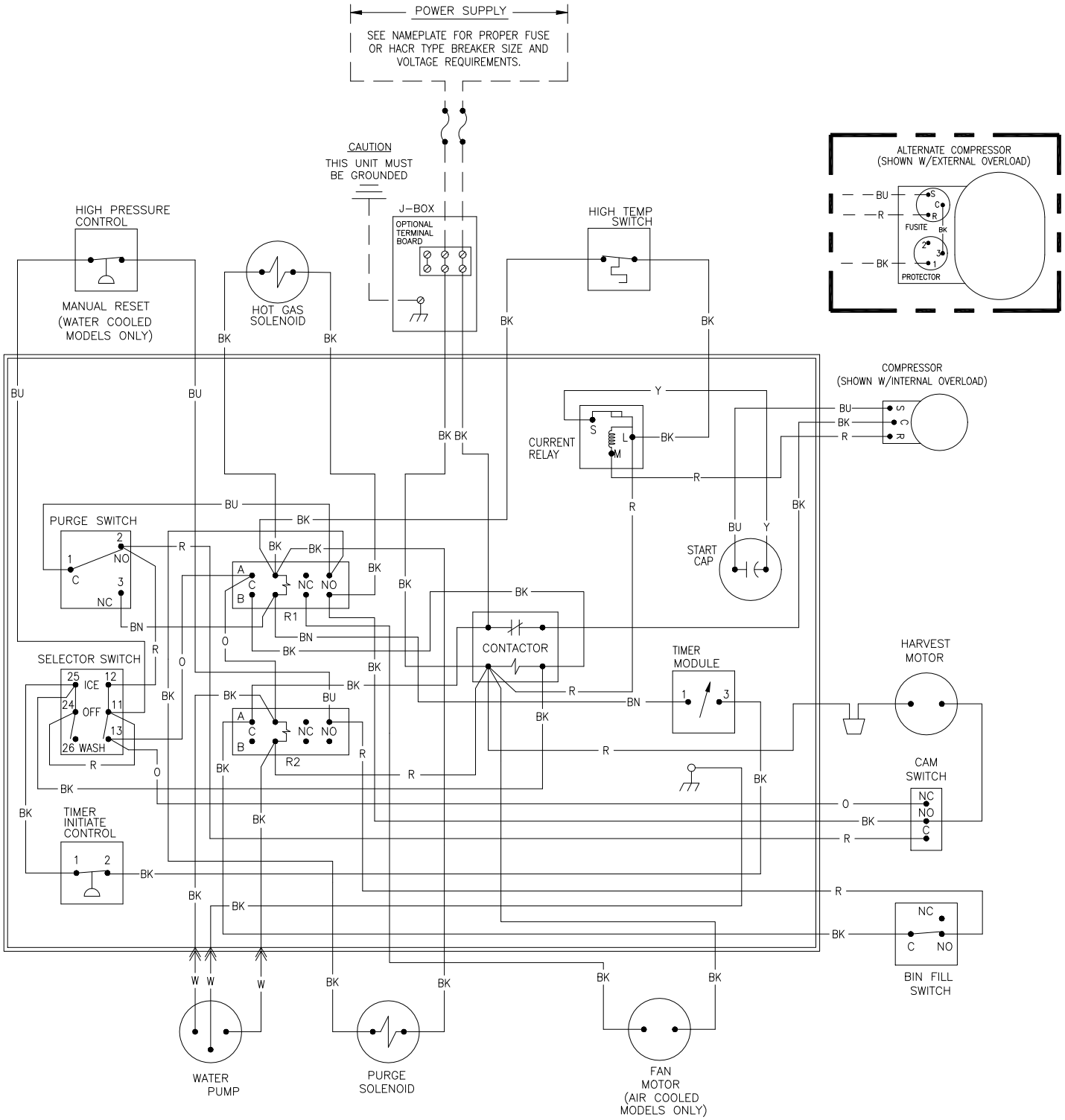

ICE0305 Air and Water Wiring Schematic

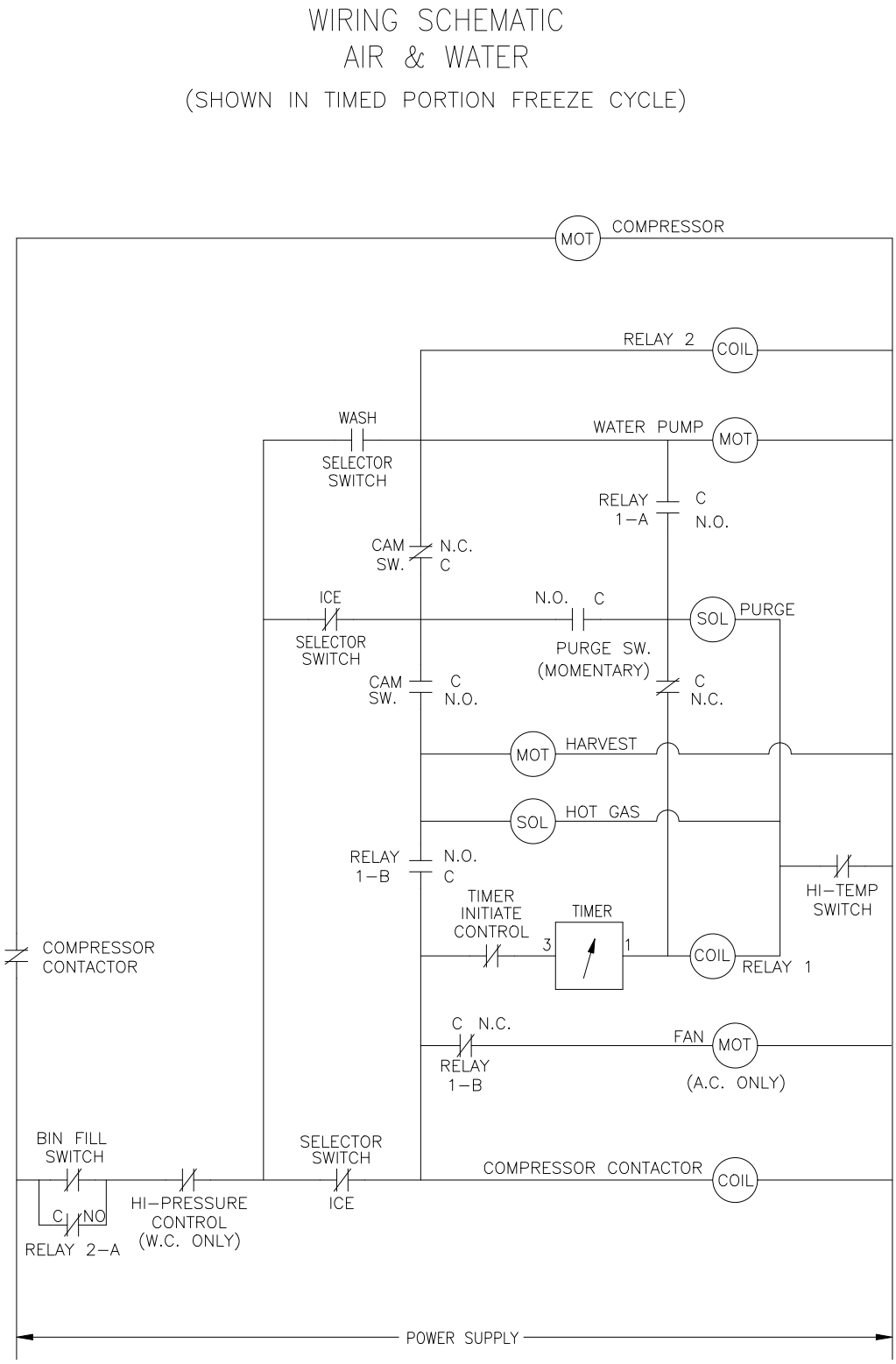

ICE1506 Remote

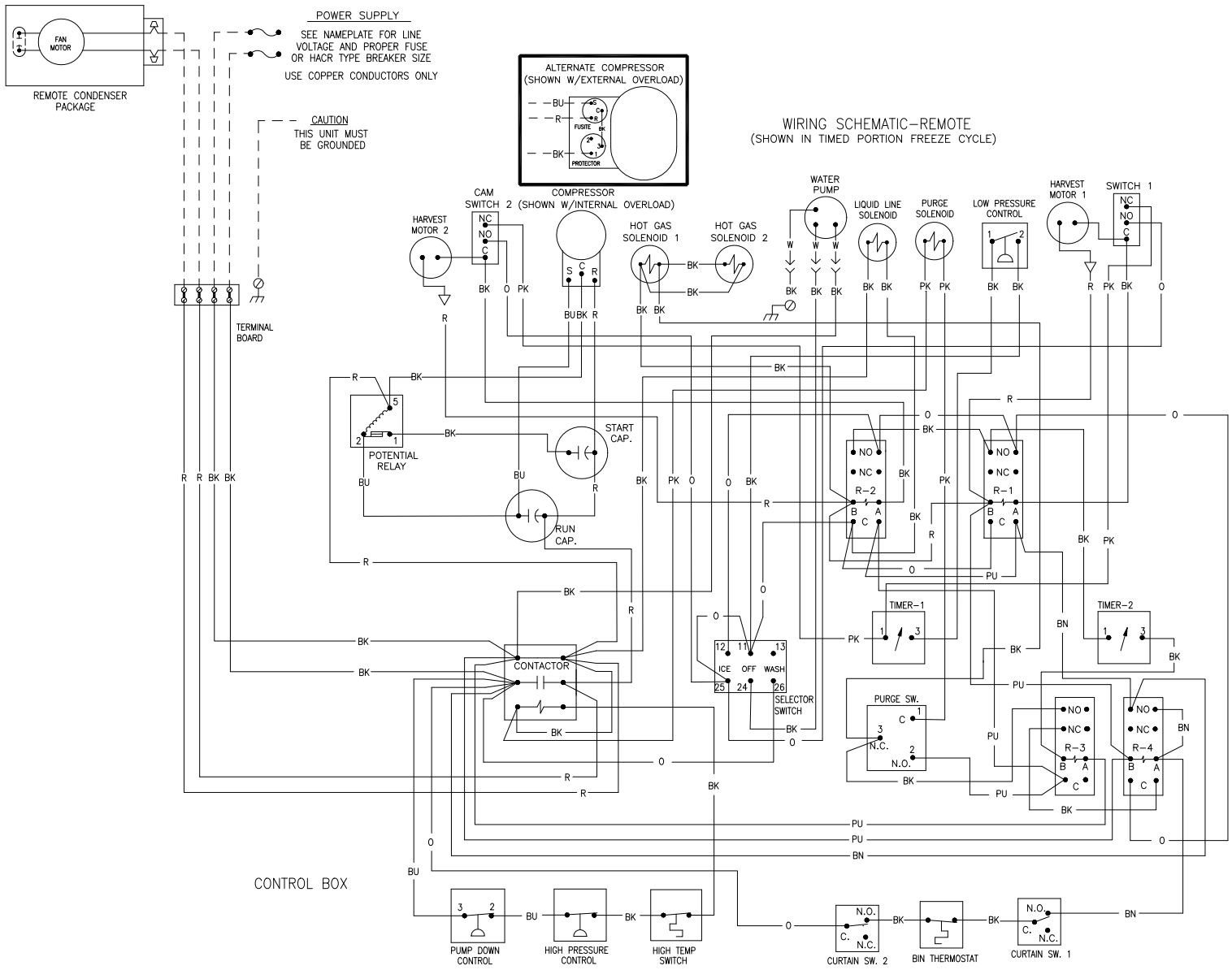

ICE1506 Remote

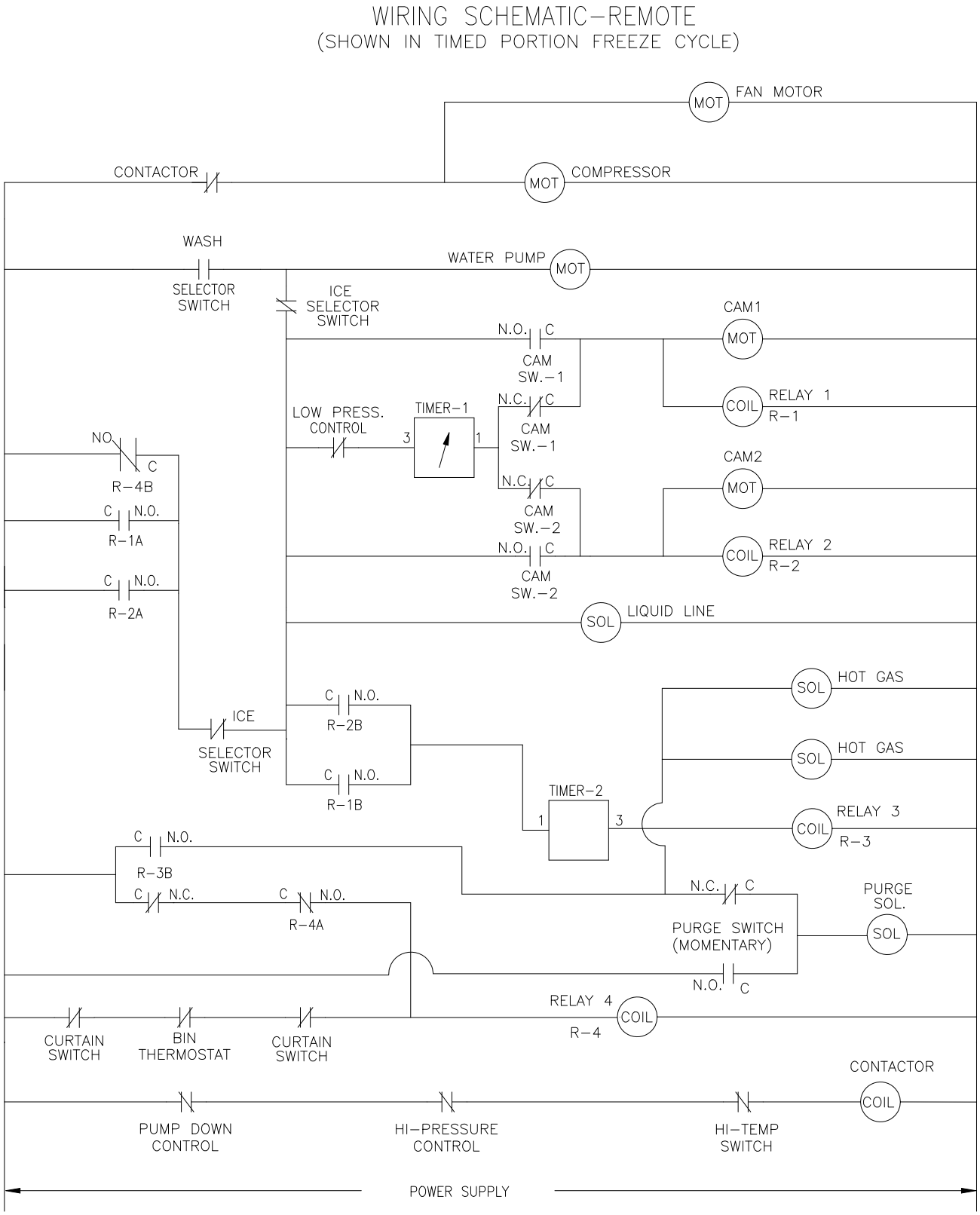

ICEU300 Air and Water

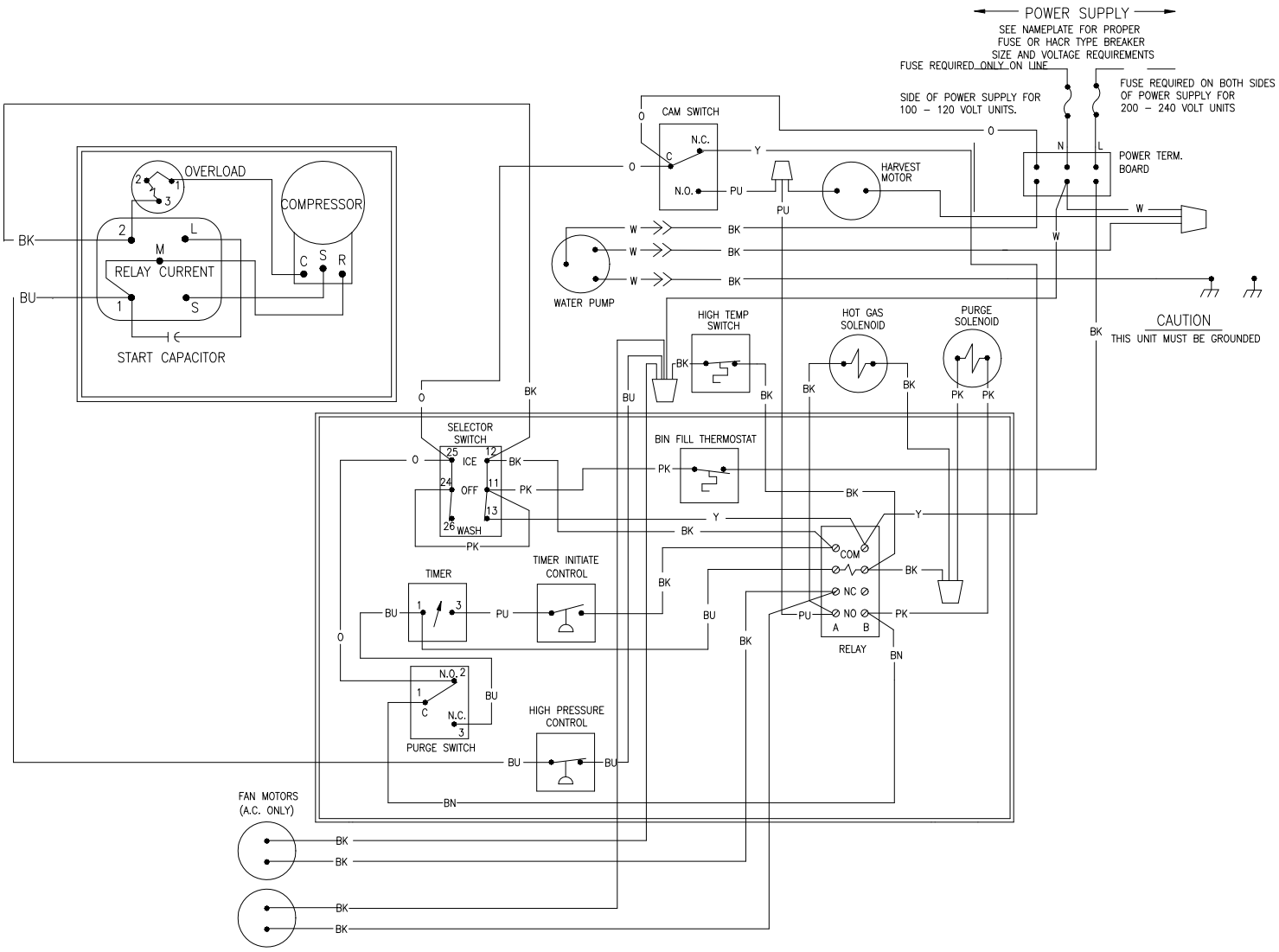

ICEU300 Air and Water

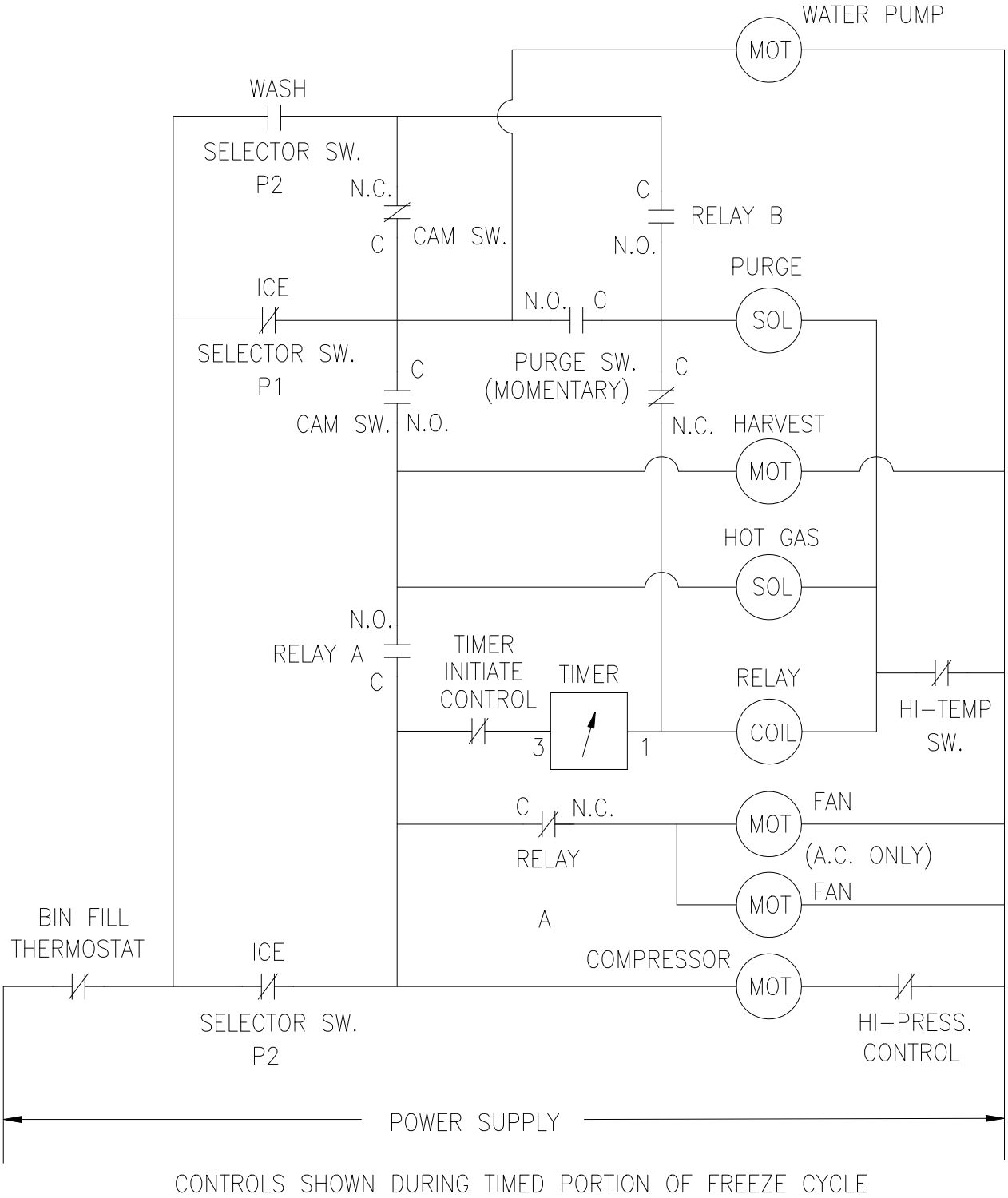

CONTROLS SHOWN DURING TIMED PORTION OF FREEZE CYCLE

9072045-01
REV B

ICEU305 Air and Water

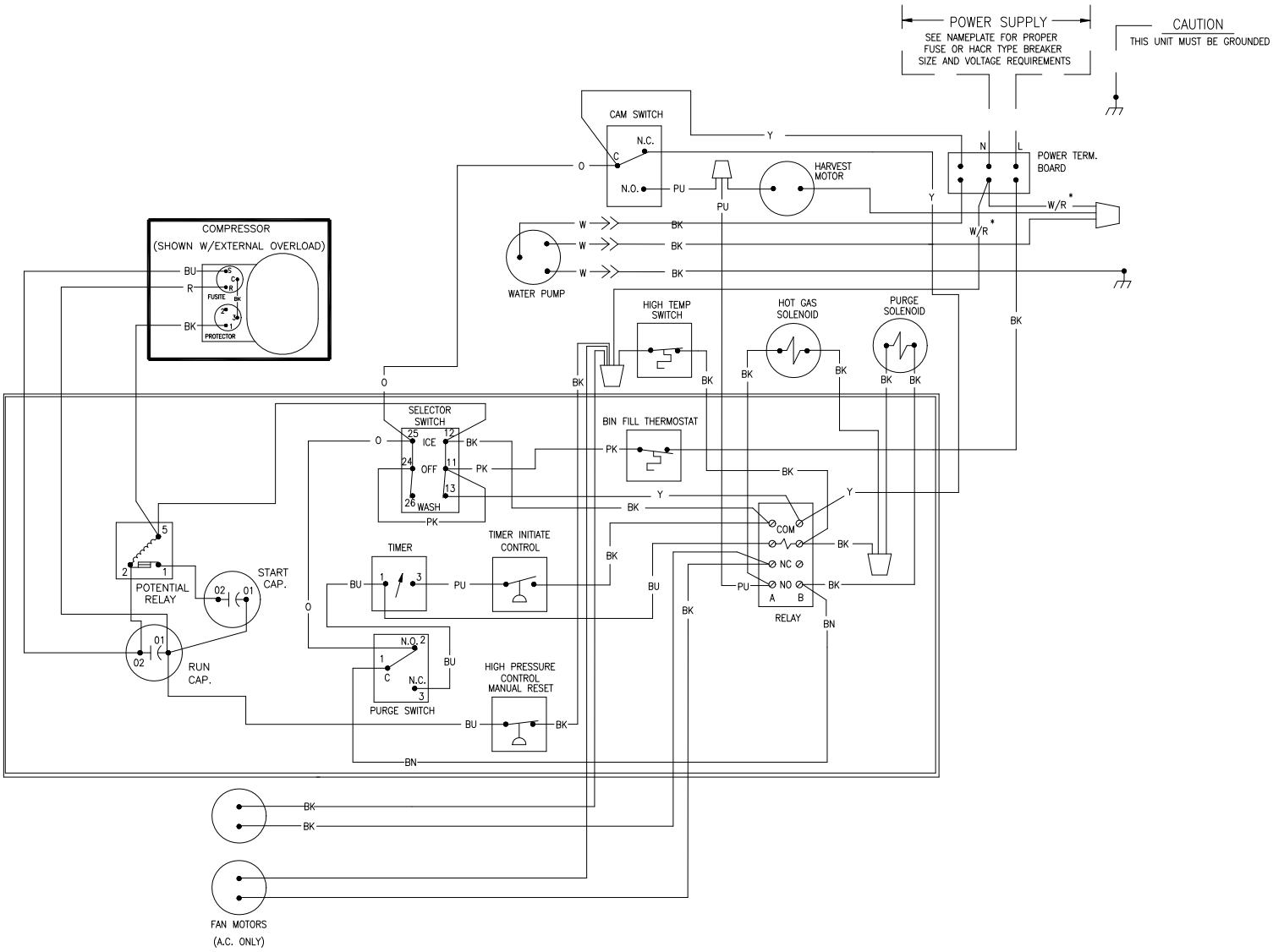

ICEU305 Air and Water

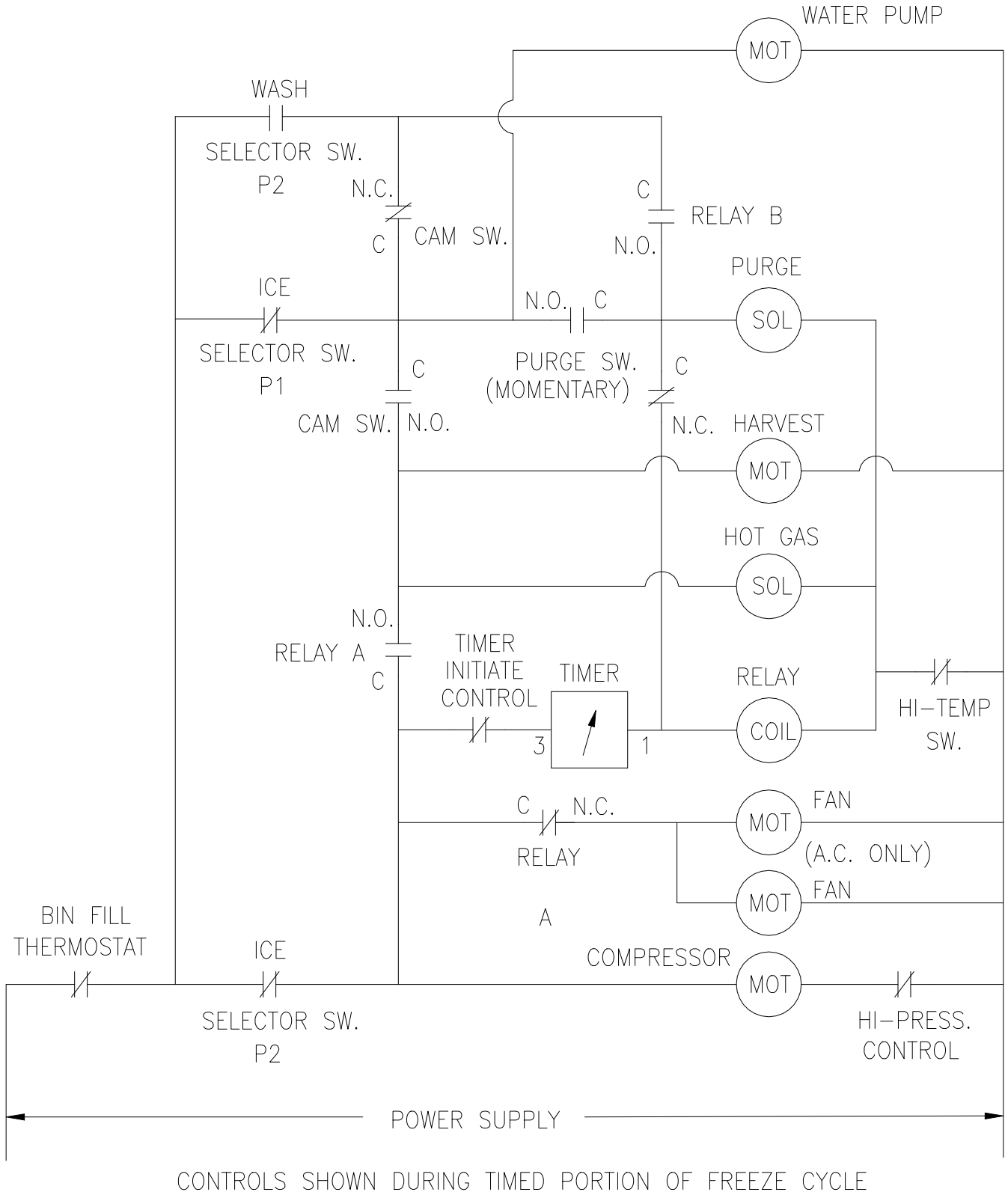

CONTROLS SHOWN DURING TIMED PORTION OF FREEZE CYCLE

ICE0500 Remote Wiring Diagram (R3)

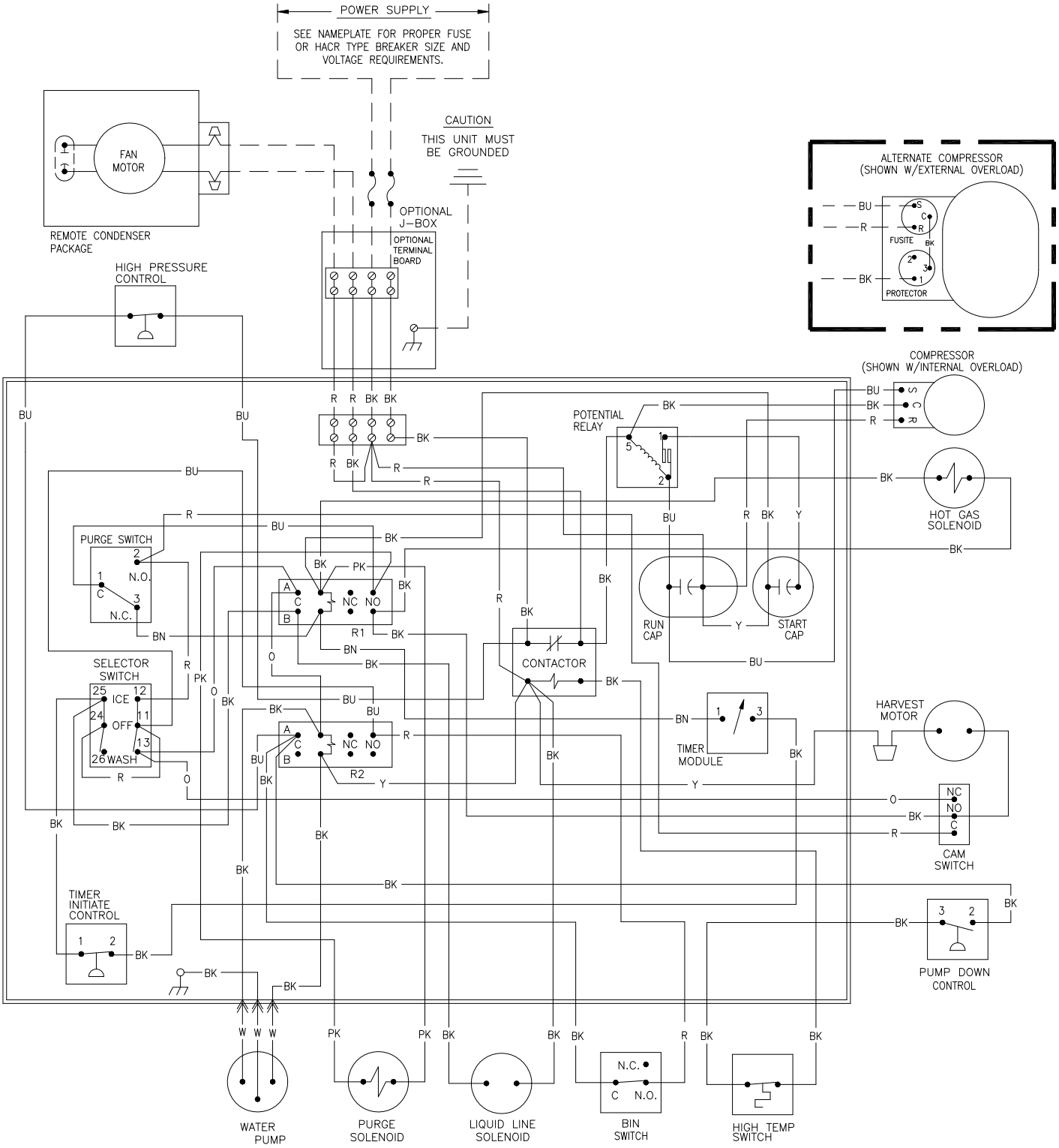

ICE0500 Remote Wiring Schematic (R3)

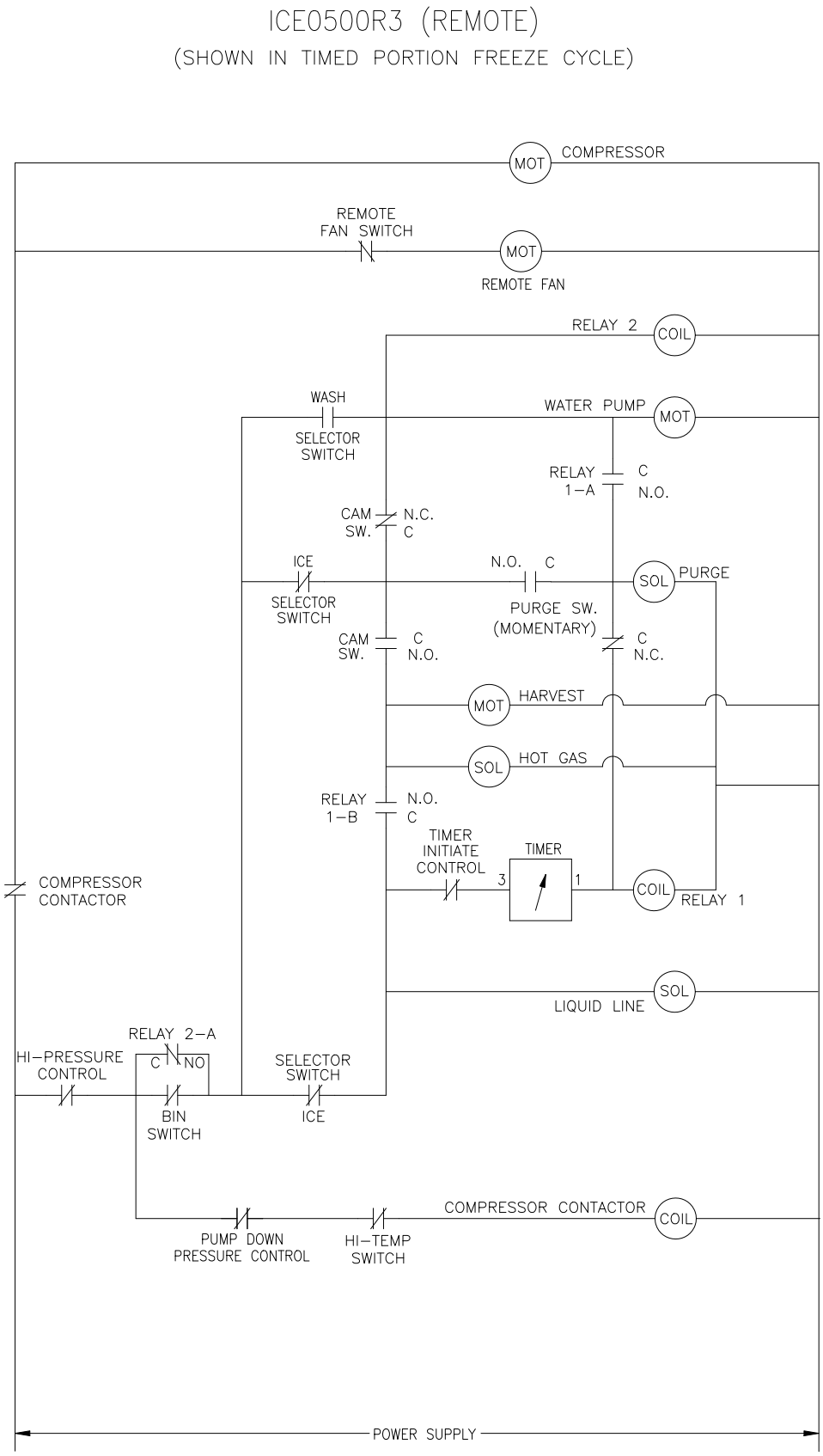

ICE0605/0606/0806/1006 Remote Wiring Diagram (R3)

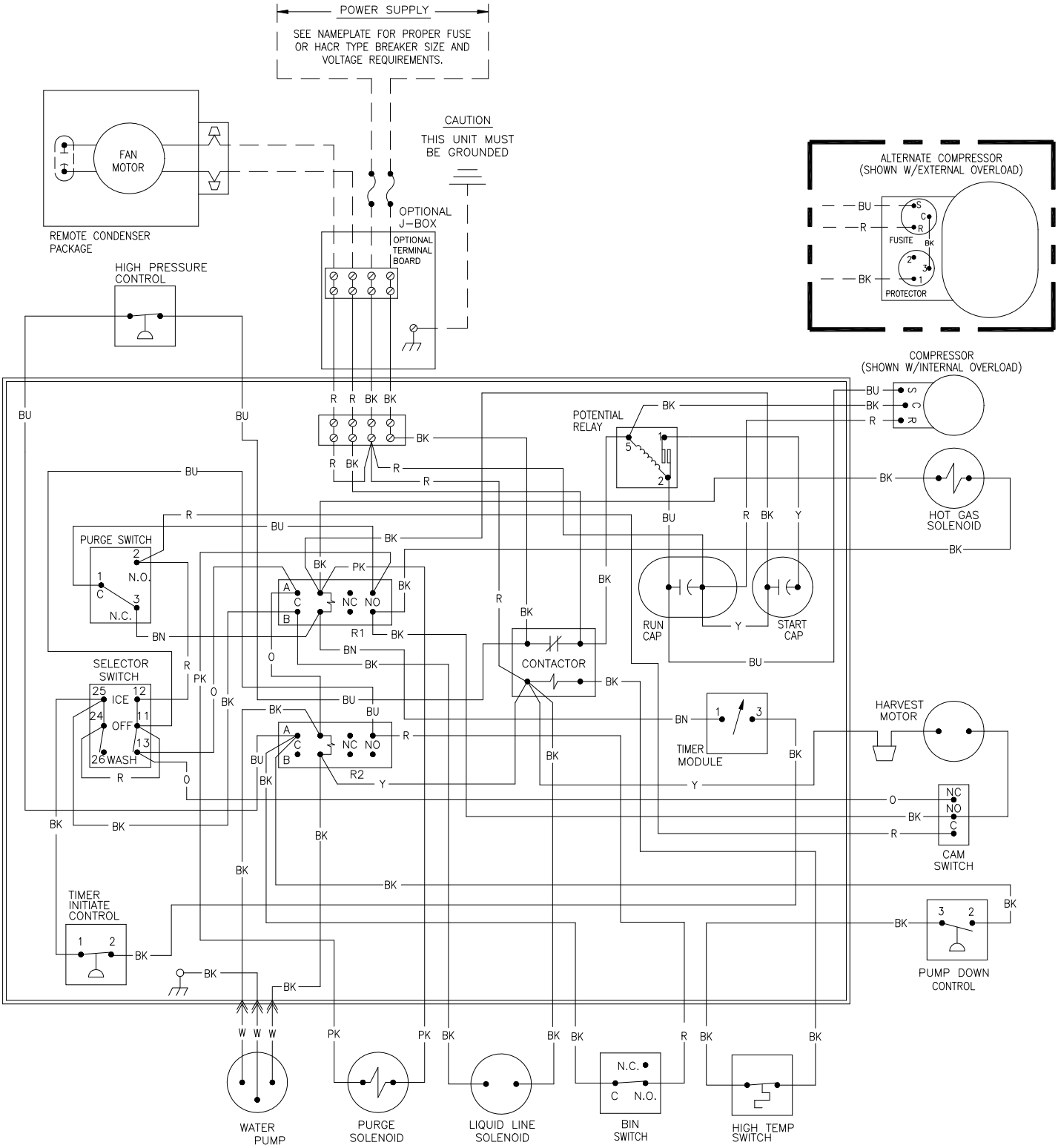

ICE0605/0606/0806/1006 Remote Wiring Schematic (R3)

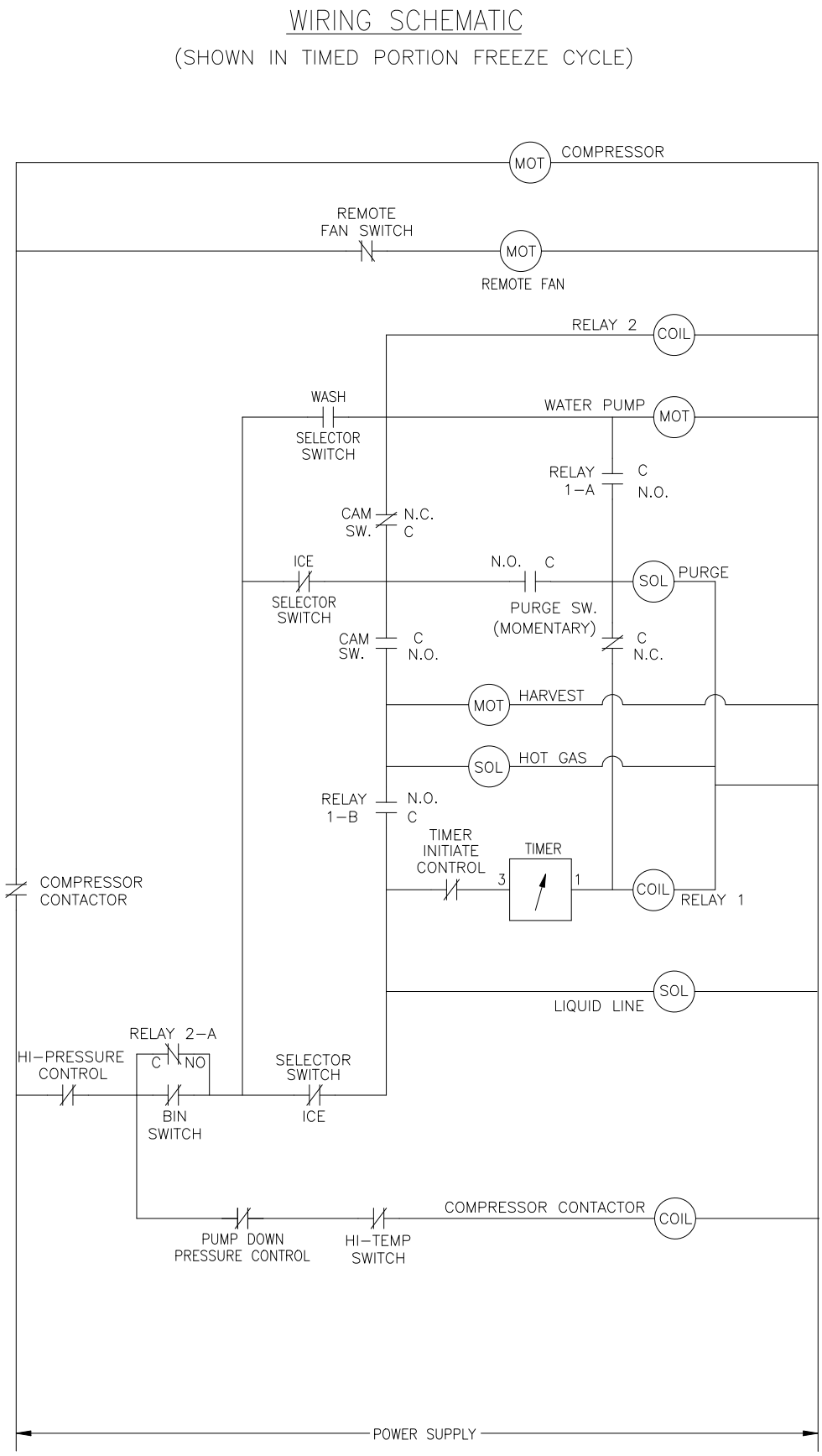

ICE1007 Remote Wiring Diagram (R3)

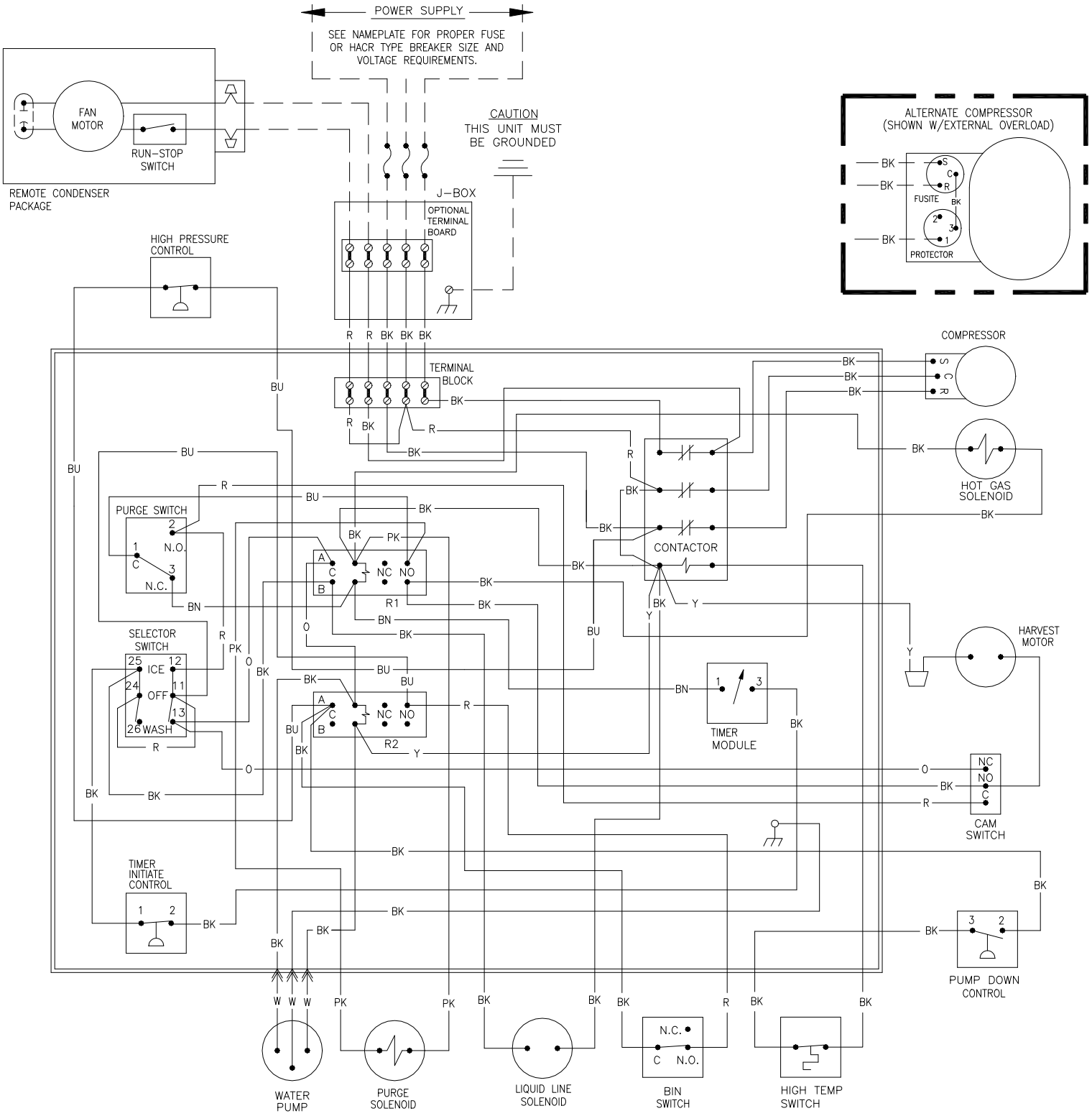

ICE1007 Remote Wiring Schematic (R3)

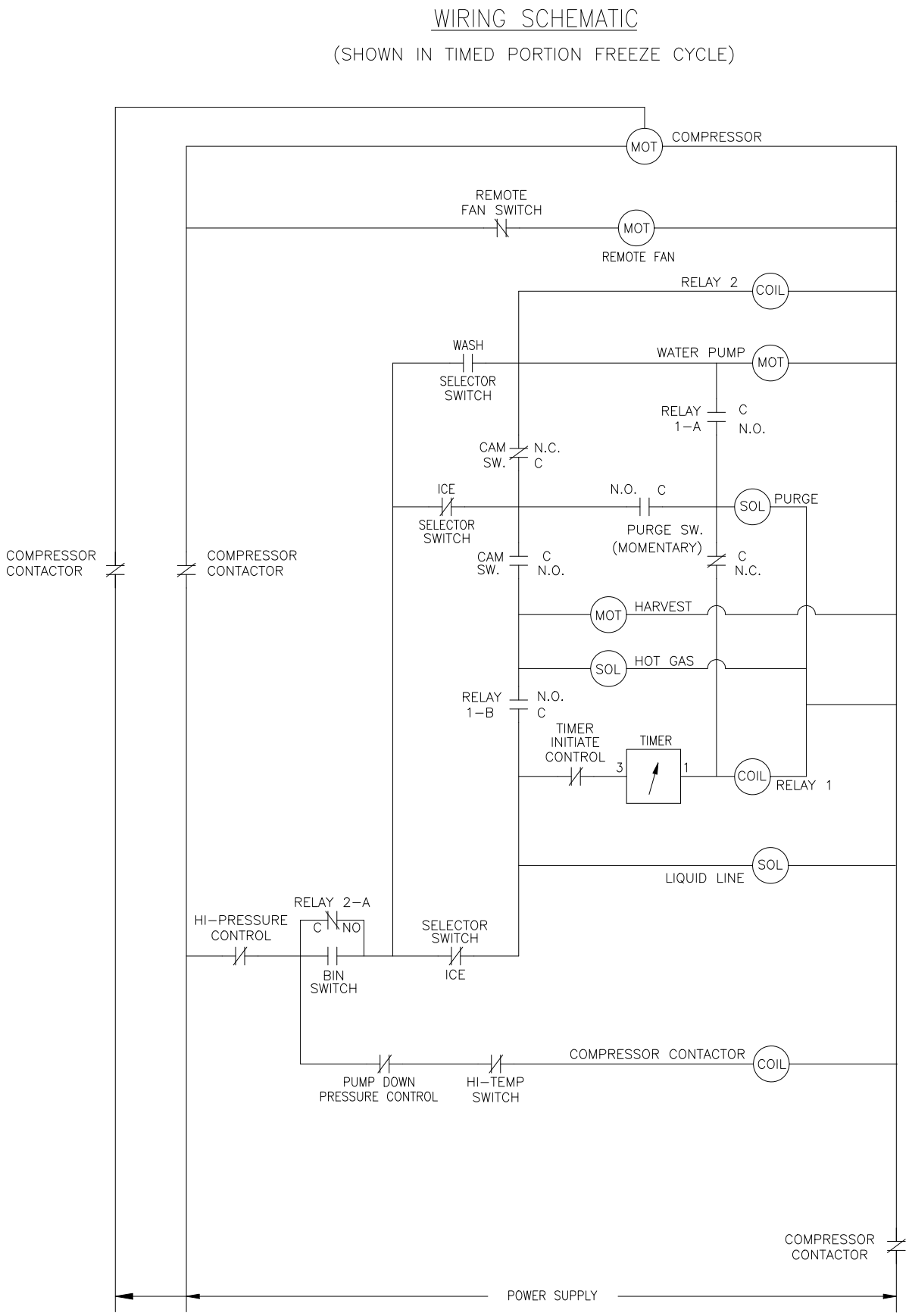

ICE0250 Air4 and Water4, ICE0400 Air3 and Water3 Wiring Diagram

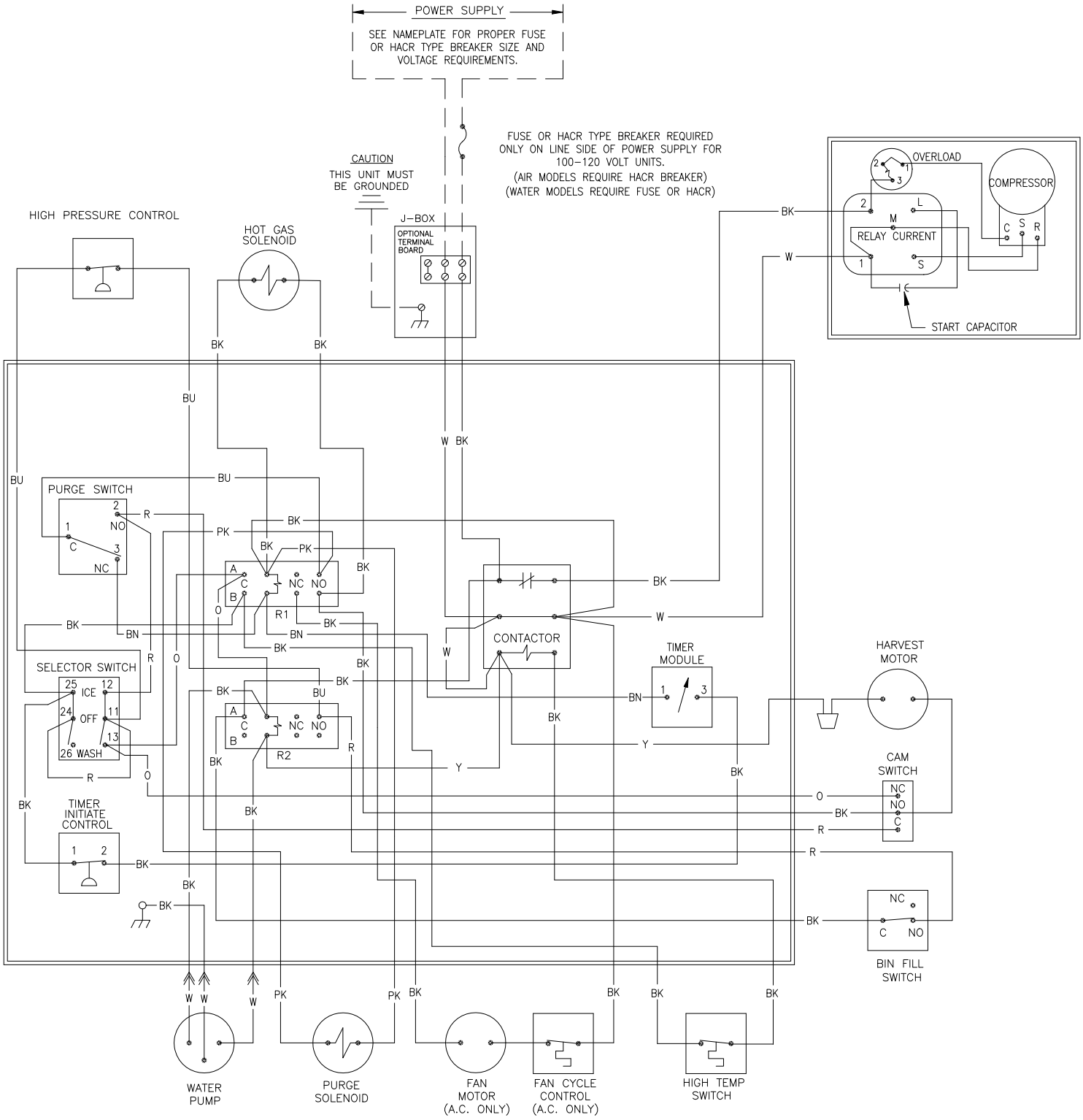

ICE0250 Air4 and Water4, ICE0400 Air3 and Water3 Wiring Schematic

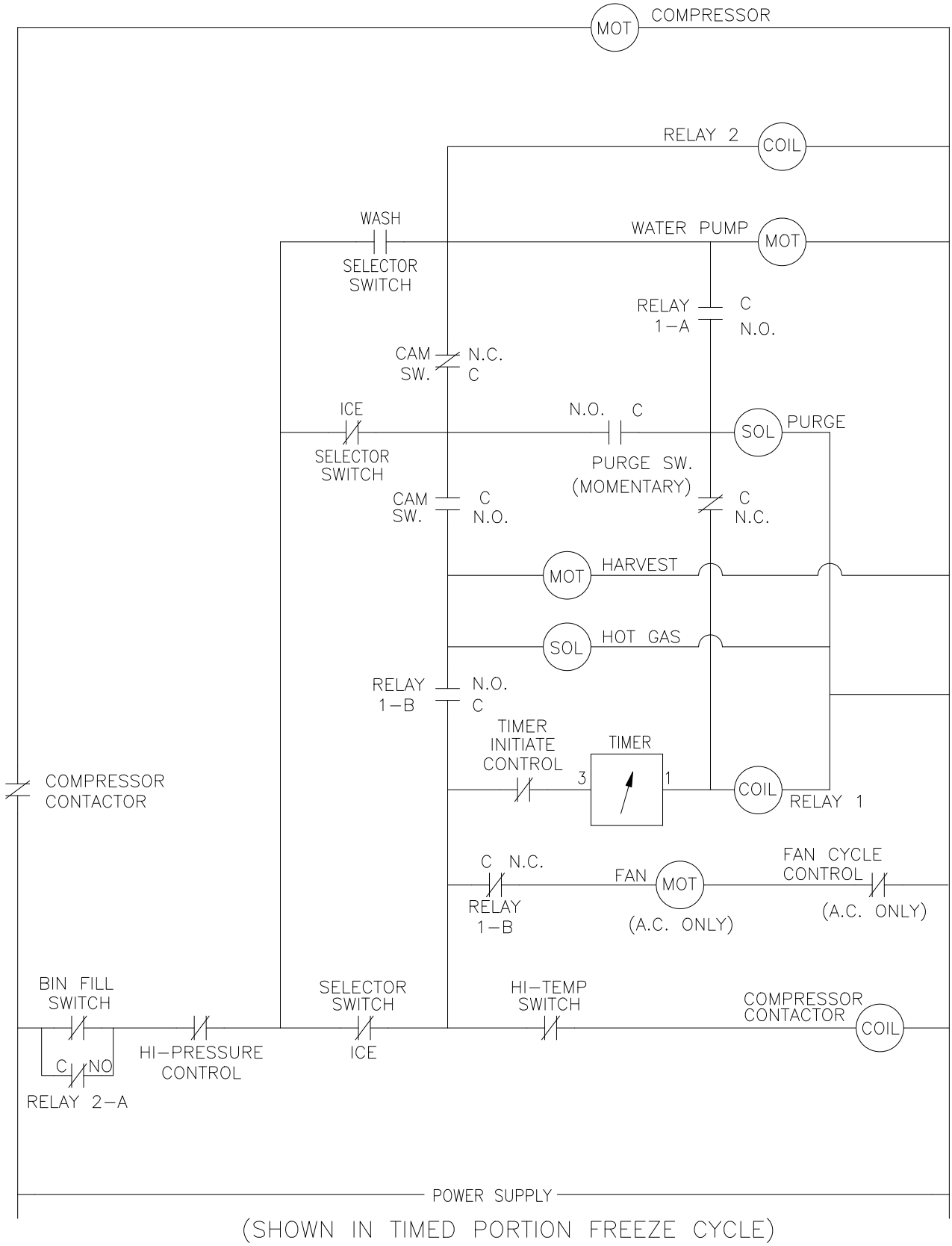

(SHOWN IN TIMED PORTION FREEZE CYCLE)

ICE0320 Air3 and Water3, ICE0520 Air3 and Water3 Wiring Diagram

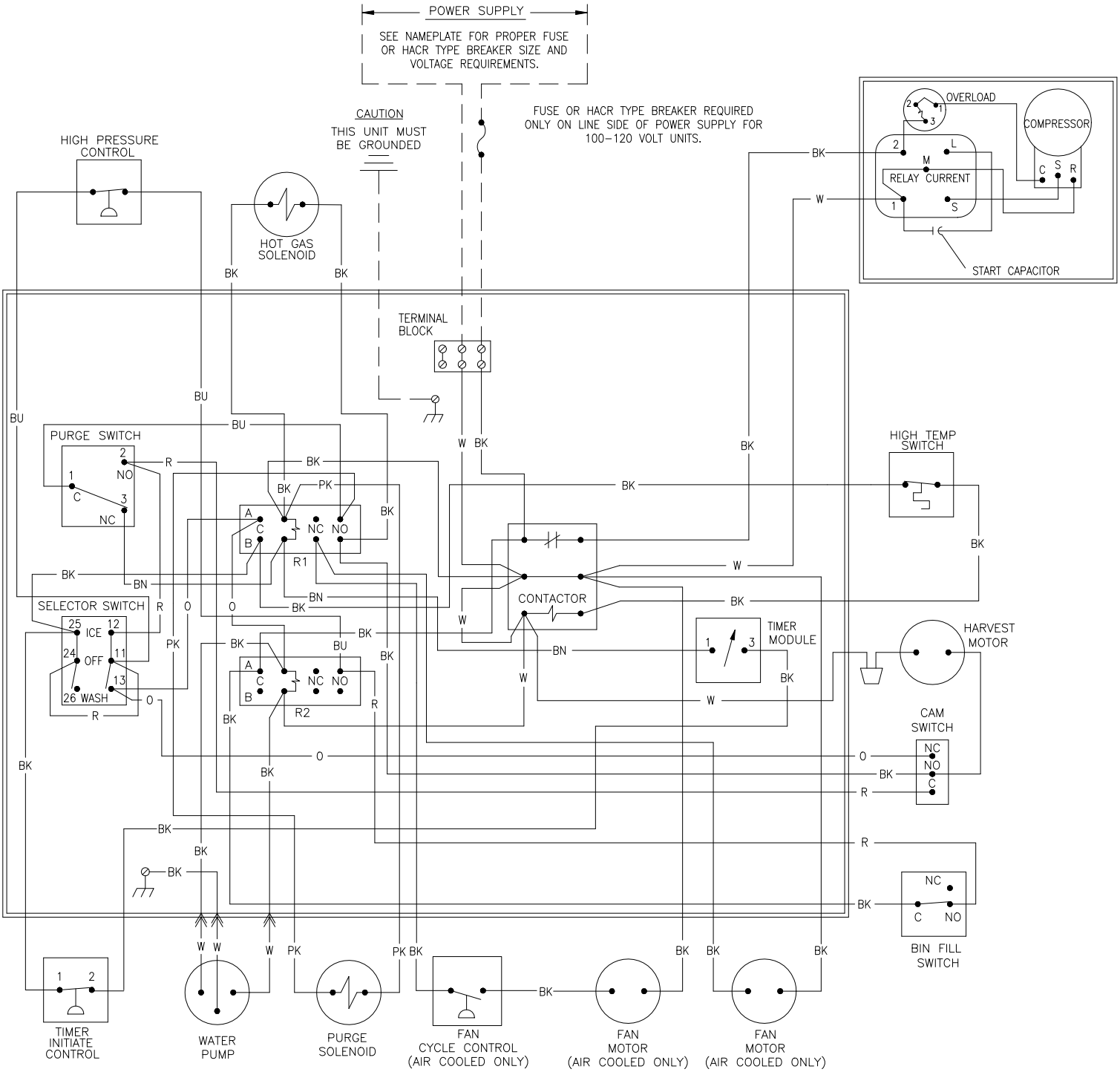

ICE0320 Air4 and Water4, ICE0520 Air3 and Water3 Wiring Schematic

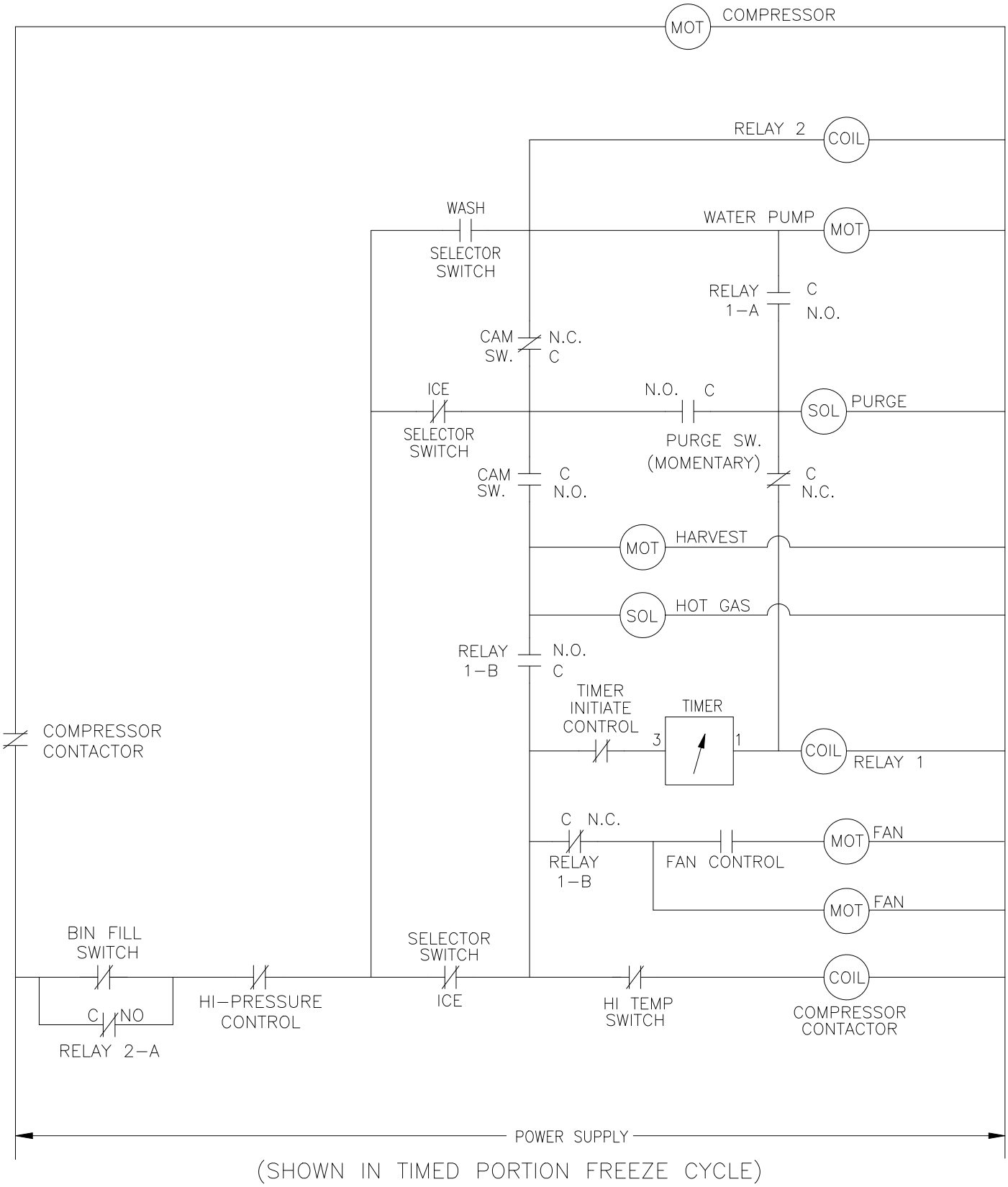

(SHOWN IN TIMED PORTION FREEZE CYCLE)

ICE0406/405 Air3 and Water3, ICE0305 Air3 and Water3 Wiring Diagram

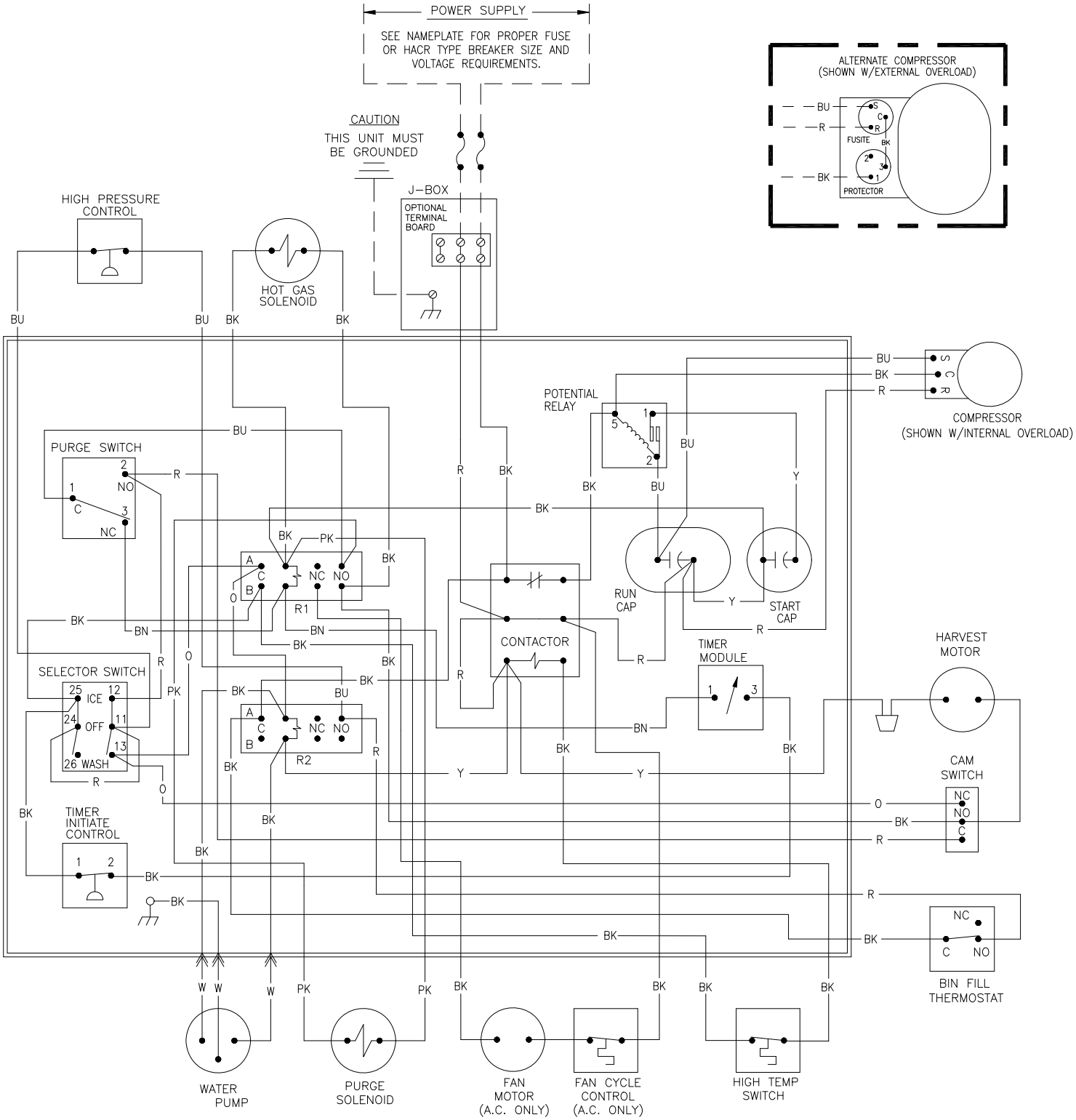

ICE0406/405 Air3 and Water3, ICE0305 Air3 and Water3 Wiring Schematic

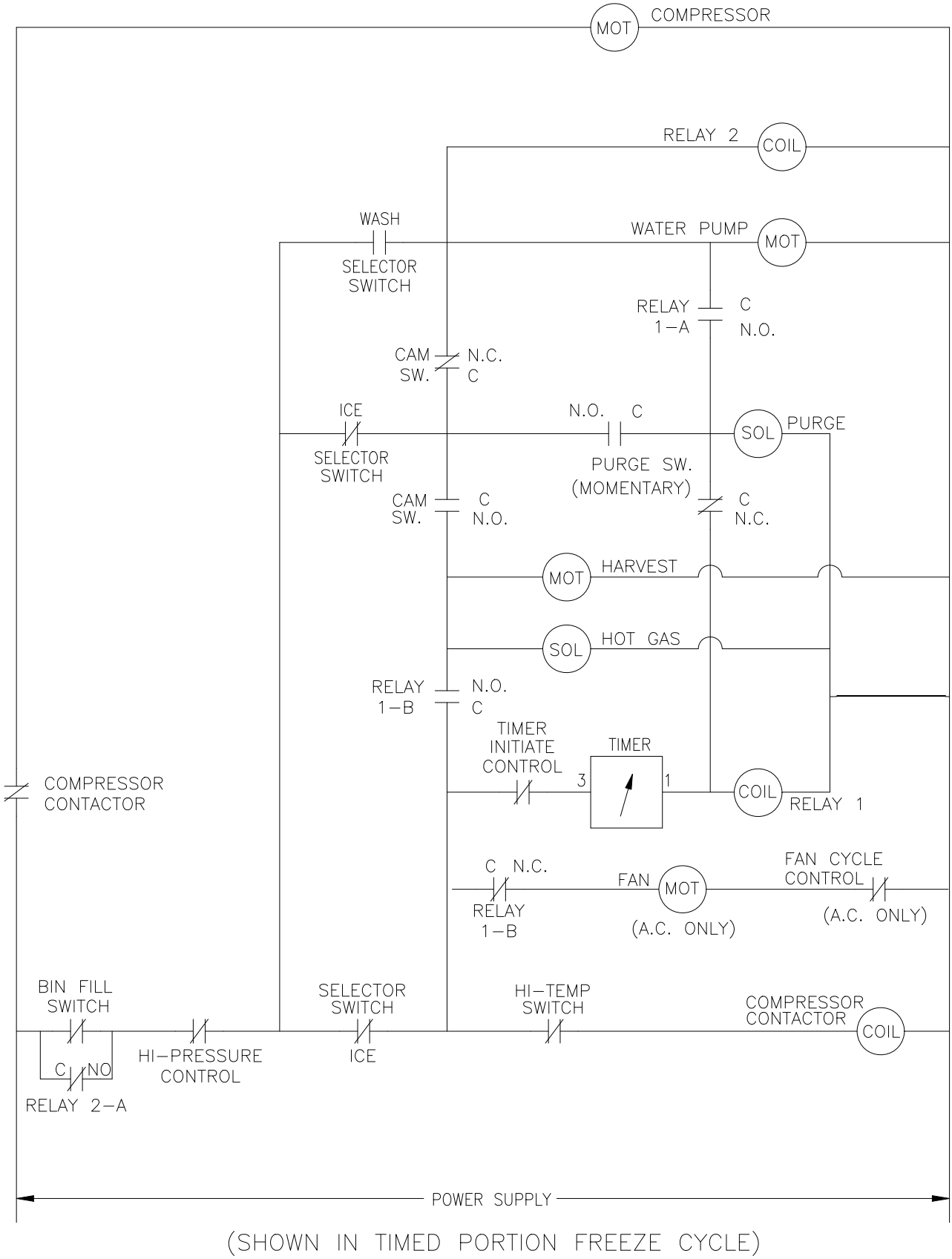

(SHOWN IN TIMED PORTION FREEZE CYCLE)

ICE0325 Air3 and Water3, ICE0525 Air3 and Water3 Wiring Diagram

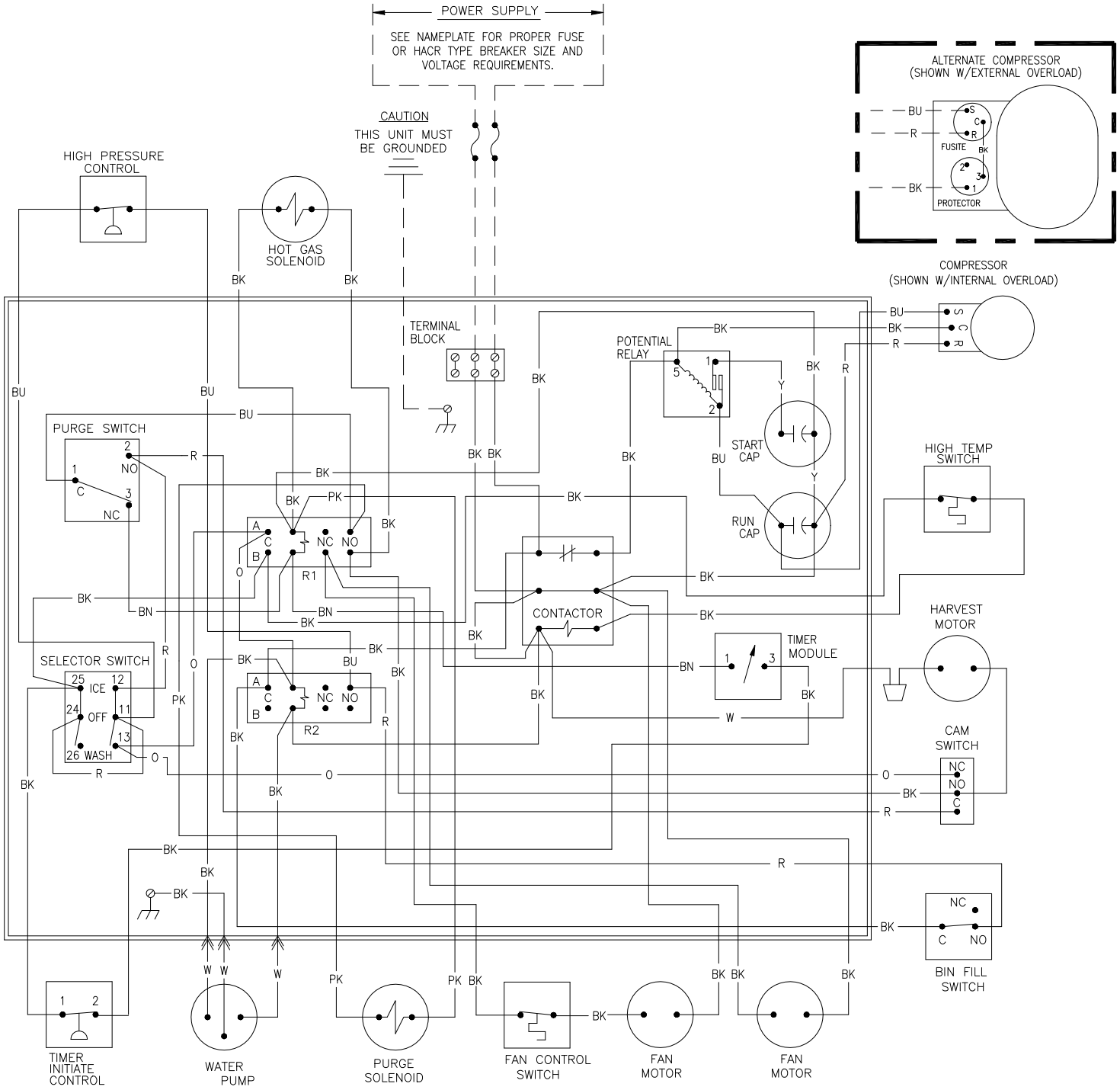

ICE0325 Air3 and Water3, ICE0525 Air3 and Water3 Wiring Schematic

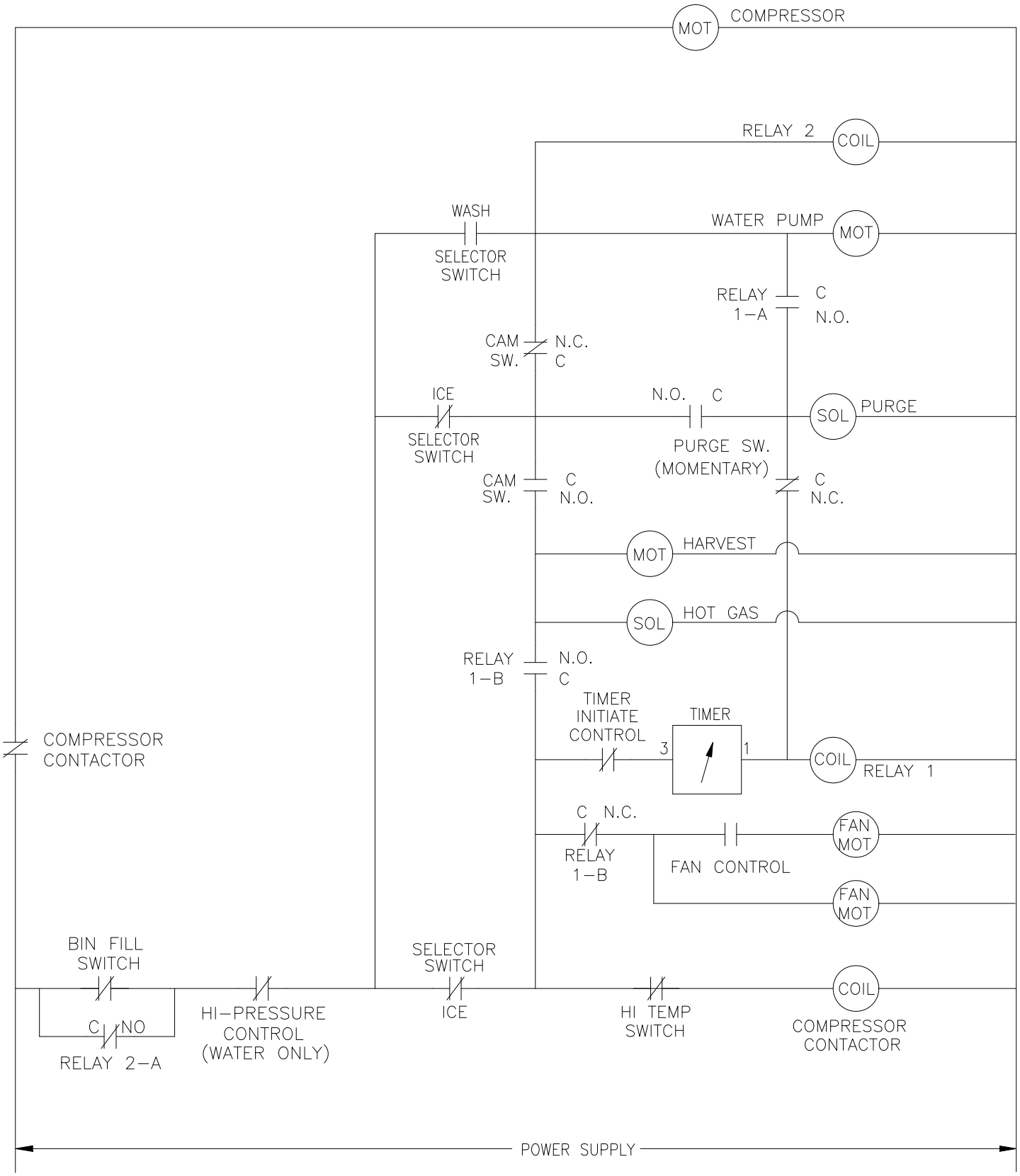

(SHOWN IN TIMED PORTION FREEZE CYCLE)

ICE0500 Air3 and Water3 Wiring Diagram

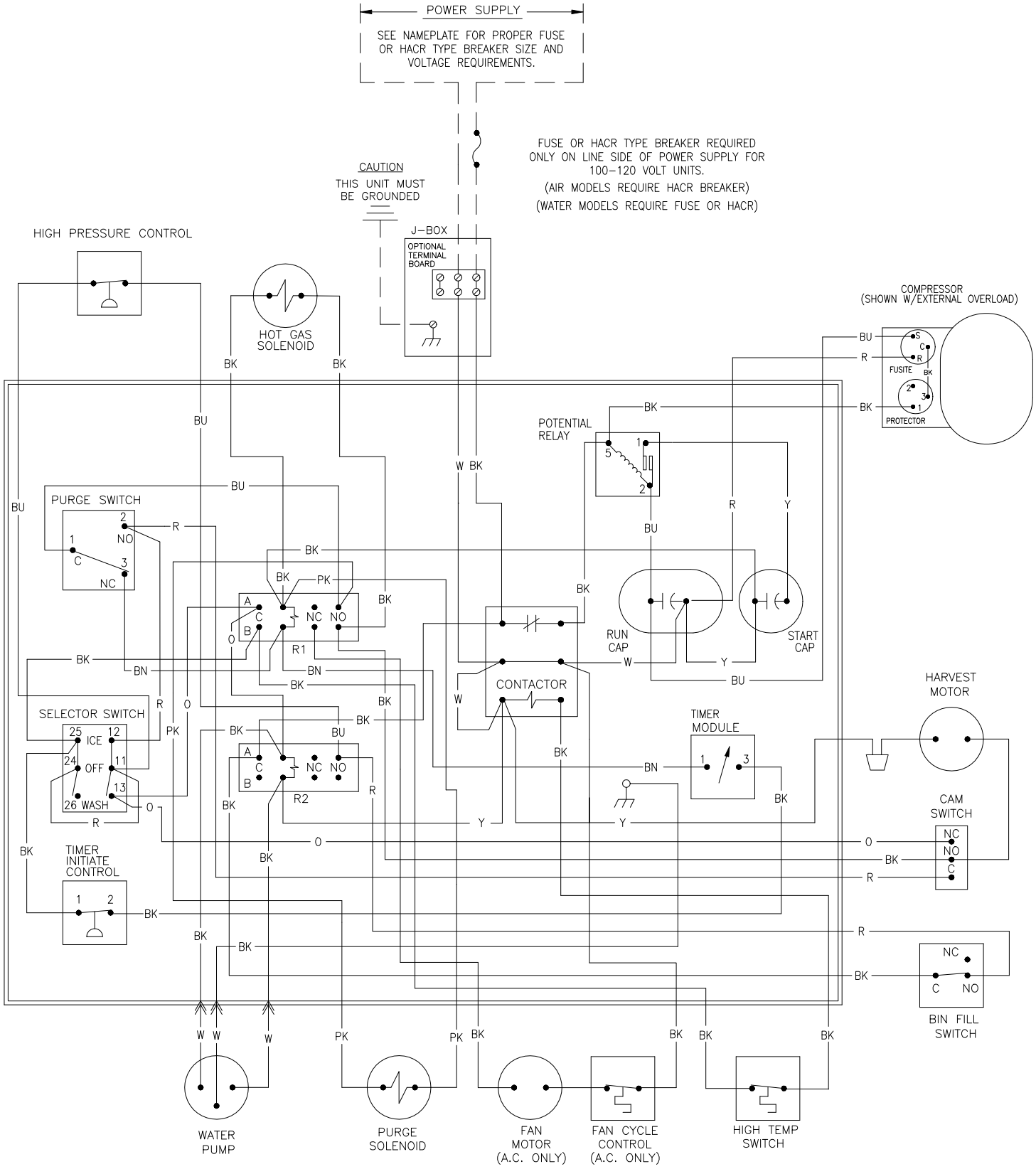

ICE0500 Air3 and Water3 Wiring Schematic

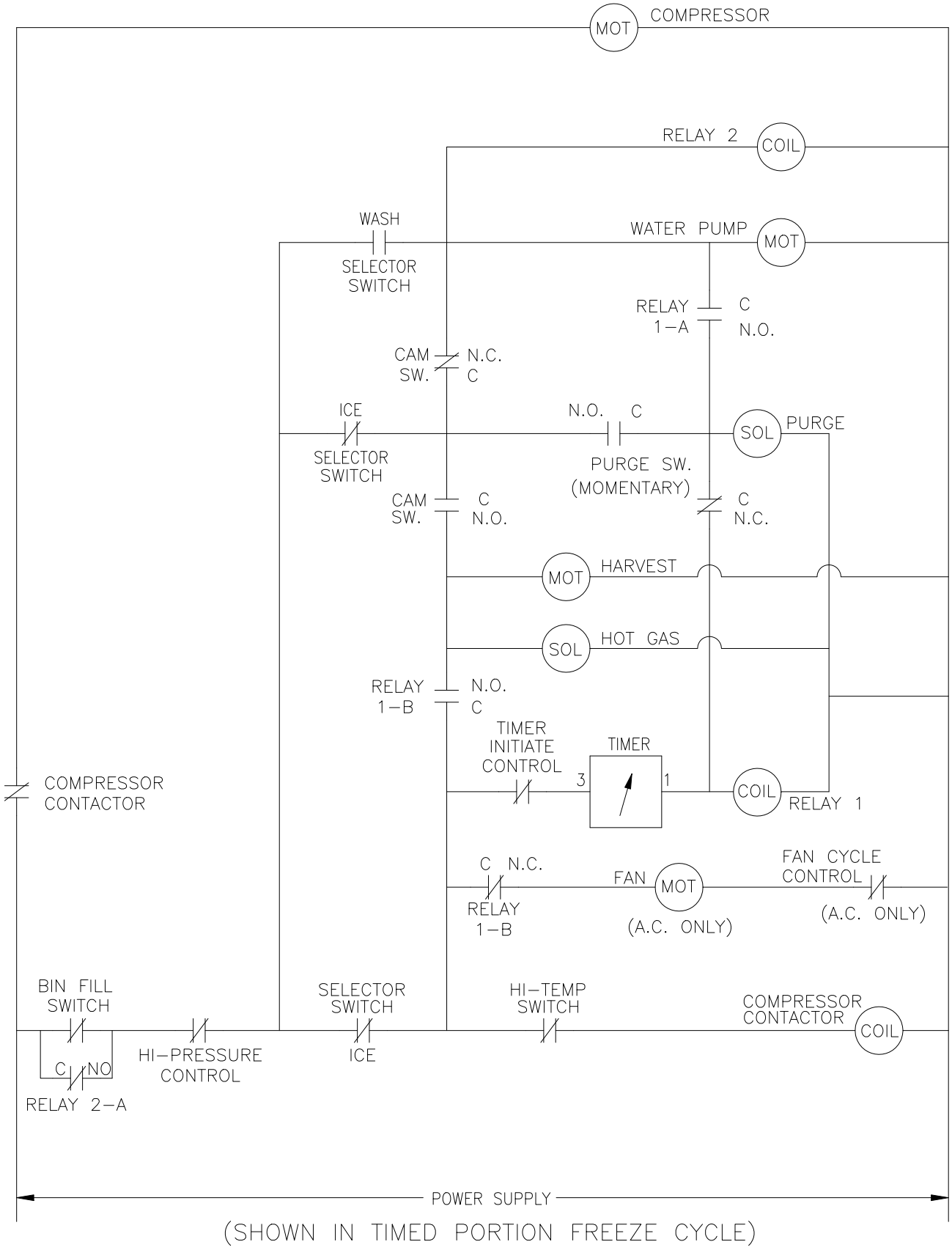

(SHOWN IN TIMED PORTION FREEZE CYCLE)

ICE0500 Remote4 Wiring Diagram

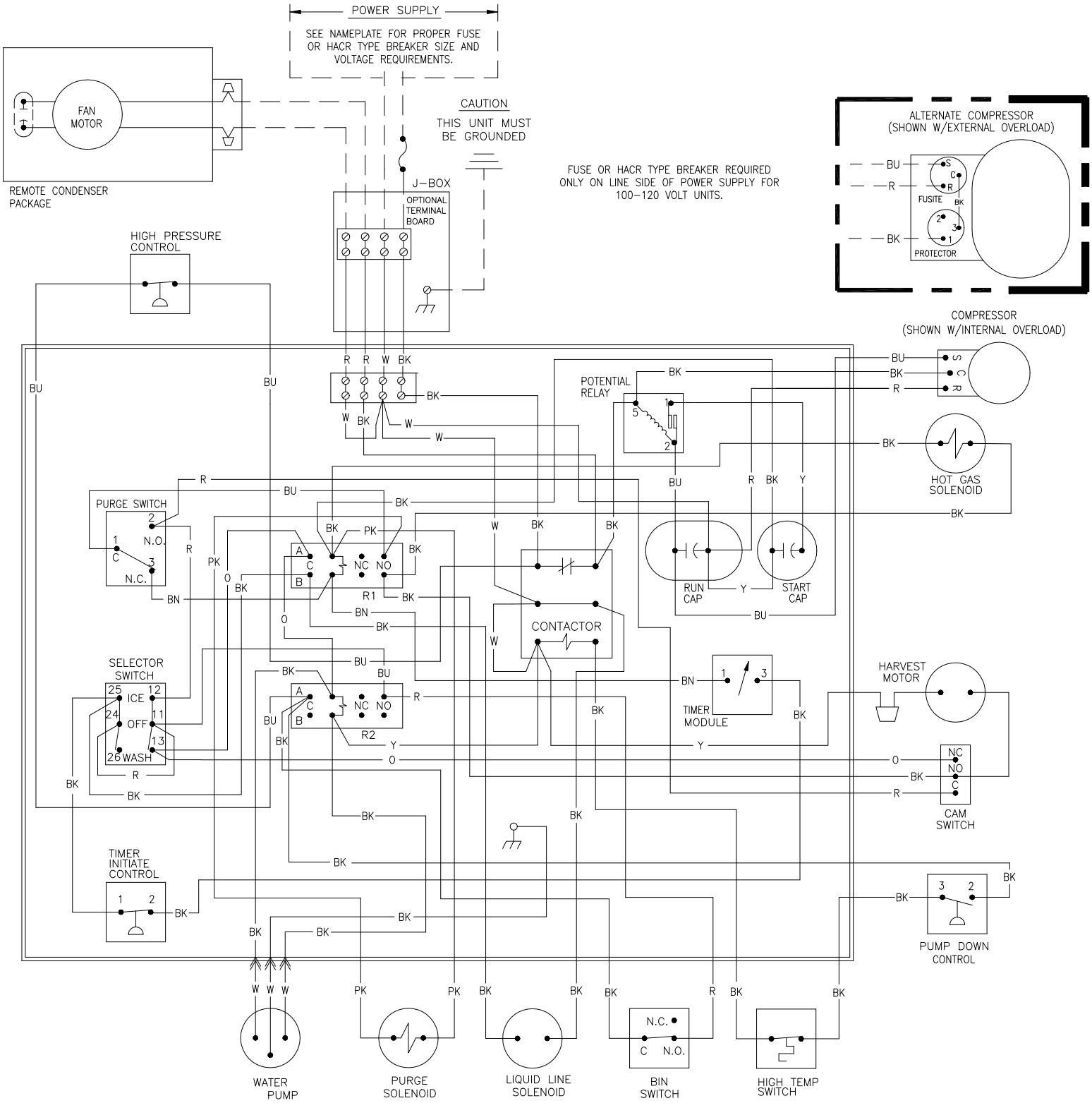

ICE0500 Remote4 Wiring Schematic

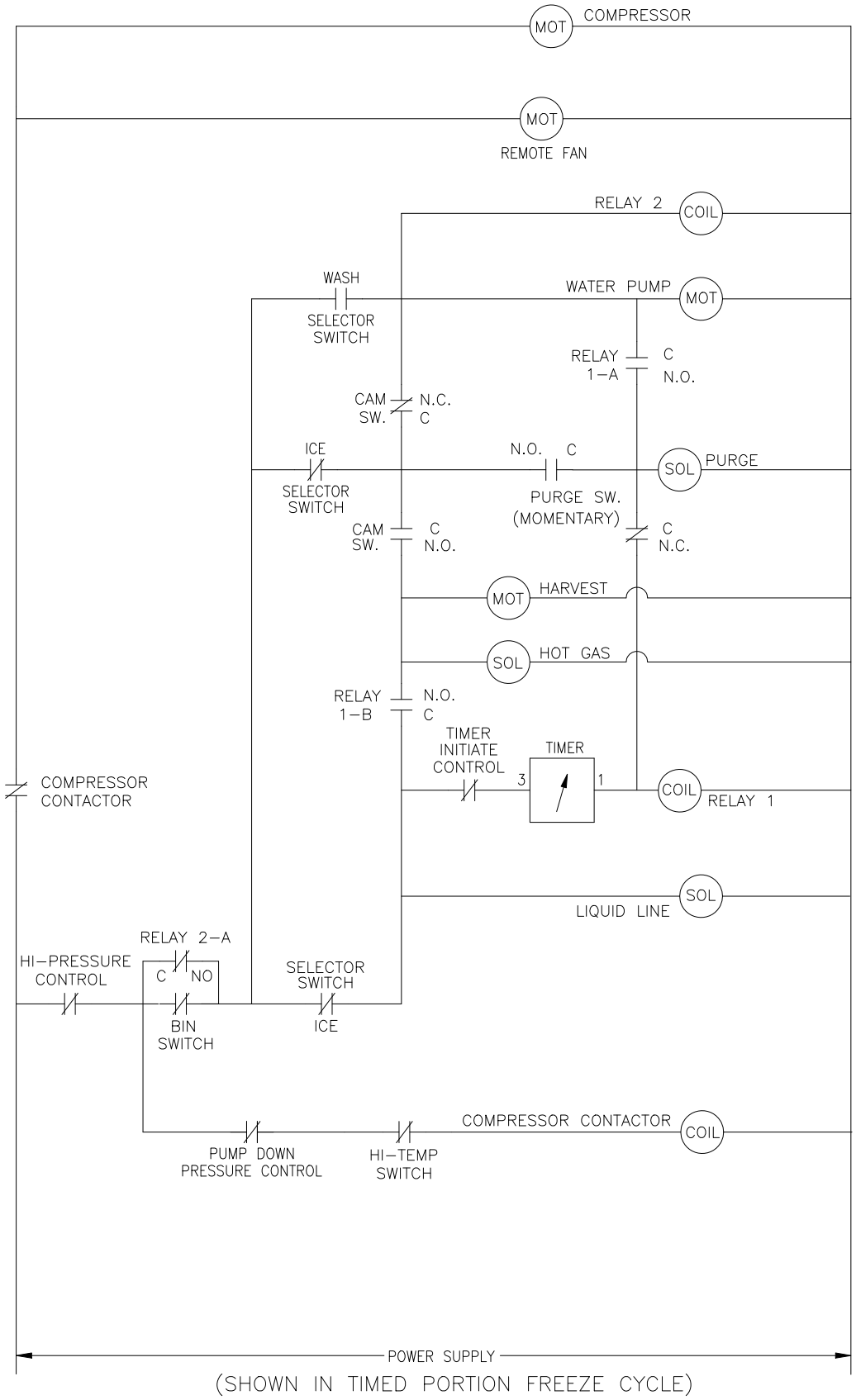

(SHOWN IN TIMED PORTION FREEZE CYCLE)

ICE0606 Air3 and Water3, ICE0605 Air3 and Water3 Wiring Diagram
ICE0806 Air3 and Water3, ICE0805 Air3 and Water3 Wiring Diagram
ICE1006 Air3 and Water3, ICE1005 Air3 and Water3 Wiring Diagram

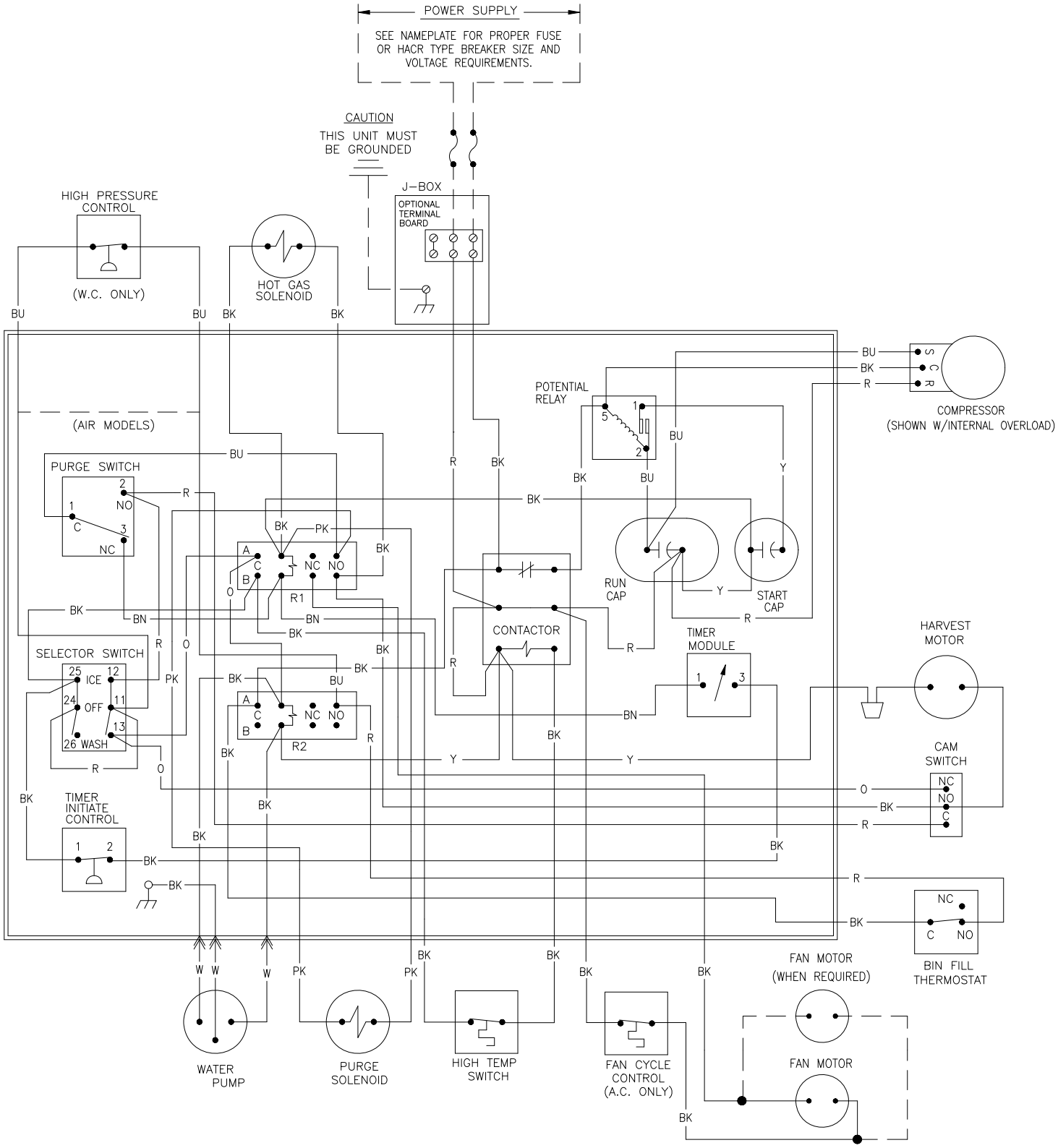

ICE0606 Air3 and Water3, ICE0605 Air3 and Water3
ICE0806 Air3 and Water3, ICE0805 Air3 and Water3
ICE1006 Air3 and Water3, ICE1005 Air3 and Water3

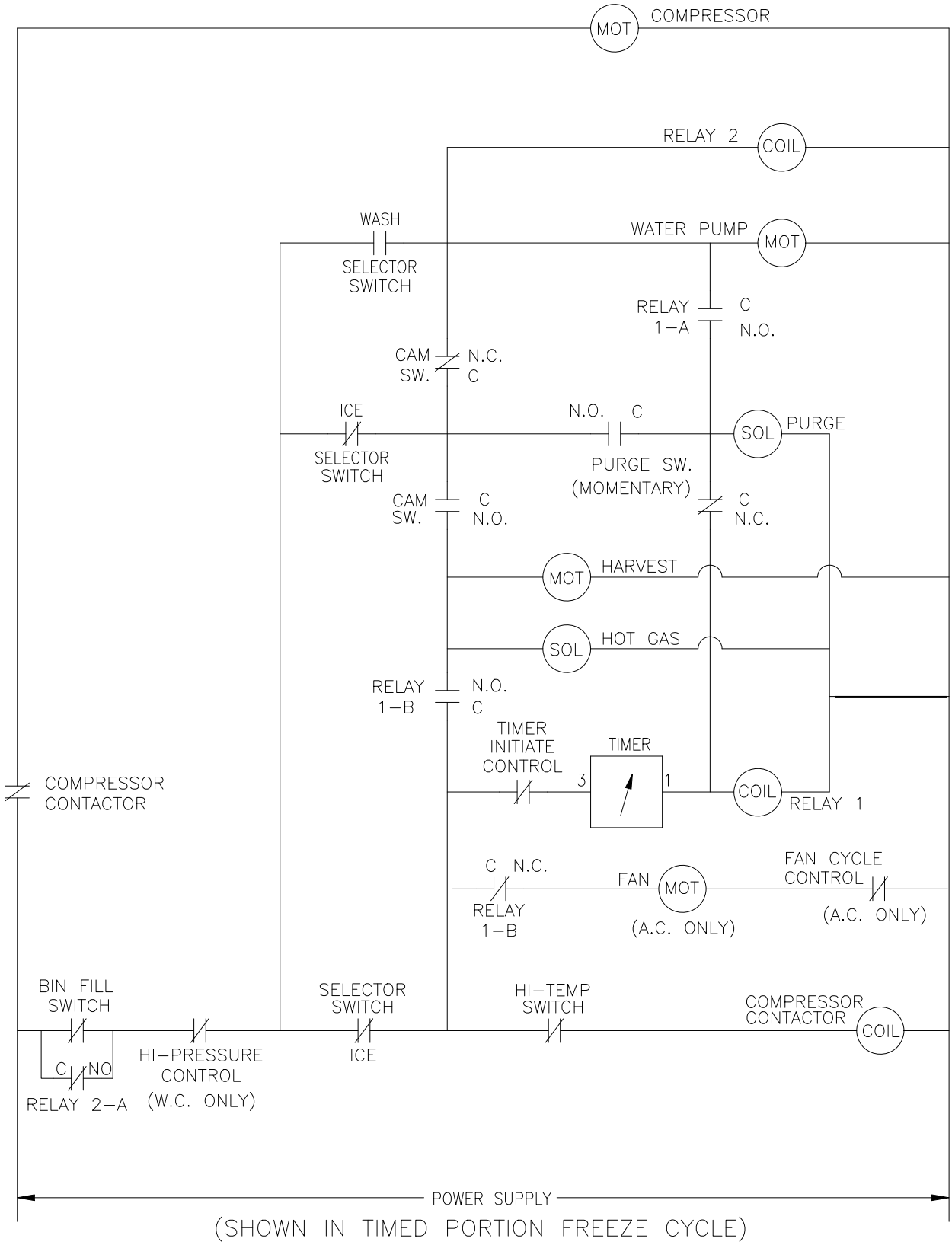

(SHOWN IN TIMED PORTION FREEZE CYCLE)

ICE0606 Remote4&5 and ICE0605 Remote4&5 Wiring Diagram
ICE0806 Remote4 and ICE0805 Remote4 Wiring Diagram
ICE1006 Remote4 and ICE1005 Remote4 Wiring Diagram

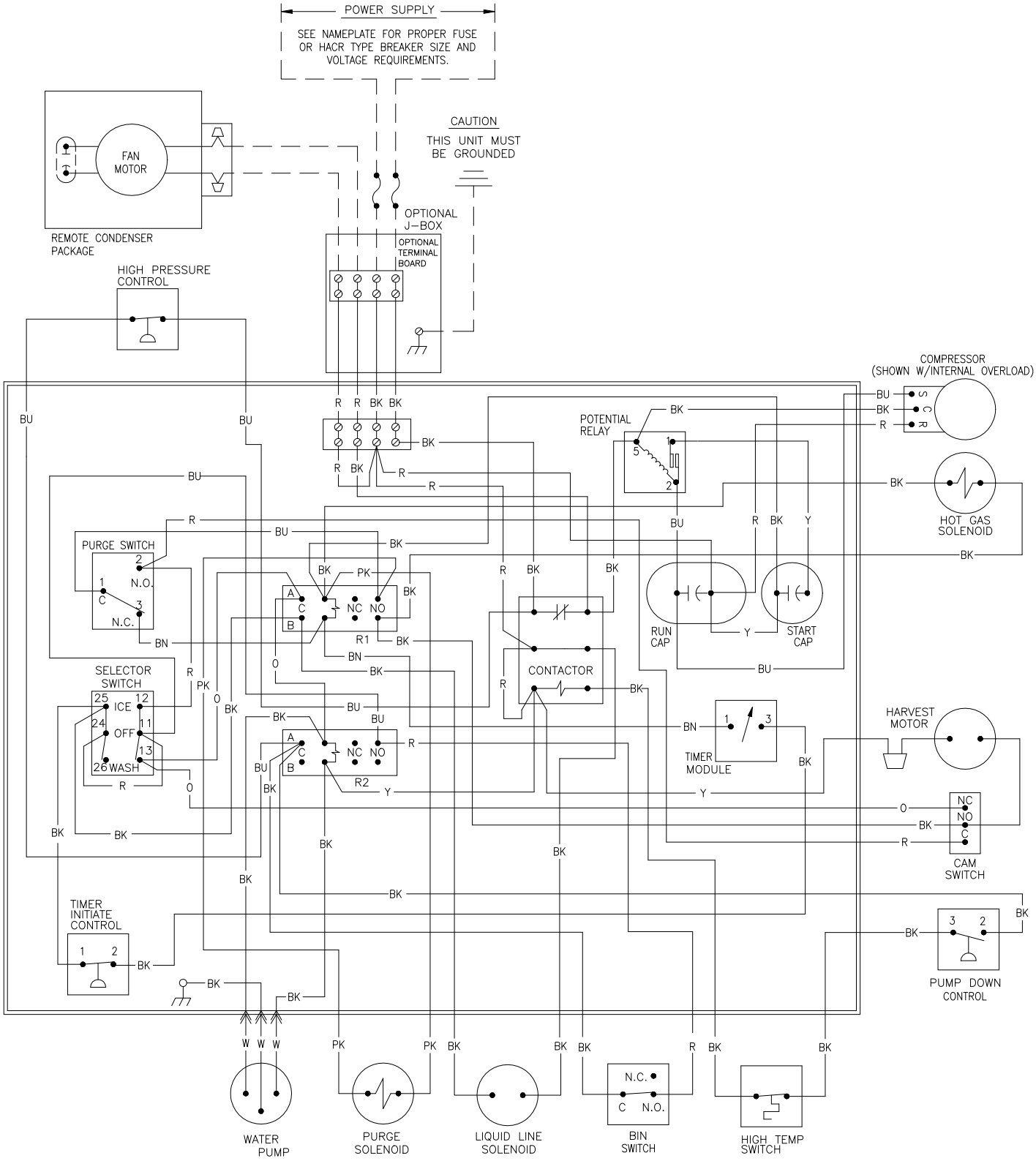

ICE0606 Remote4&5 and ICE0605 Remote4&5 Wiring Schematic
ICE0806 Remote4 and ICE0805 Remote4 Wiring Schematic
ICE1006 Remote4 and ICE1005 Remote4 Wiring Schematic

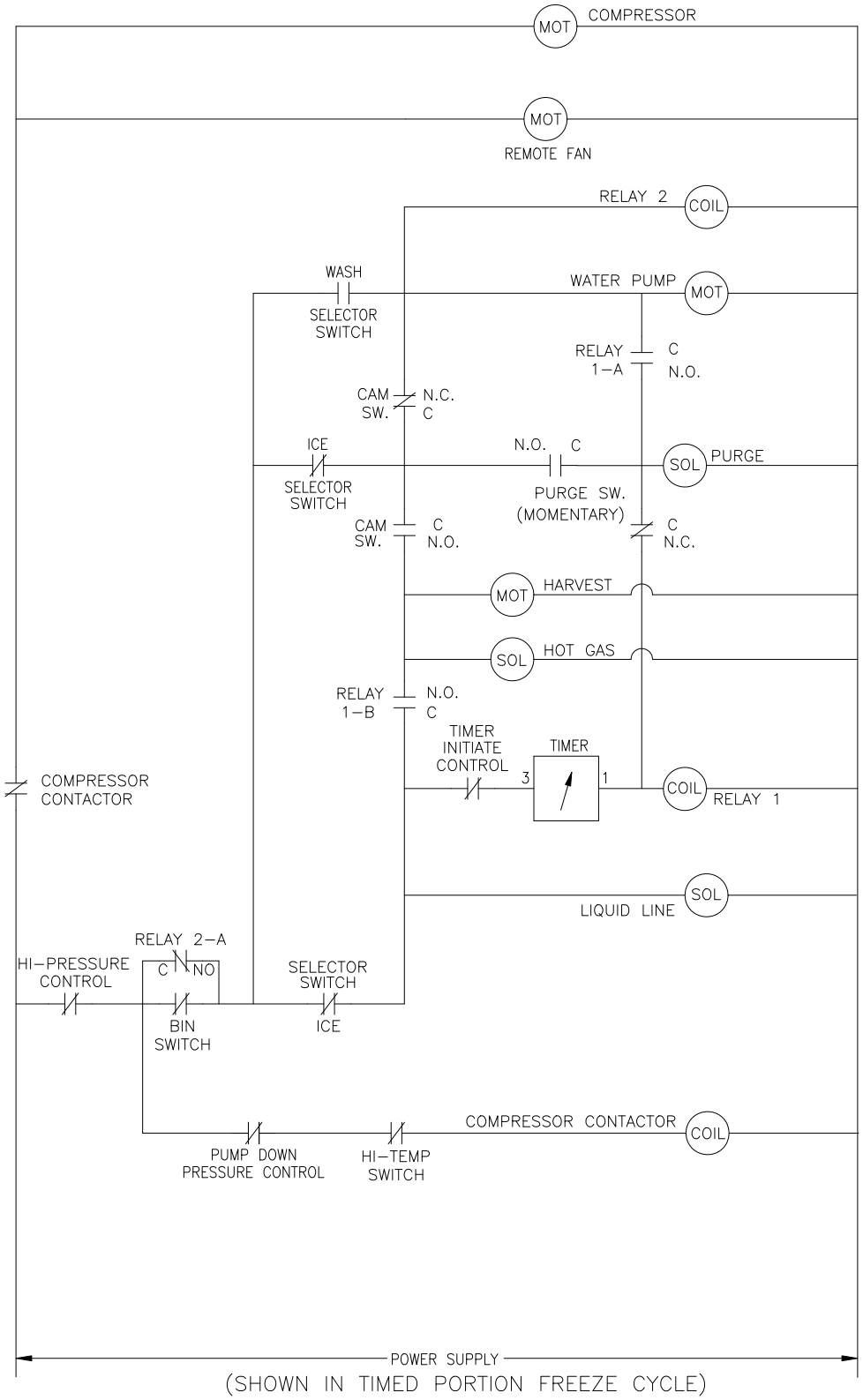

(SHOWN IN TIMED PORTION FREEZE CYCLE)

ICE1405/6A3/W3, ICE1806W3 and ICE2106W3 Wiring Diagram

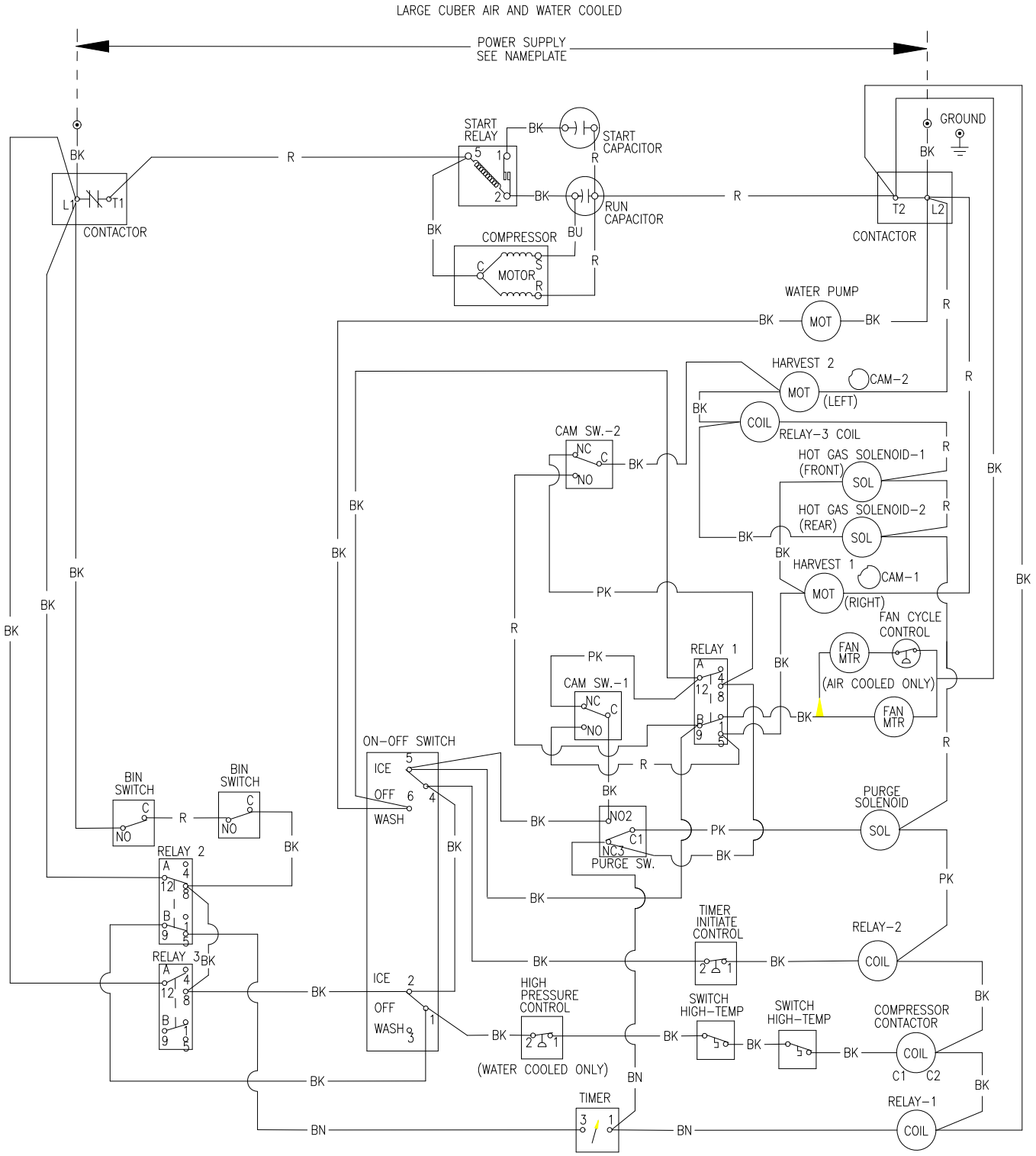

ICE1405/6A3/W3, ICE1806W3 and ICE2106W3 Wiring Schematic

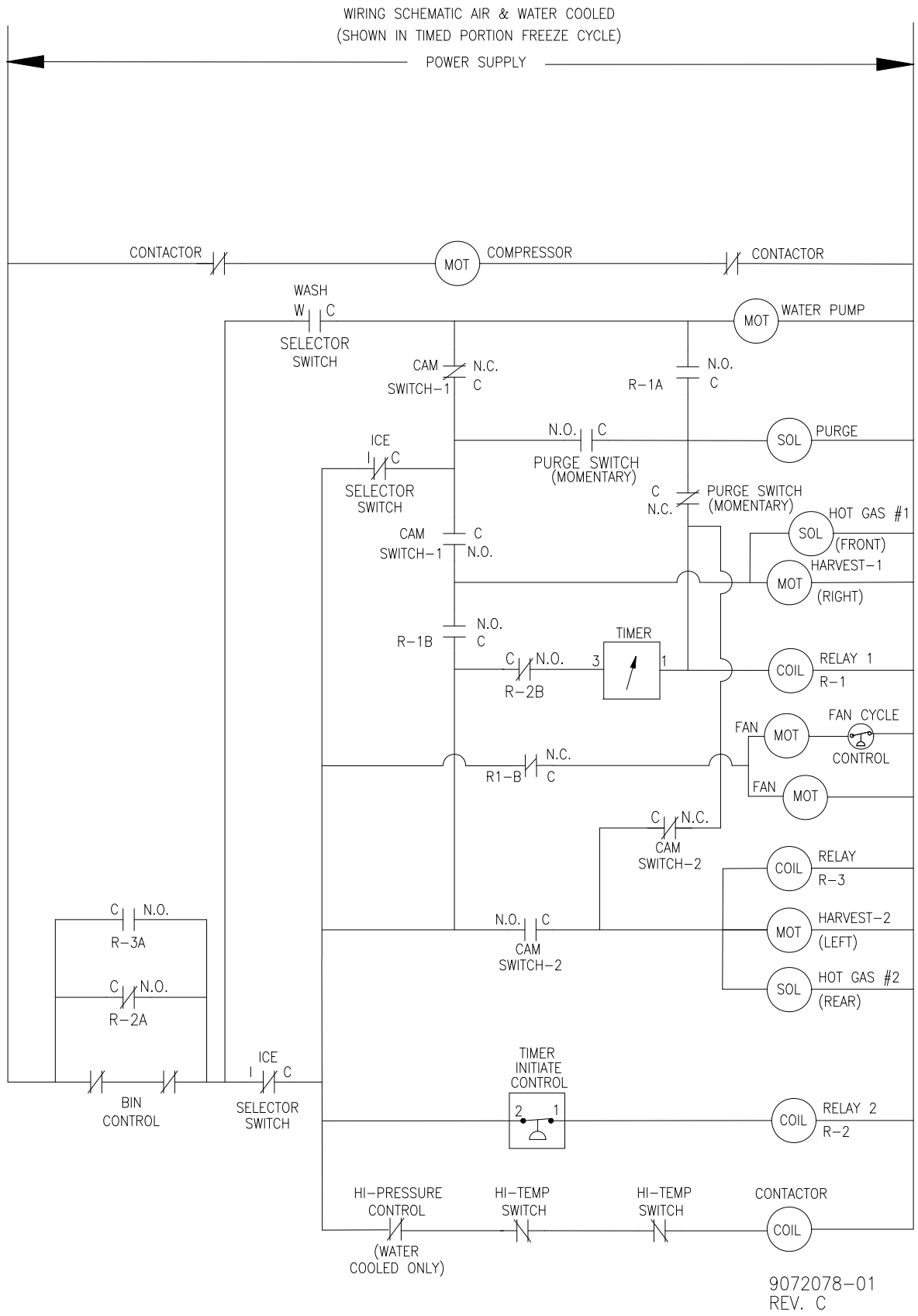

ICE1407A3/W3, ICE1807W3 and ICE2107W3 Wiring Diagram

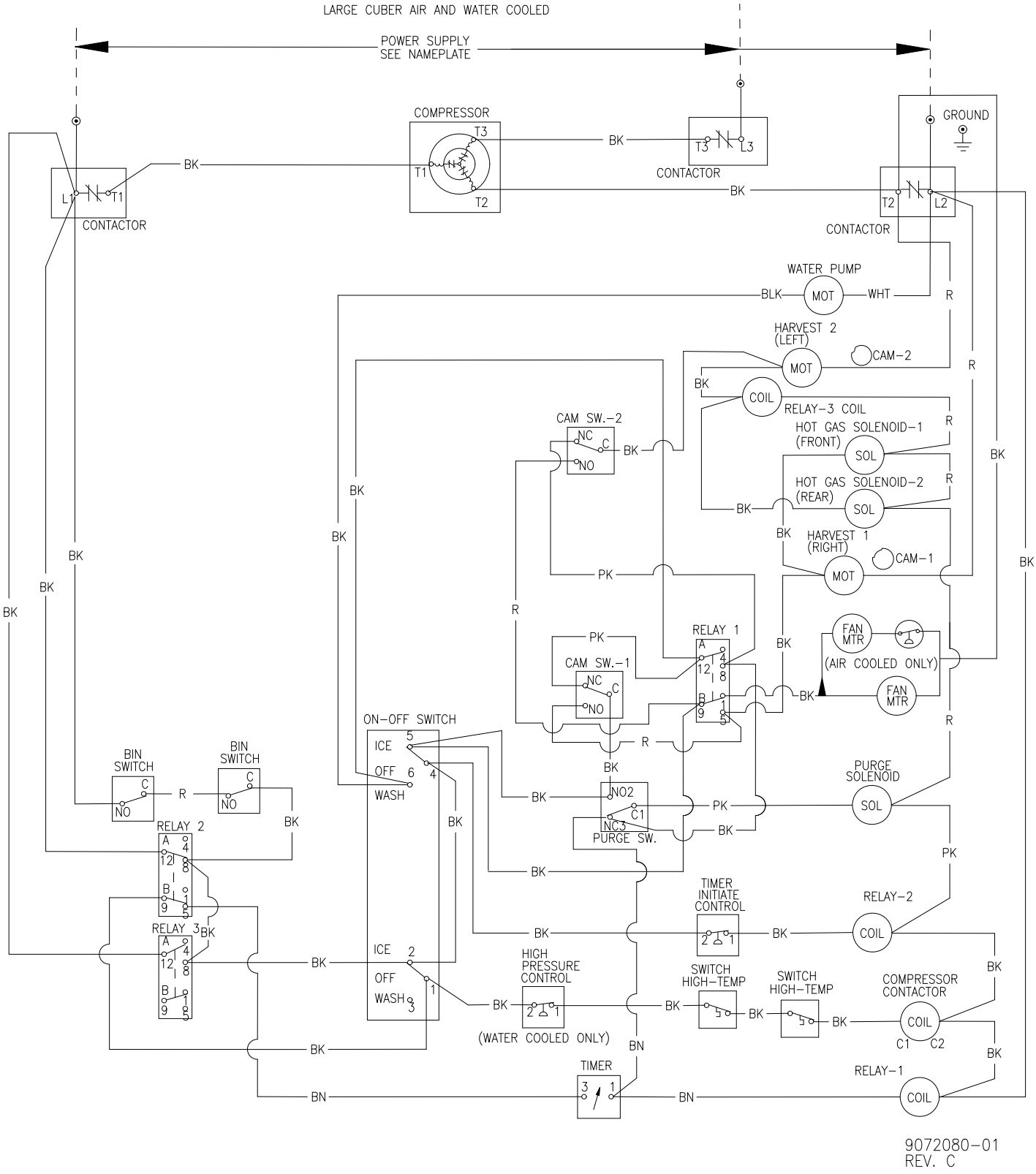

ICE1407A3/W3, ICE1807W3 and ICE2107W3 Wiring Schematic

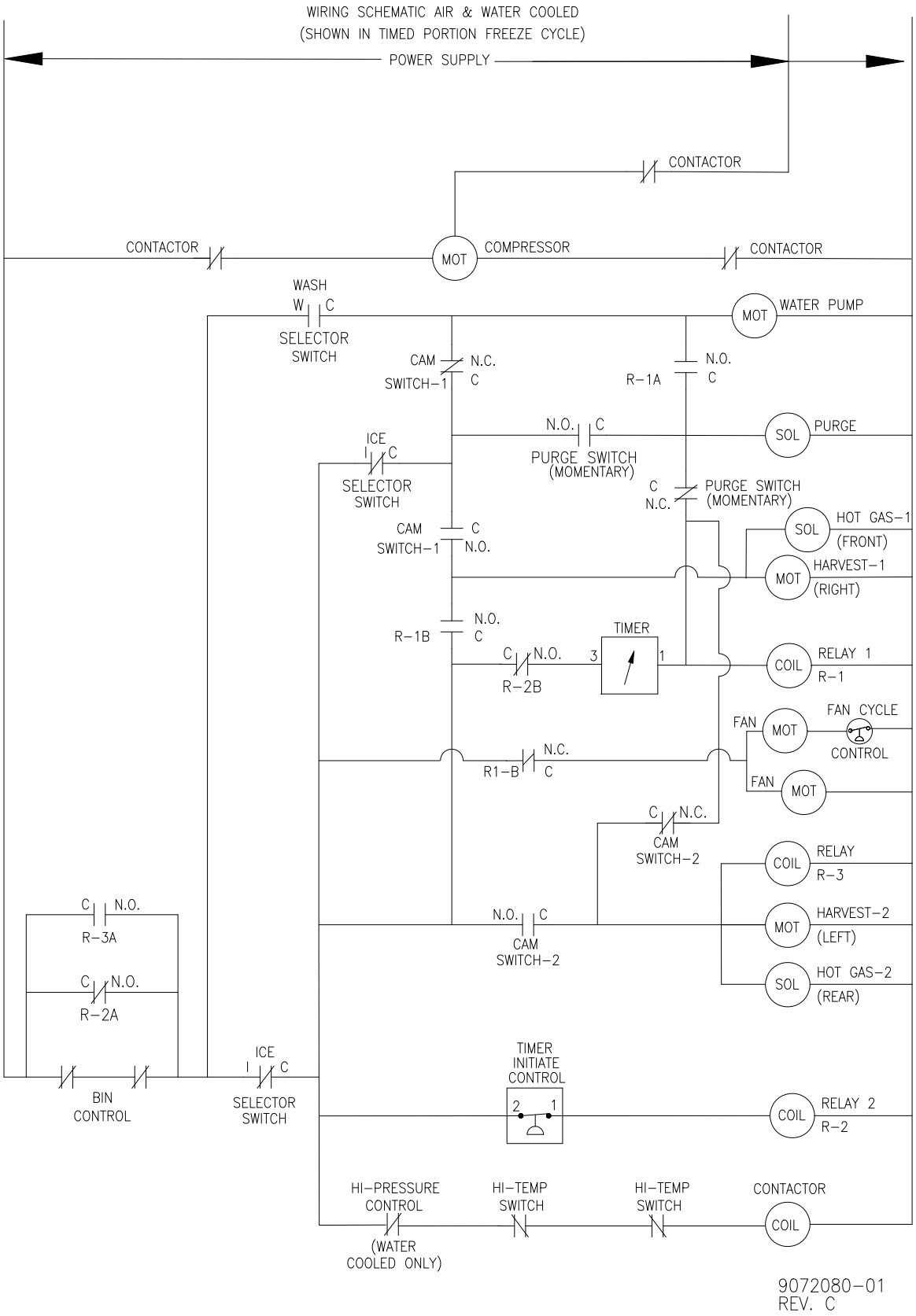

ICE1405/6R3, ICE1806R3 and ICE2106R3 Wiring Diagram

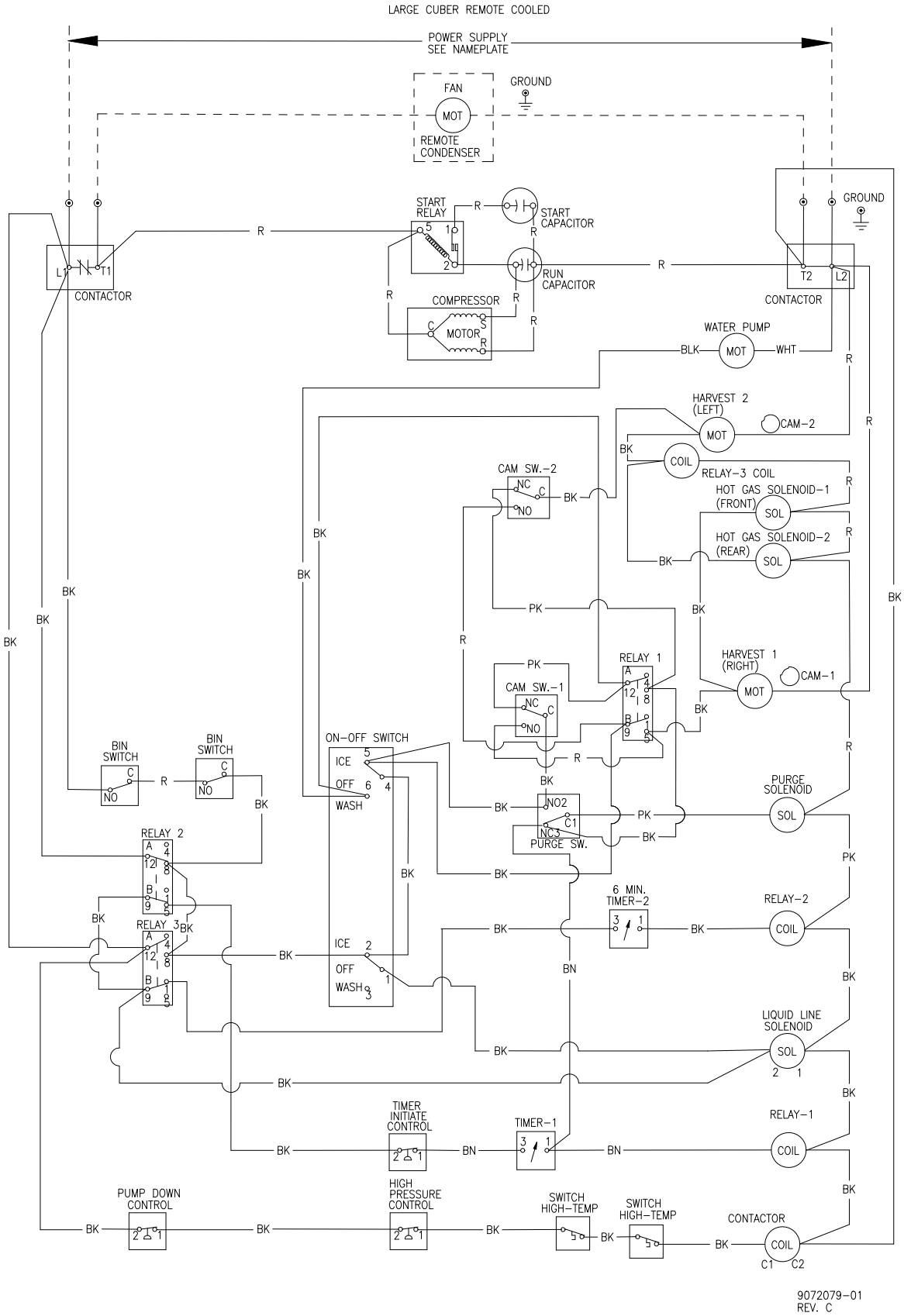

ICE1405/6R3, ICE1806R3 and ICE2106R3 Wiring Schematic

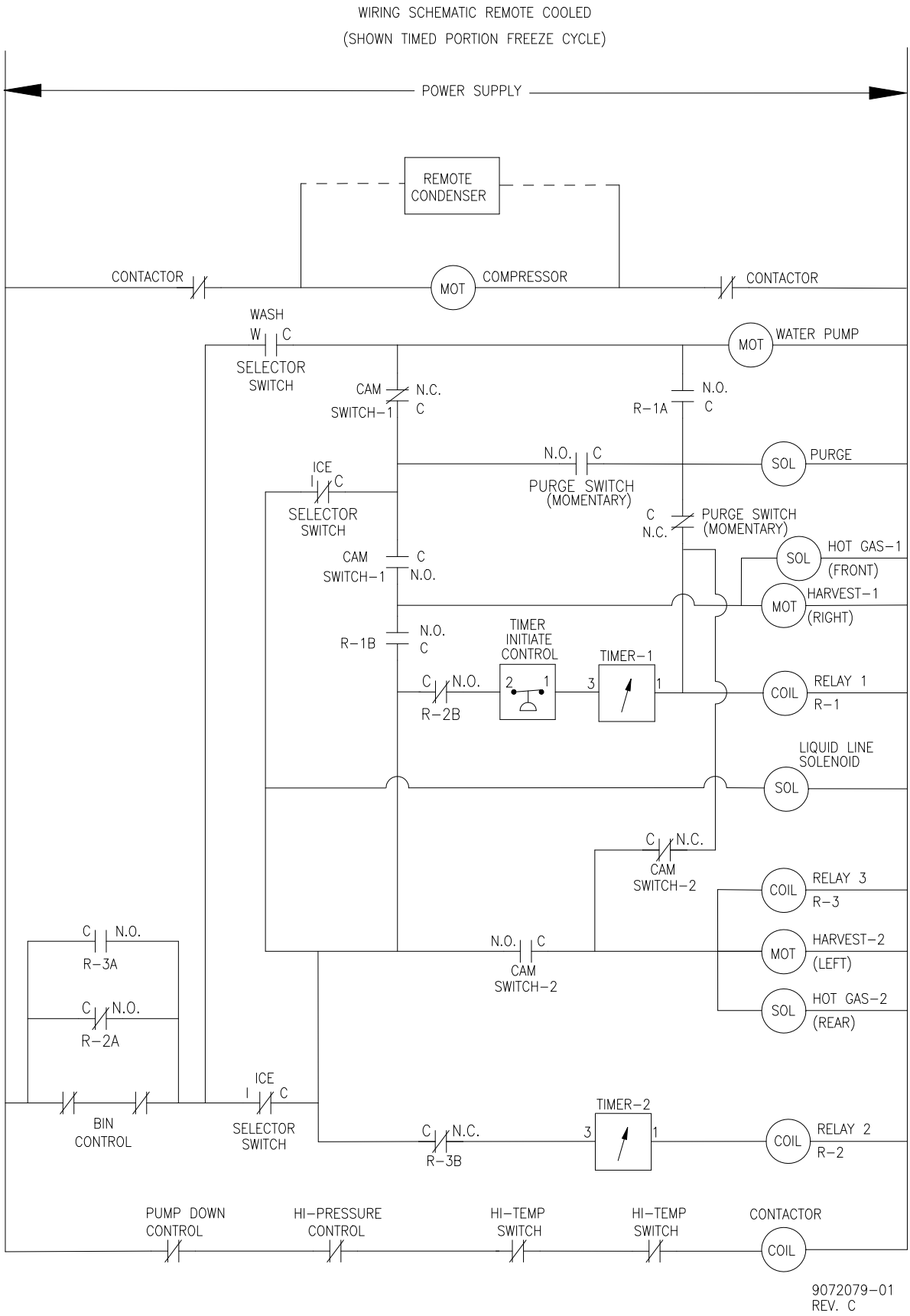

ICE1407R3, ICE1807R3 and ICE2107R3 Wiring Diagram

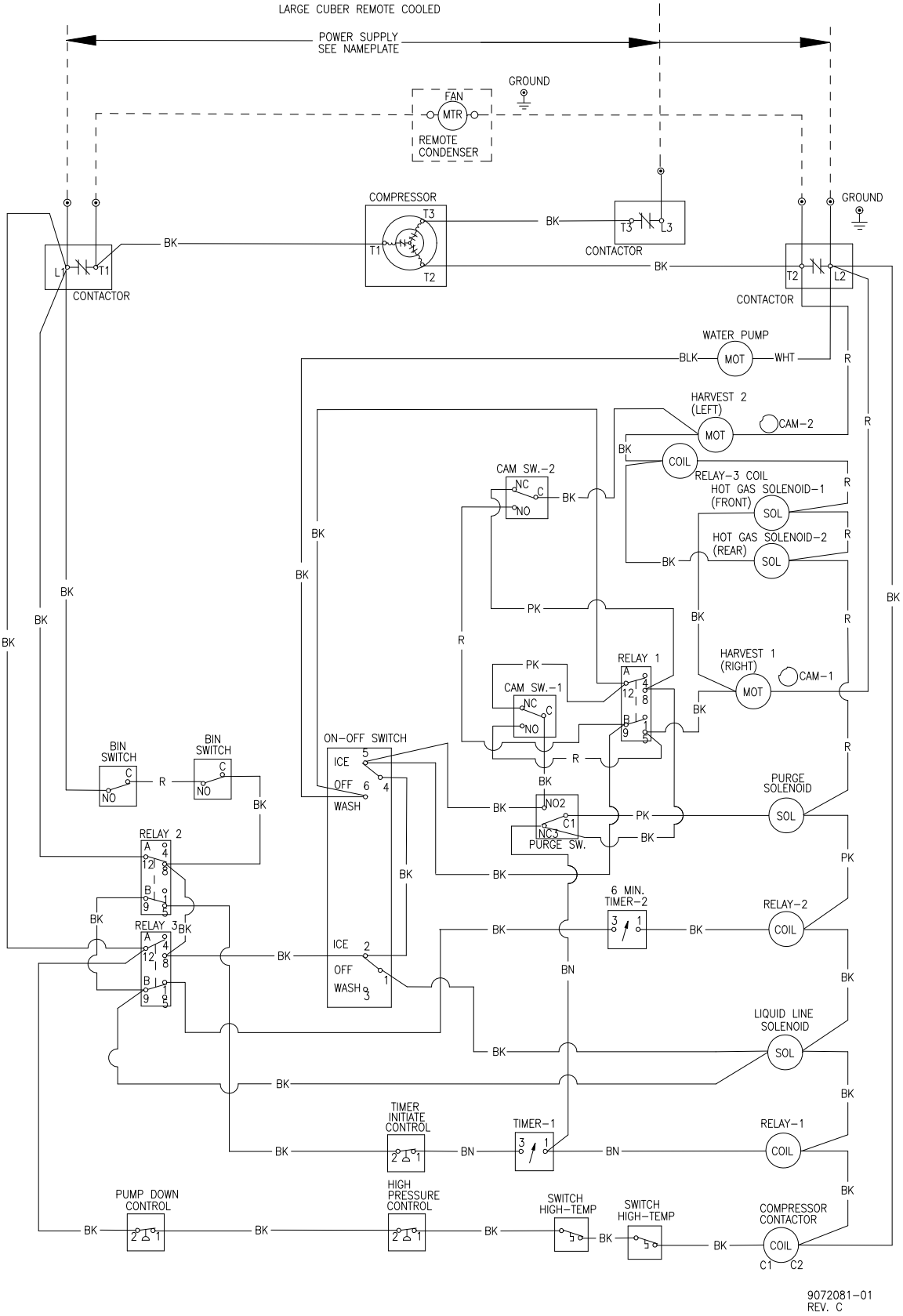

ICE1407R3, ICE1807R3 and ICE2107R3 Wiring Schematic

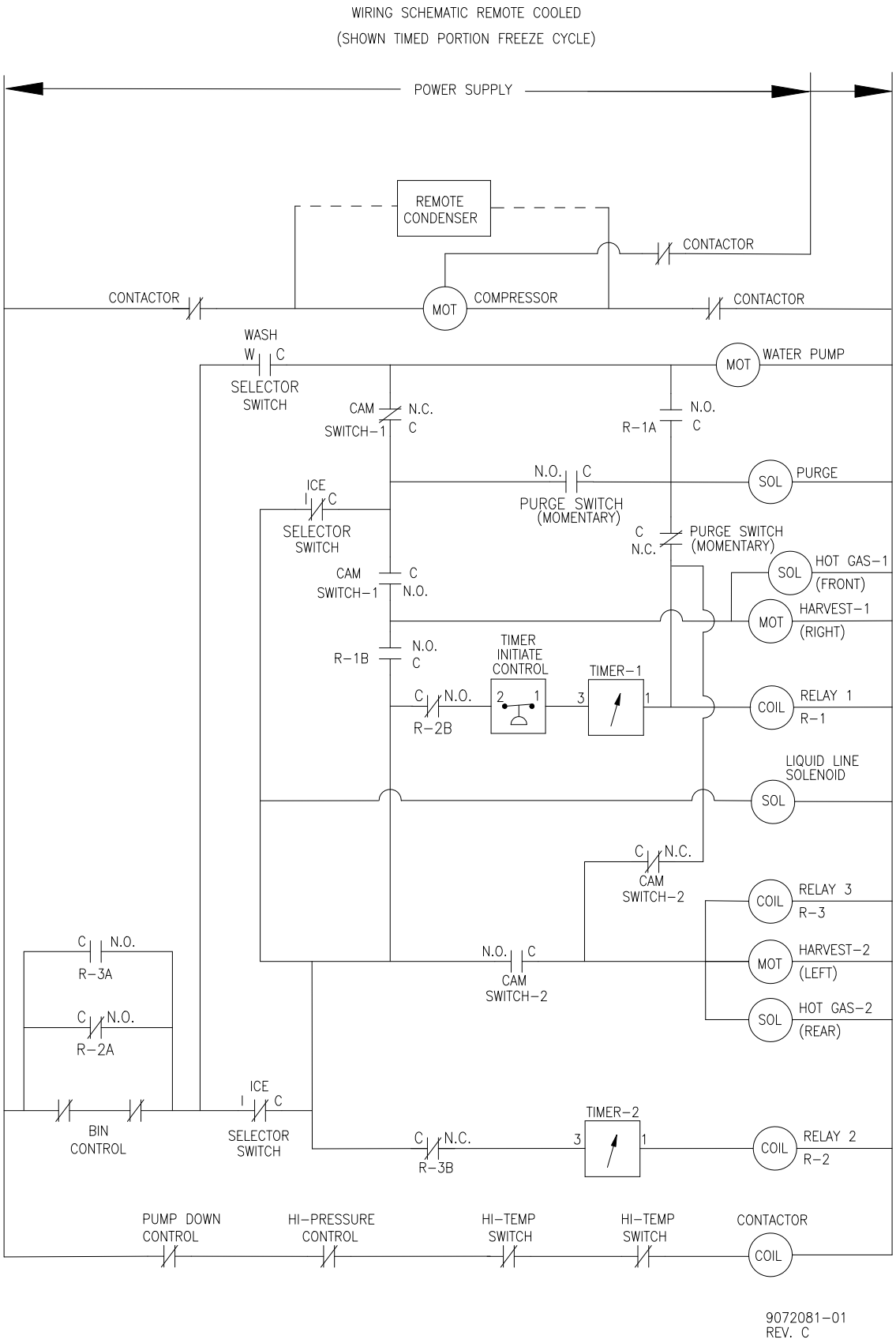

ICE1506R3 Wiring Diagram

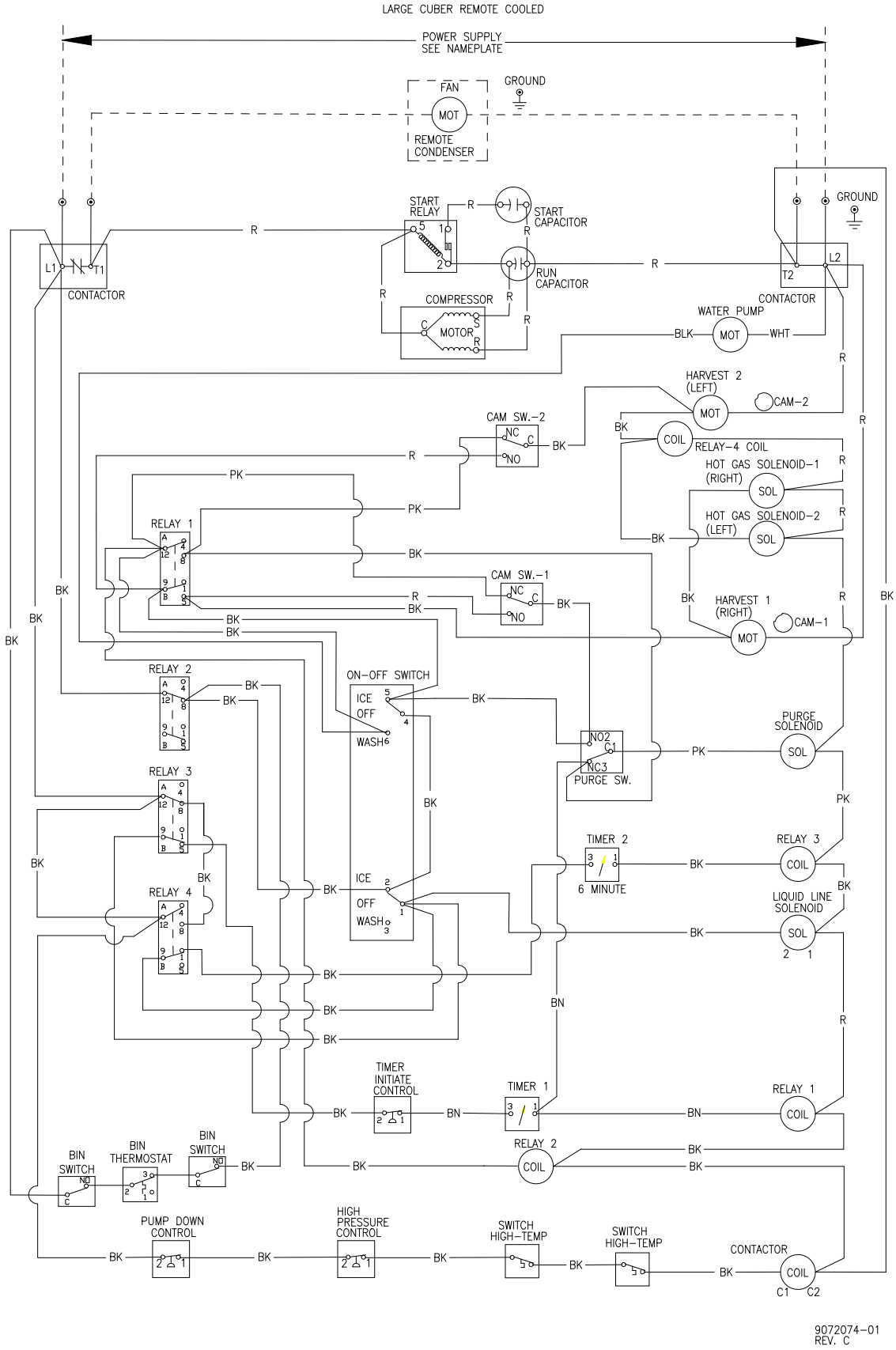

ICE1506R3 Wiring Schematic

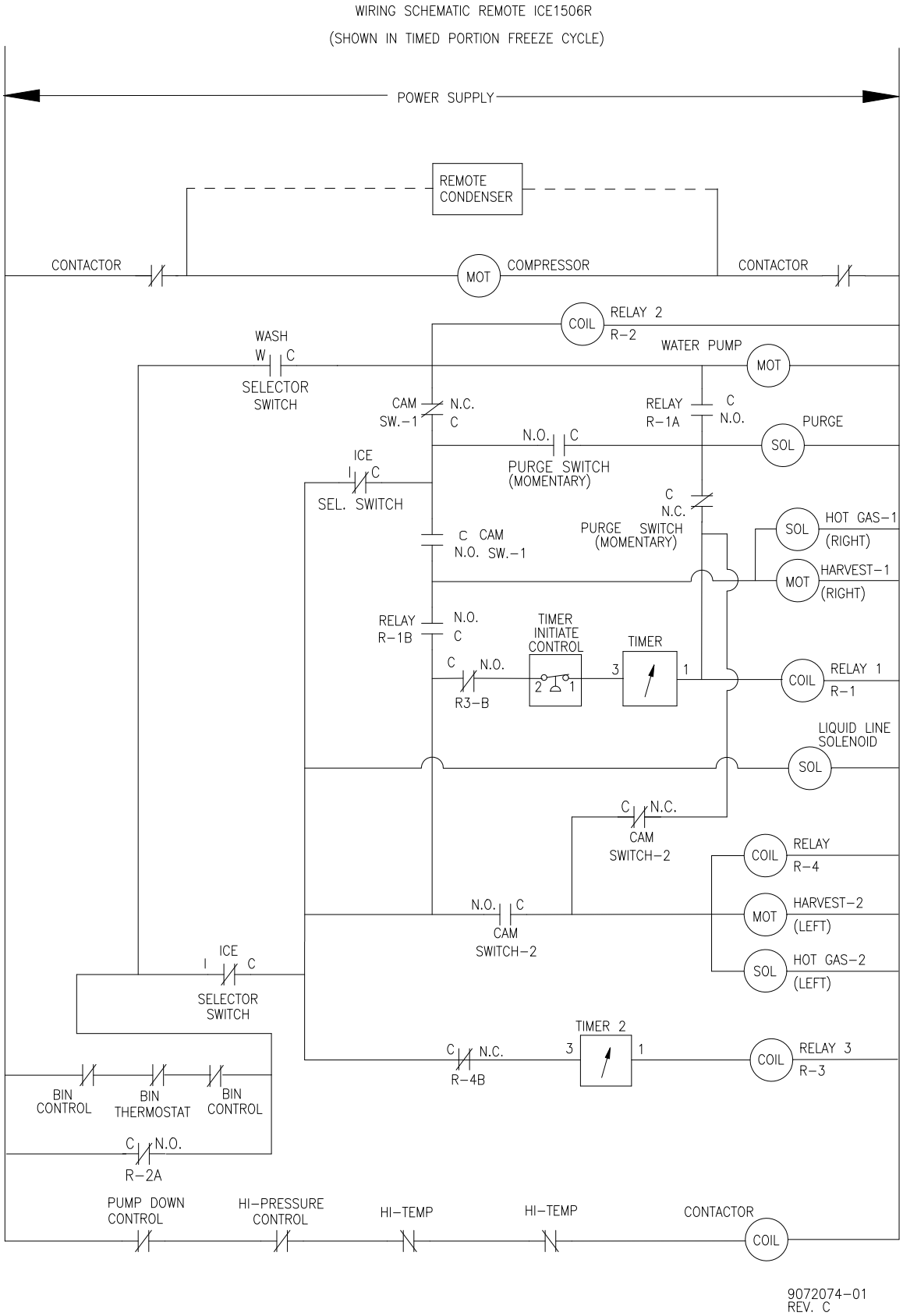

ICE1406/5R, ICE1806R, ICE2106R Wiring Diagram, From Serial Number 09041280010342

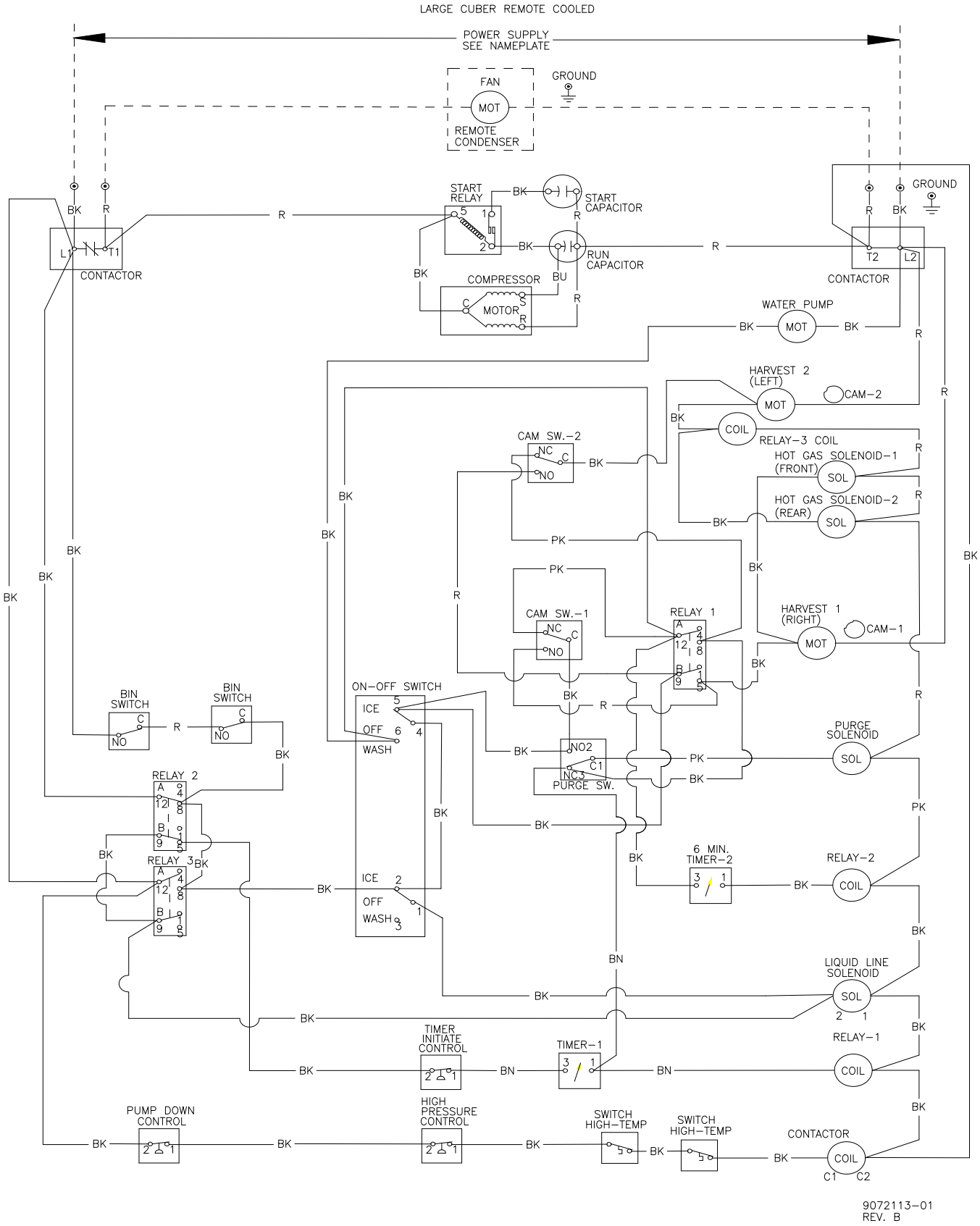

ICE1406/5R, ICE1806R, ICE2106R Wiring Schematic, From Serial Number 09041280010342

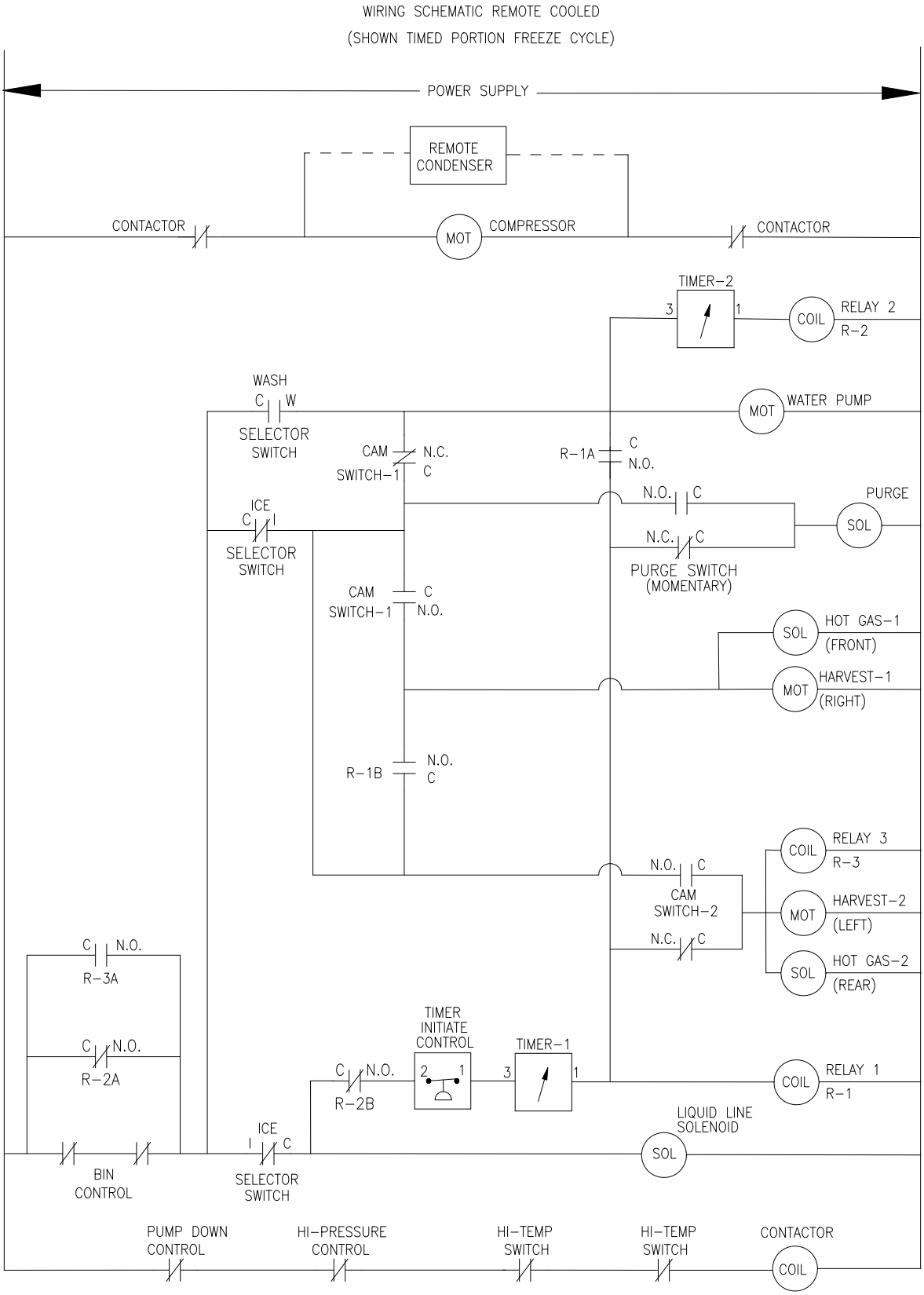

ICE1407R, ICE1807R, ICE2107R Wiring Diagram, From Serial Number 09041280010342

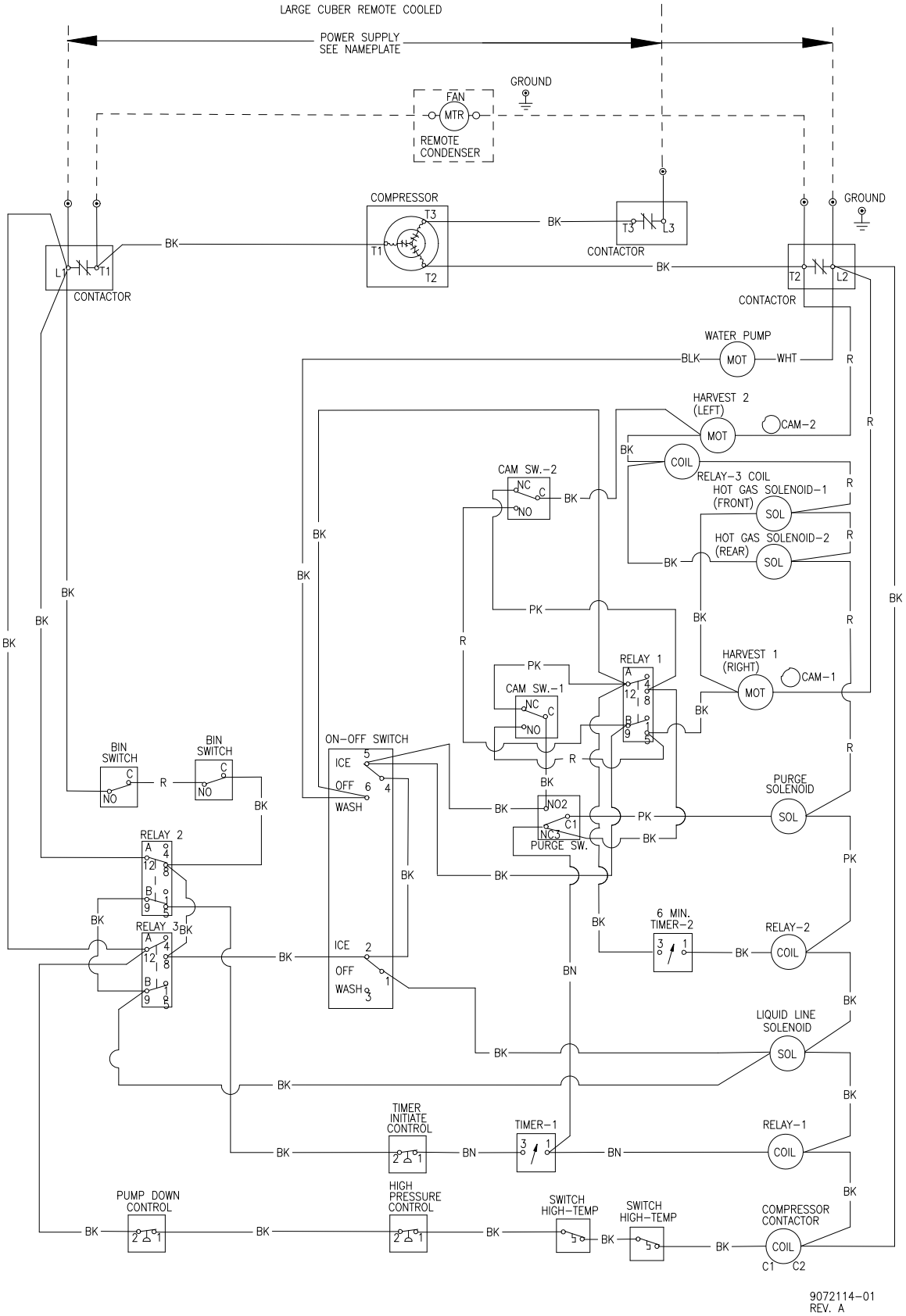

ICE1407R, ICE1807R, ICE2107R Wiring Schematic, From Serial Number 09041280010342

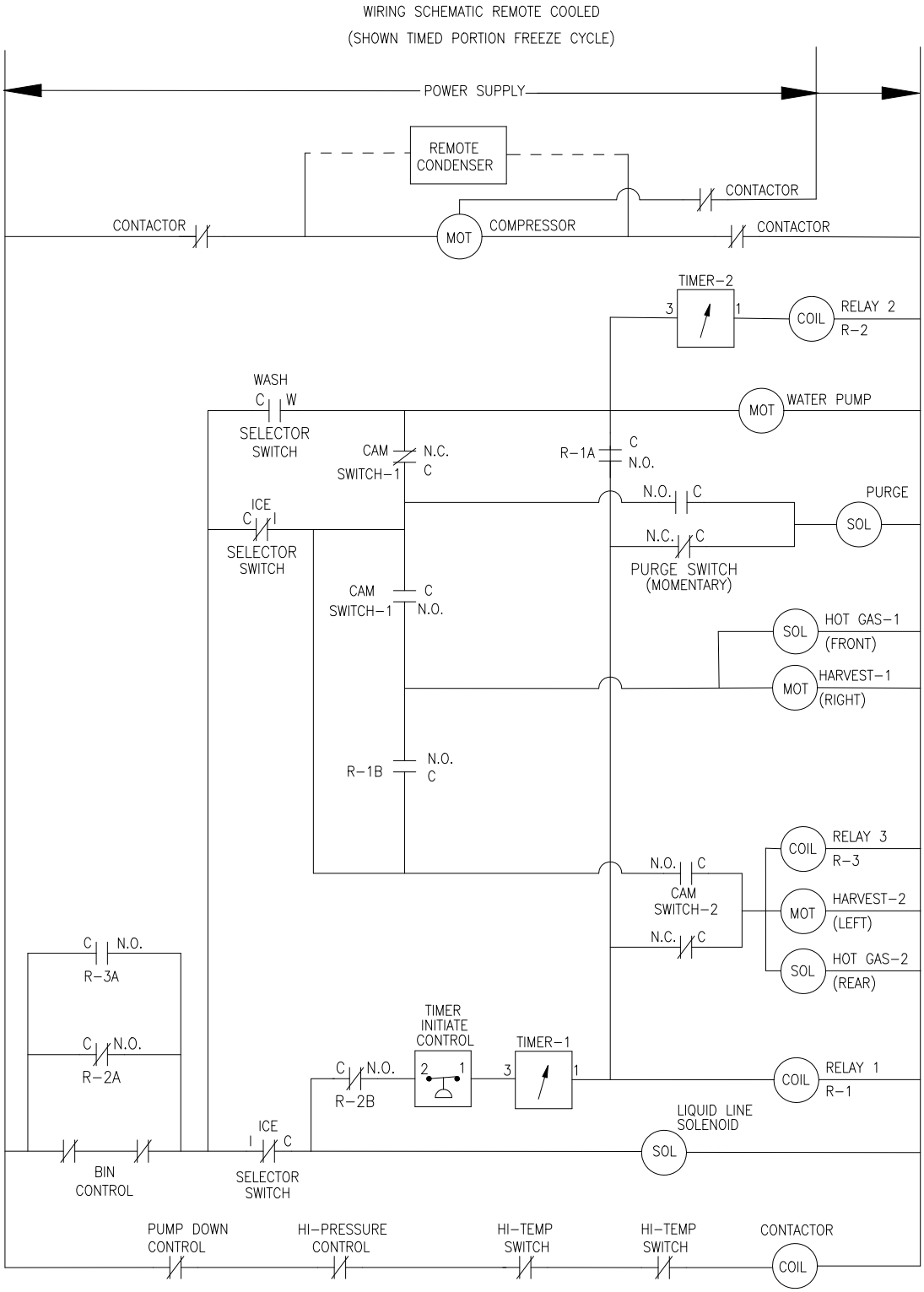

ICE1506R3 Wiring Diagram From Serial Number 09041280010750

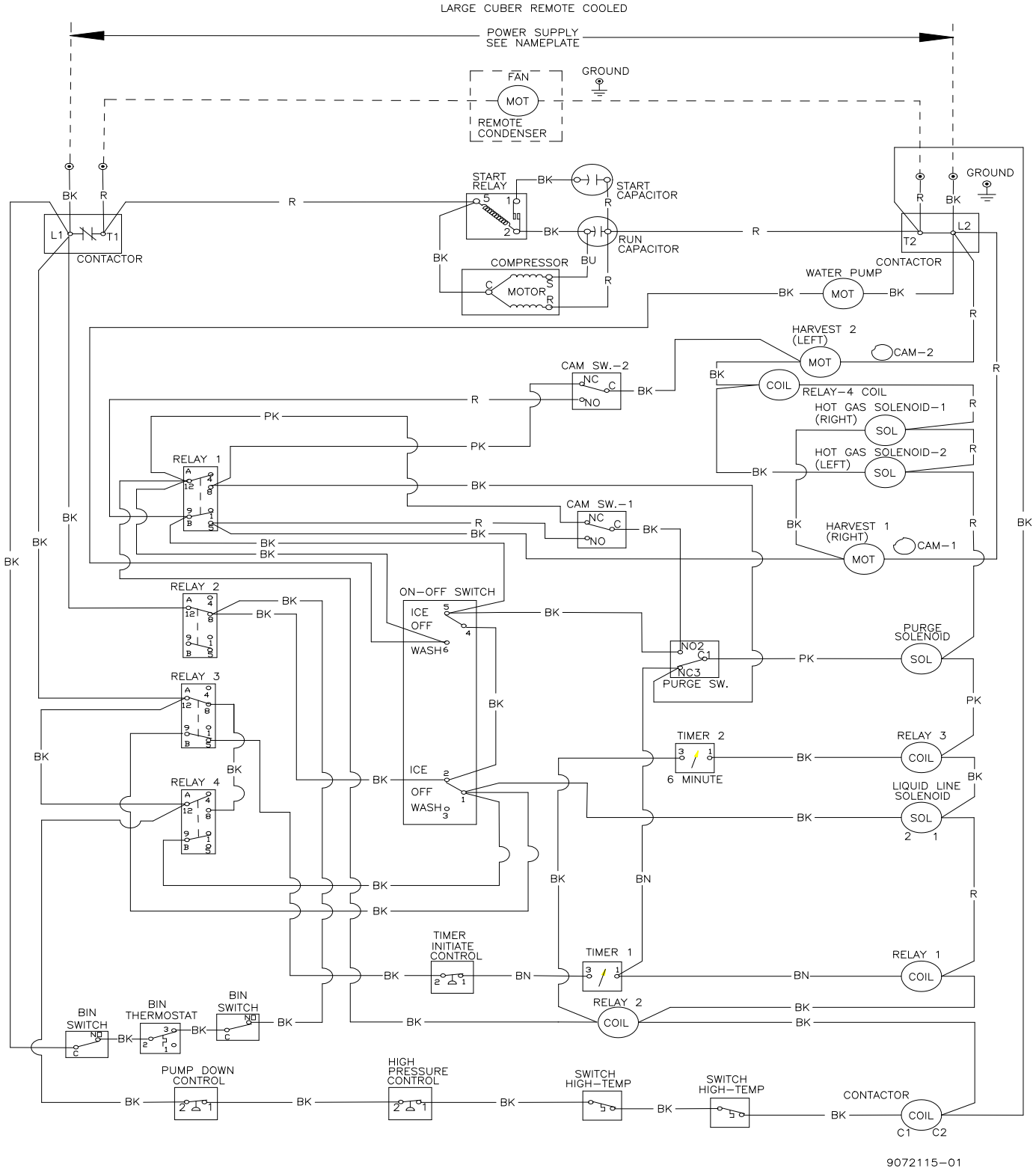

ICE1506R3 Wiring Schematic From Serial Number 09041280010750

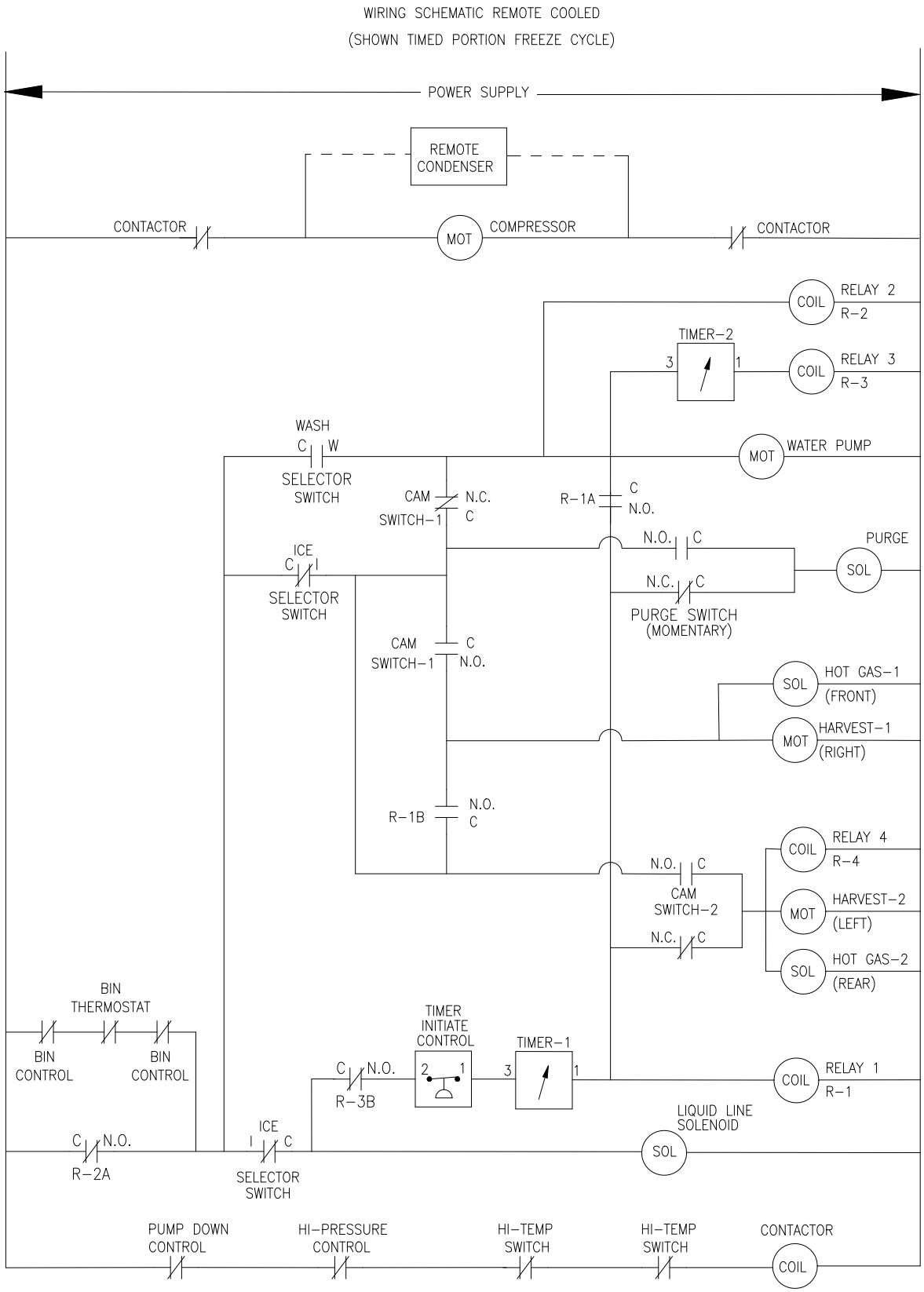

ICEU300A/W Wiring Diagram From Serial Number 10041280011405

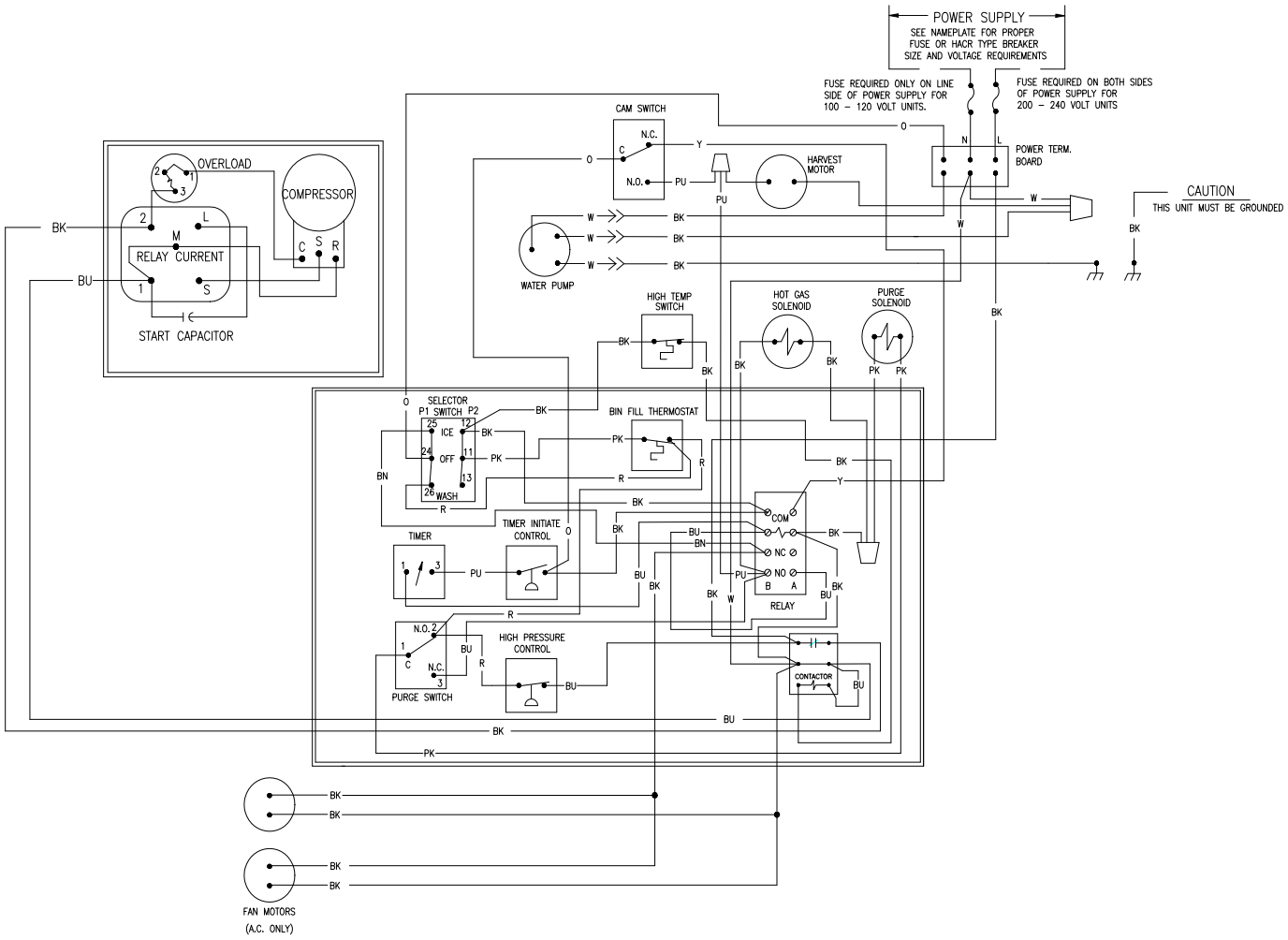

ICEU300 A/W Wiring Schematic From Serial Number 10041280011405

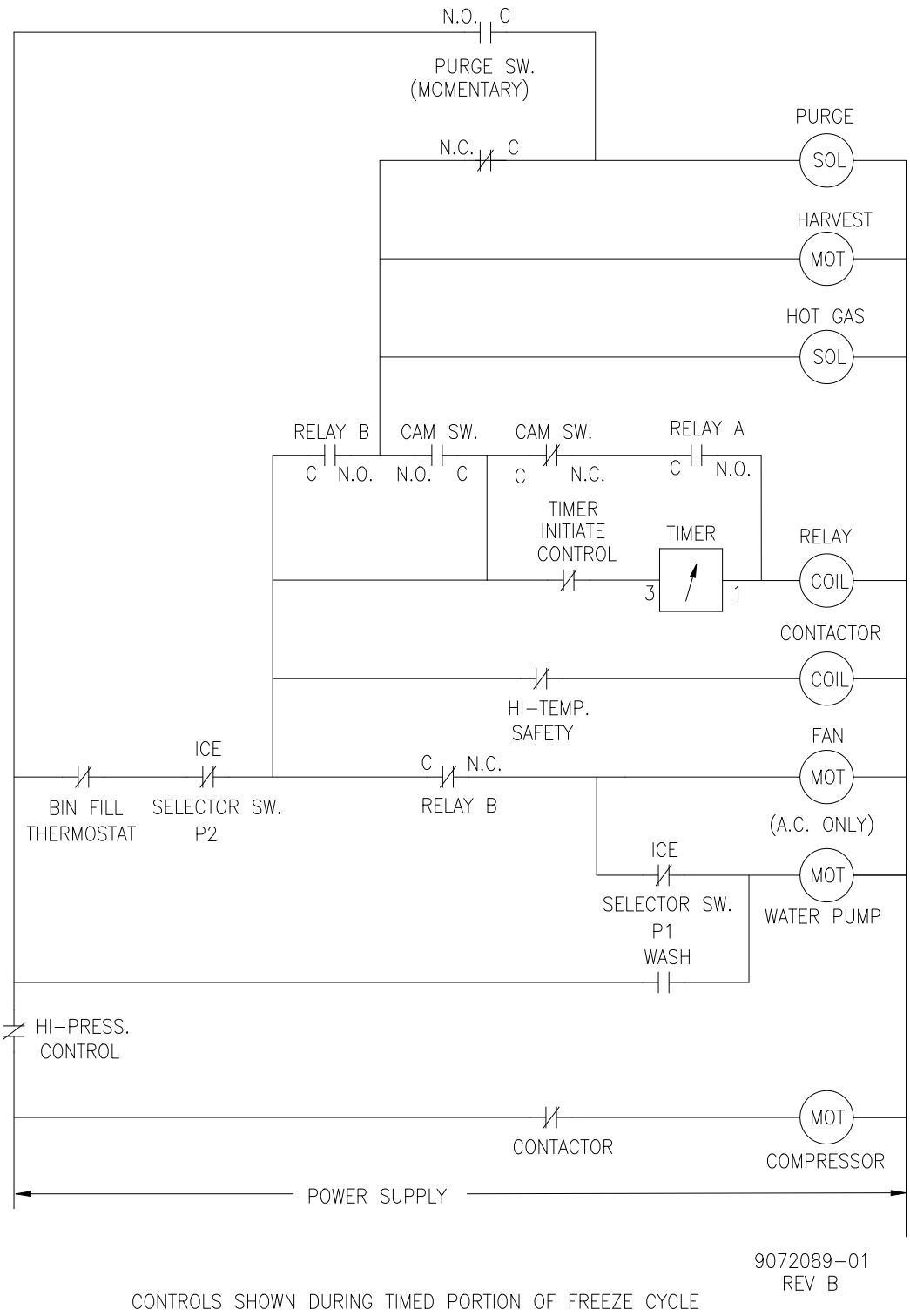

CONTROLS SHOWN DURING TIMED PORTION OF FREEZE CYCLE

ICEU150-220-225-226 A/W Wiring Diagram From Serial Number 10041280011405

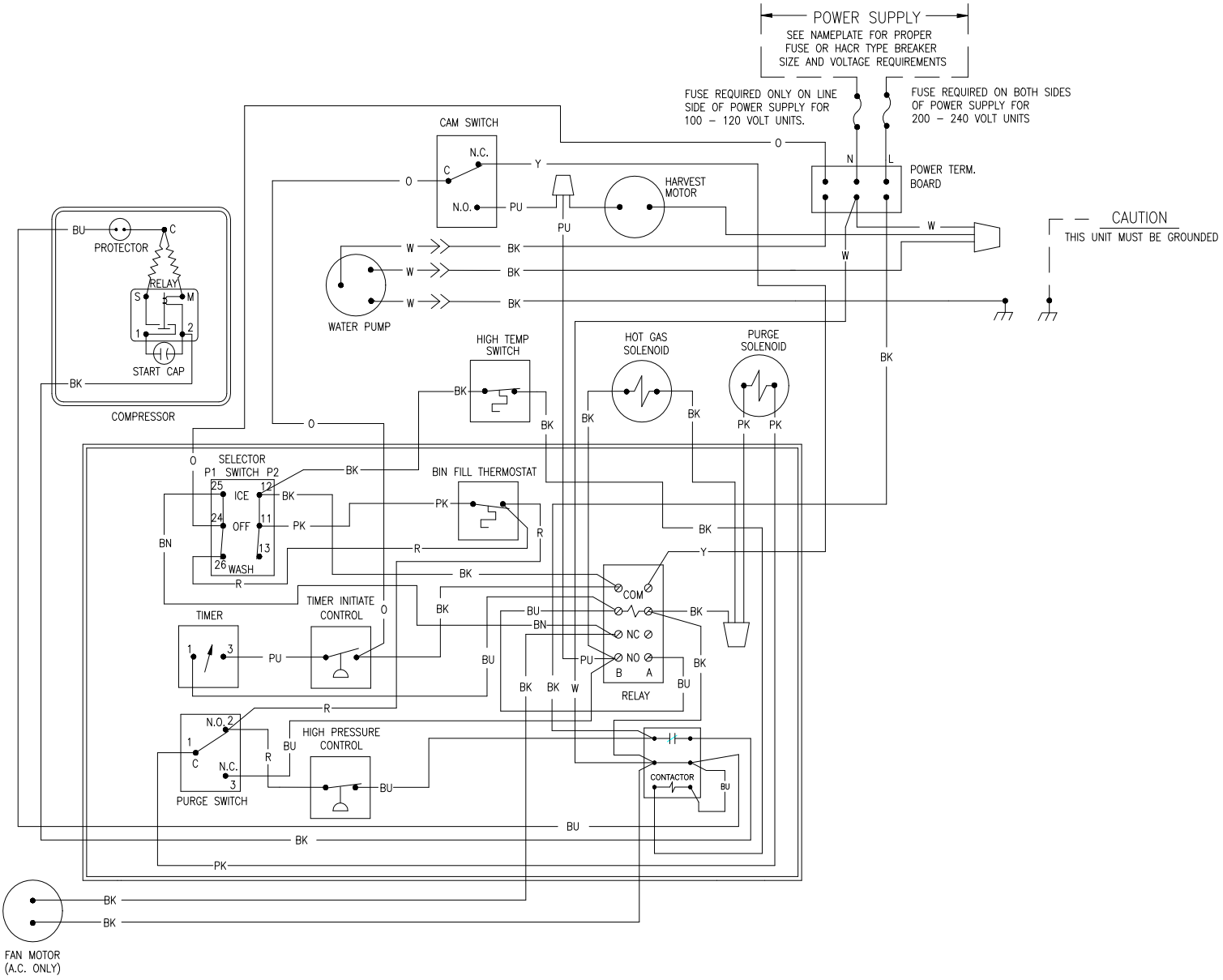

ICEU150-220-225-226 A/W Wiring Schematic From Serial Number 10041280011405

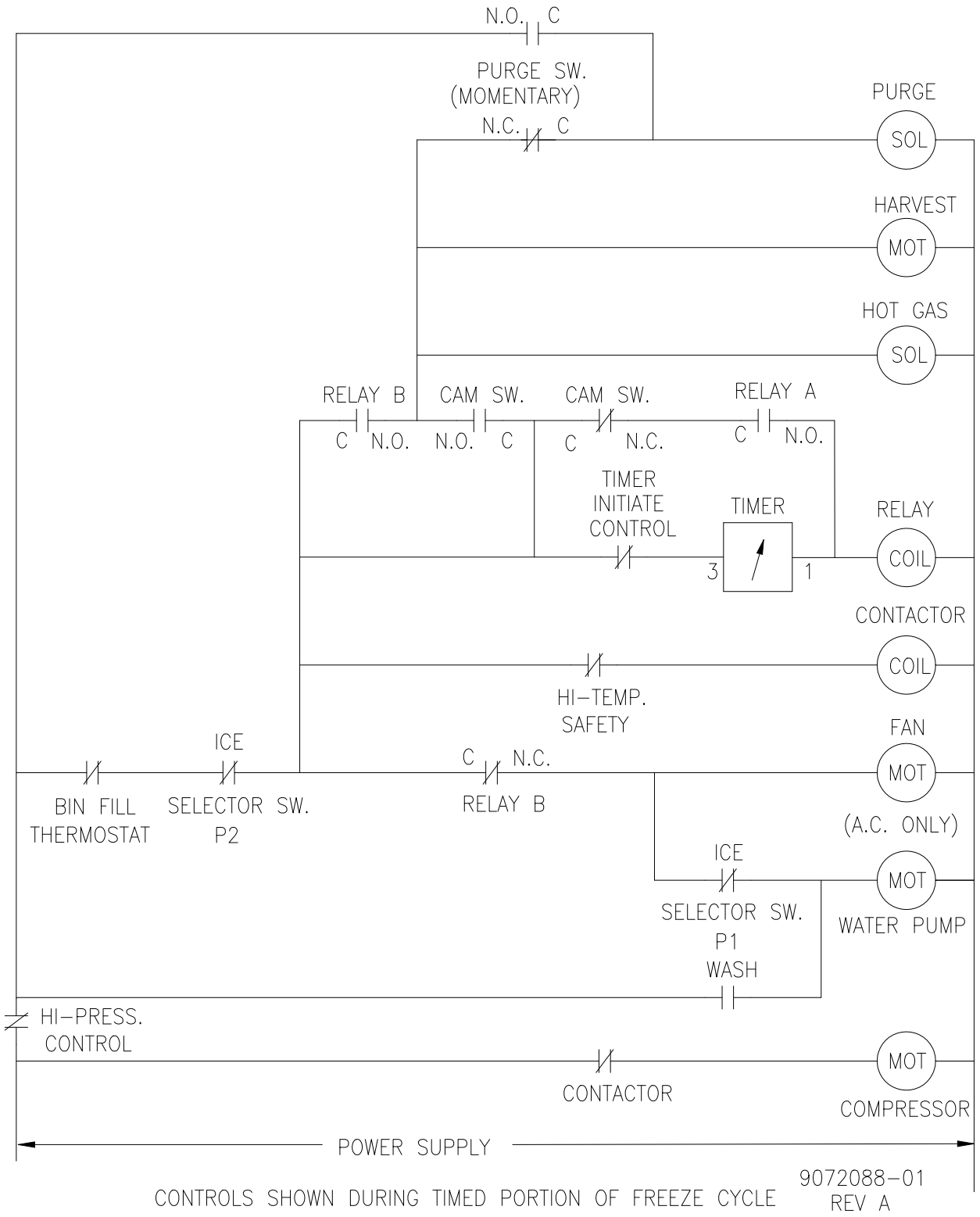

ICEU305A/W Wiring Diagram From Serial Number 10041280011405

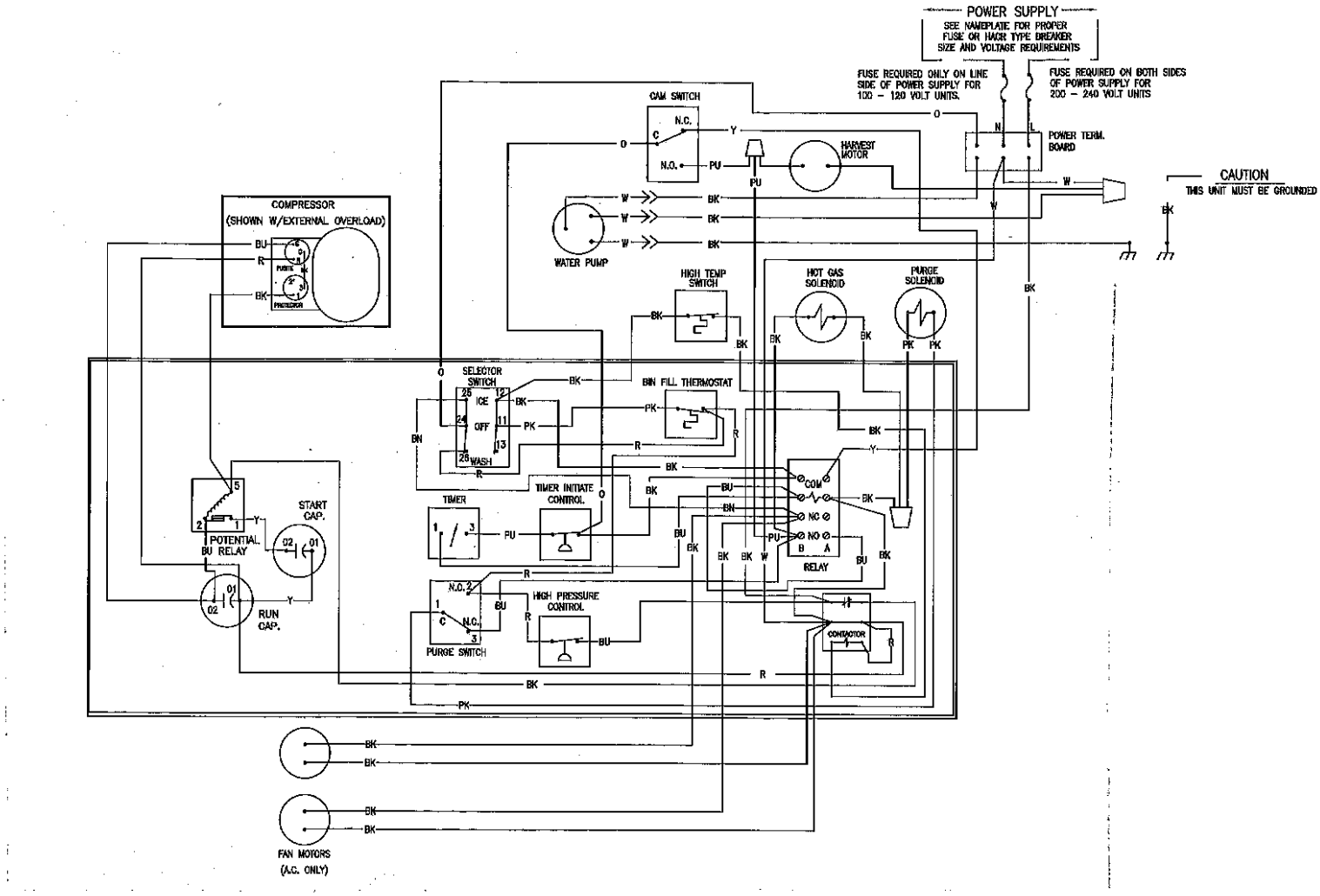

ICEU305 A/W Wiring Schematic From Serial Number 10041280011405

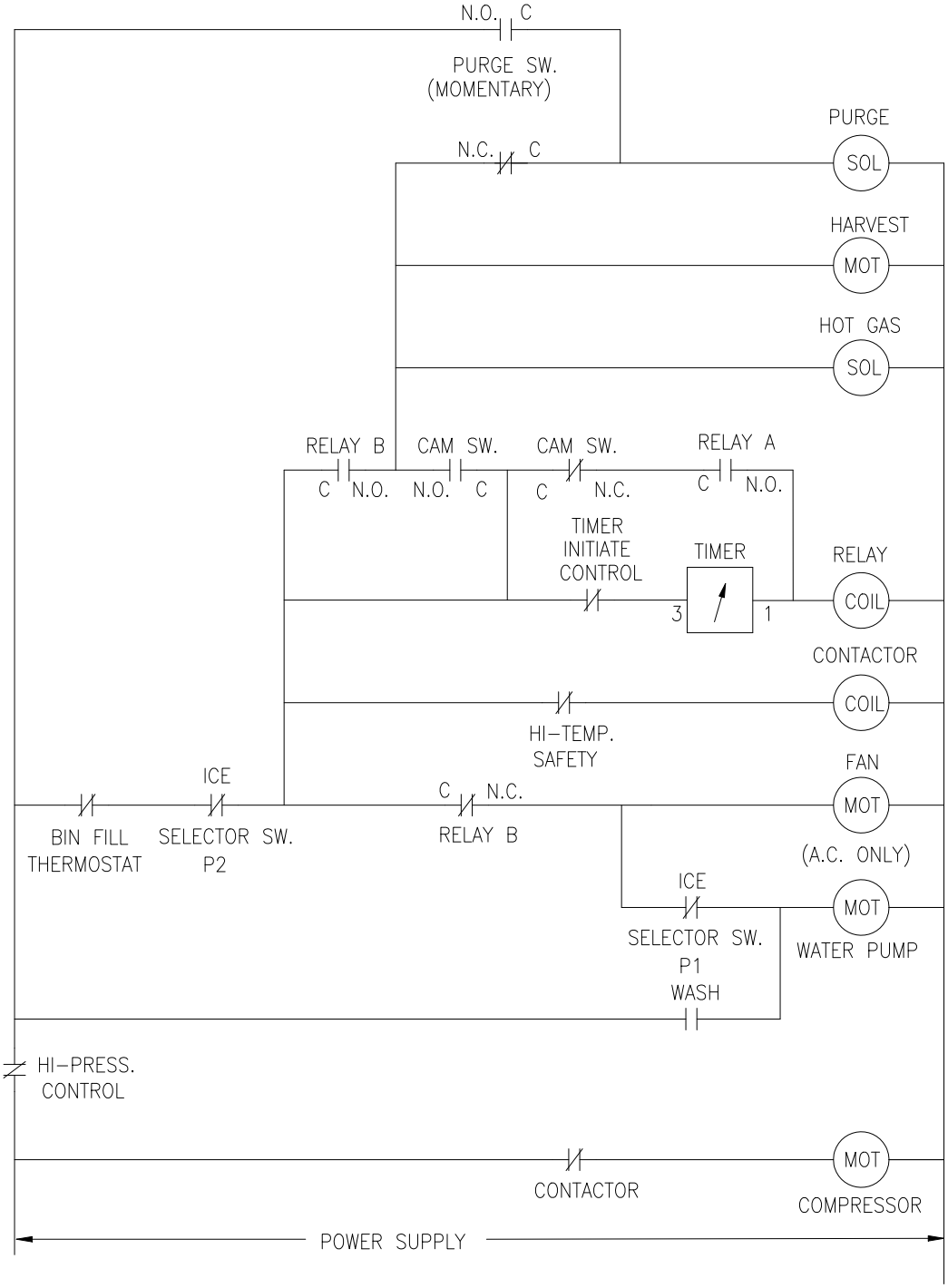

CONTROLS SHOWN DURING TIMED PORTION OF FREEZE CYCLE

ICE0400A5/400T6 Wiring Diagram

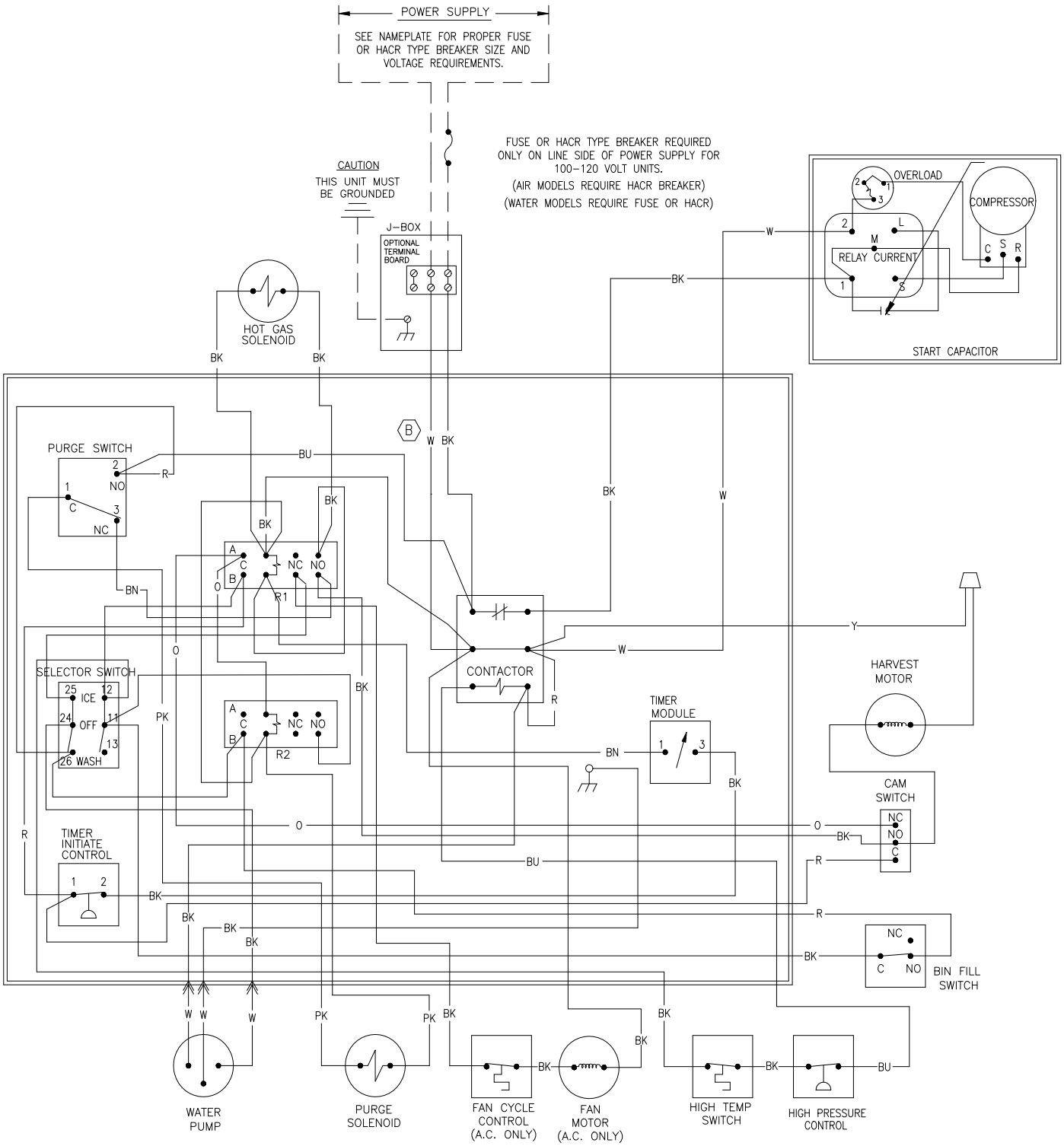

ICE0400A5/400T6 Wiring Schematic

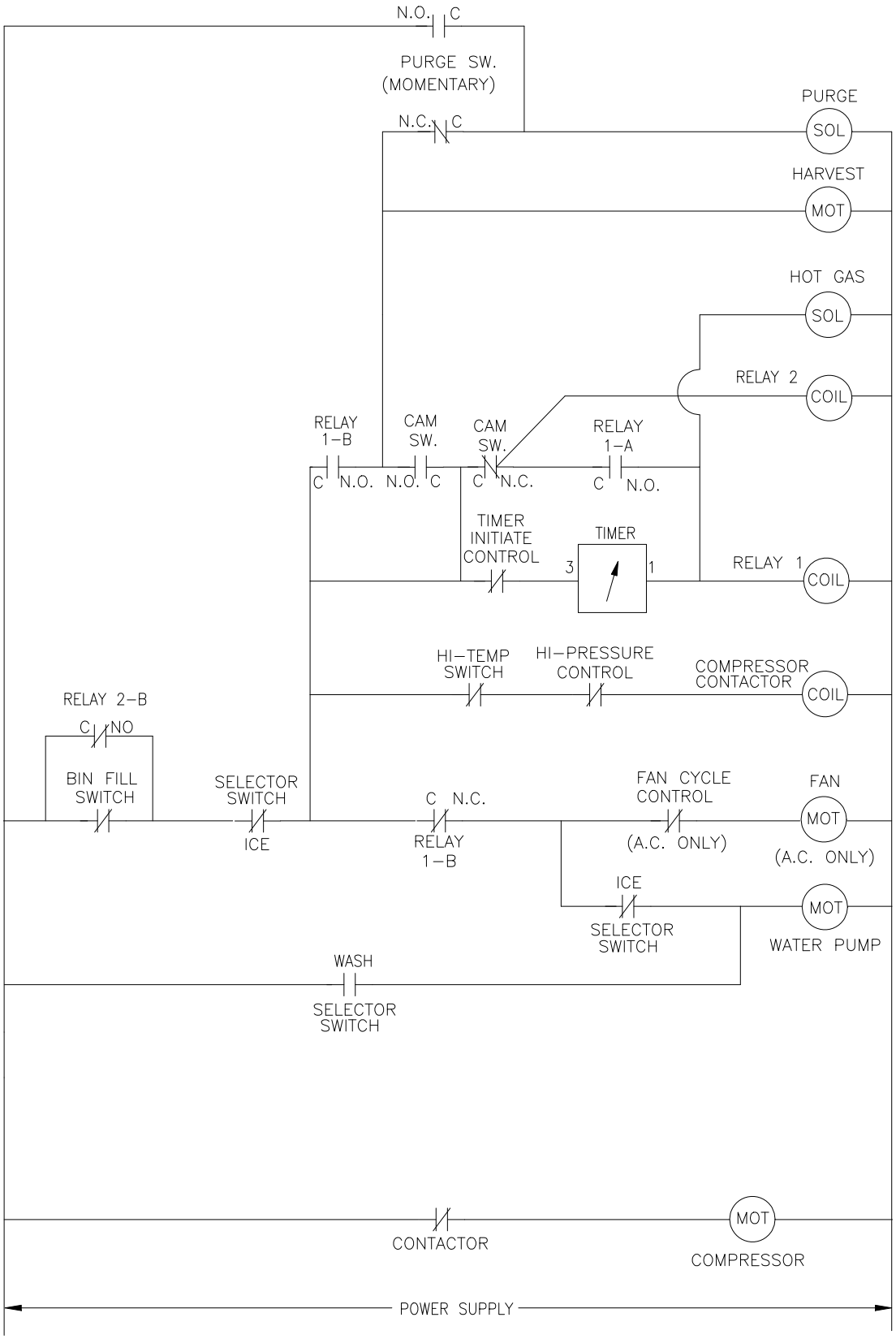

ICE0500A5/500T6 Wiring Diagram

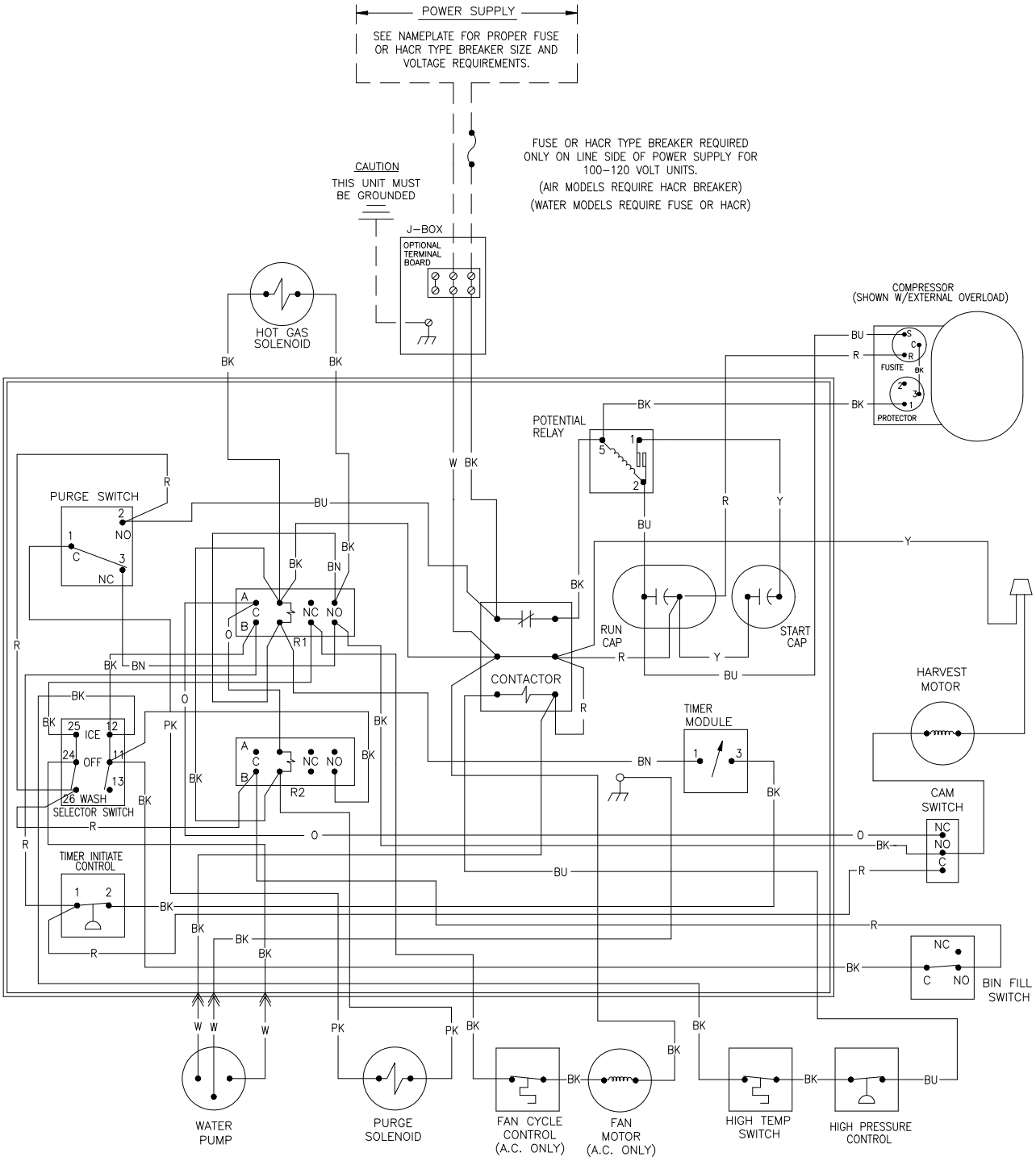

ICE0500A5/500T6 Wiring Schematic

WIRING SCHEMATIC
AIR & WATER
(SHOWN IN TIMED PORTION FREEZE CYCLE)

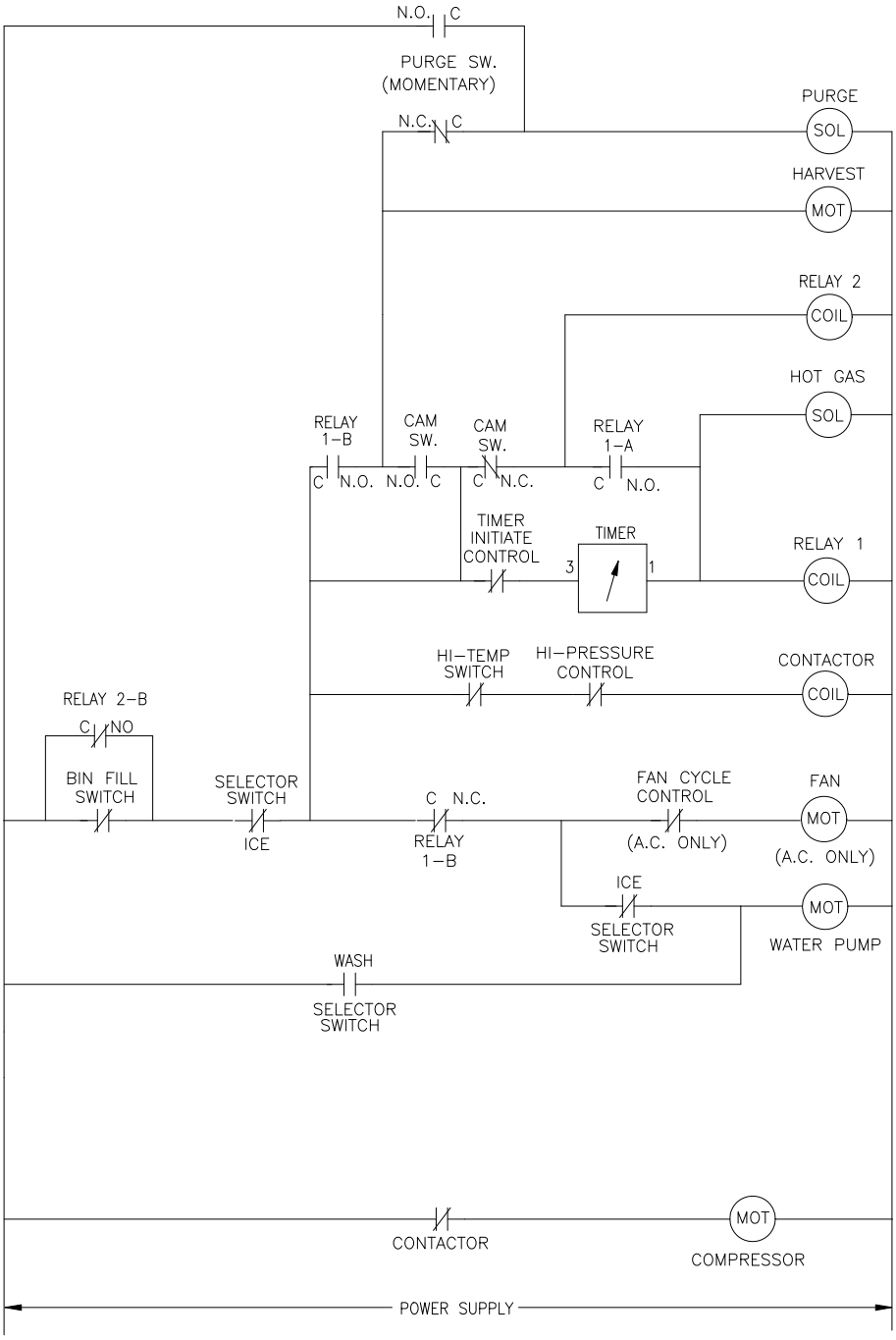

ICE0606A5/606T6 Wiring Diagram

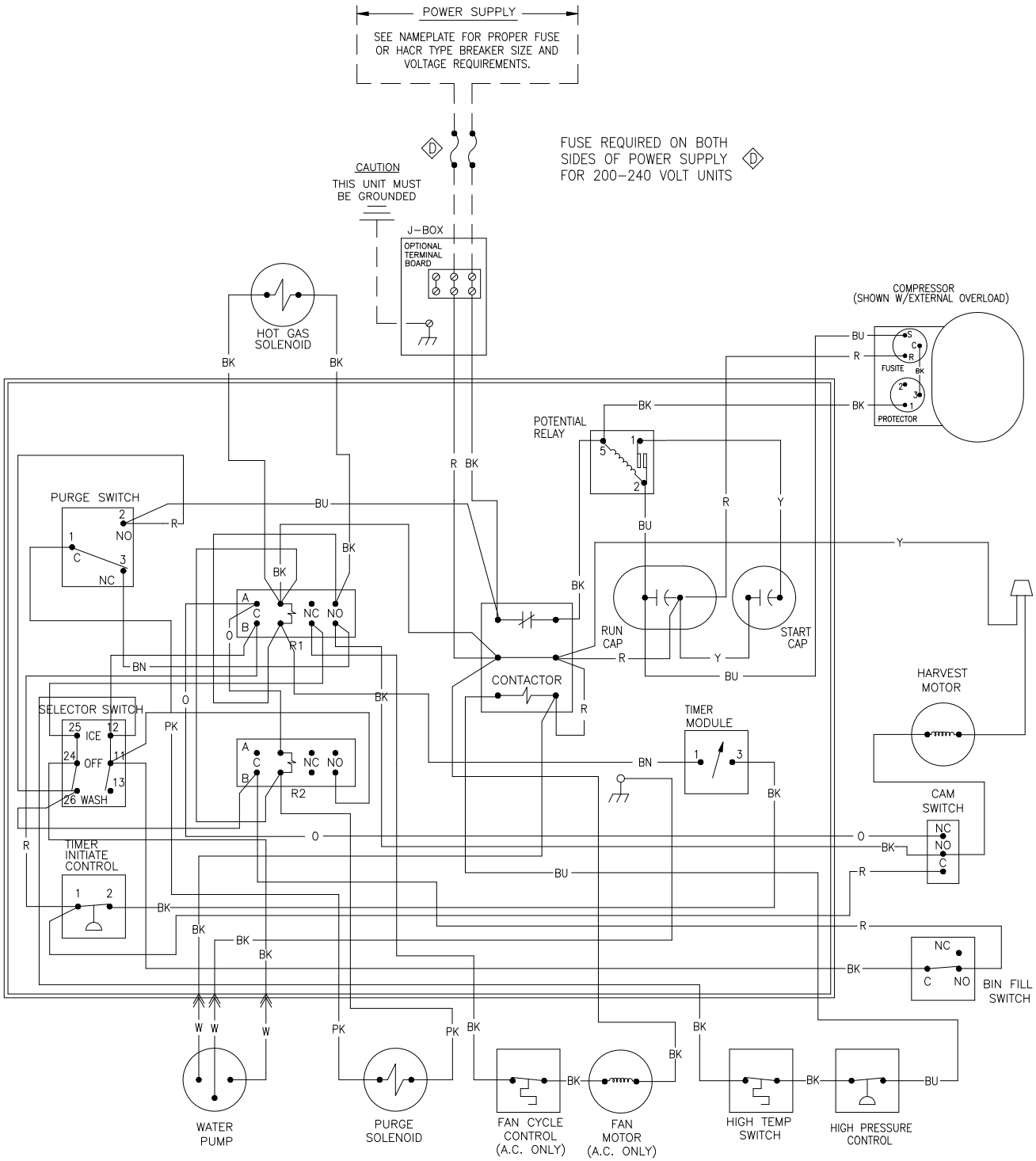

ICE0606A5/606T6 Wiring Schematic

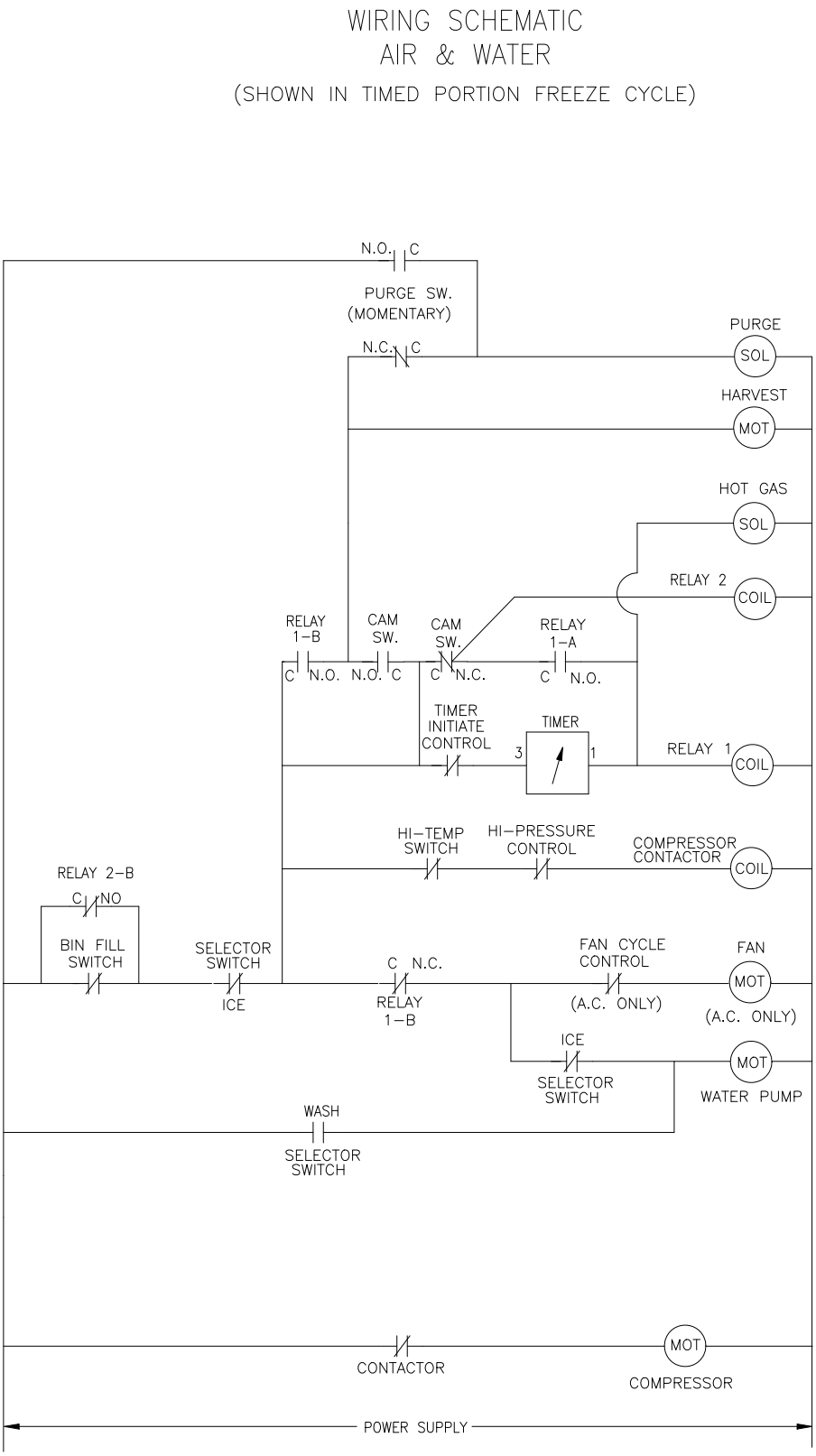

ICE0606R6/605R6 Wiring Diagram

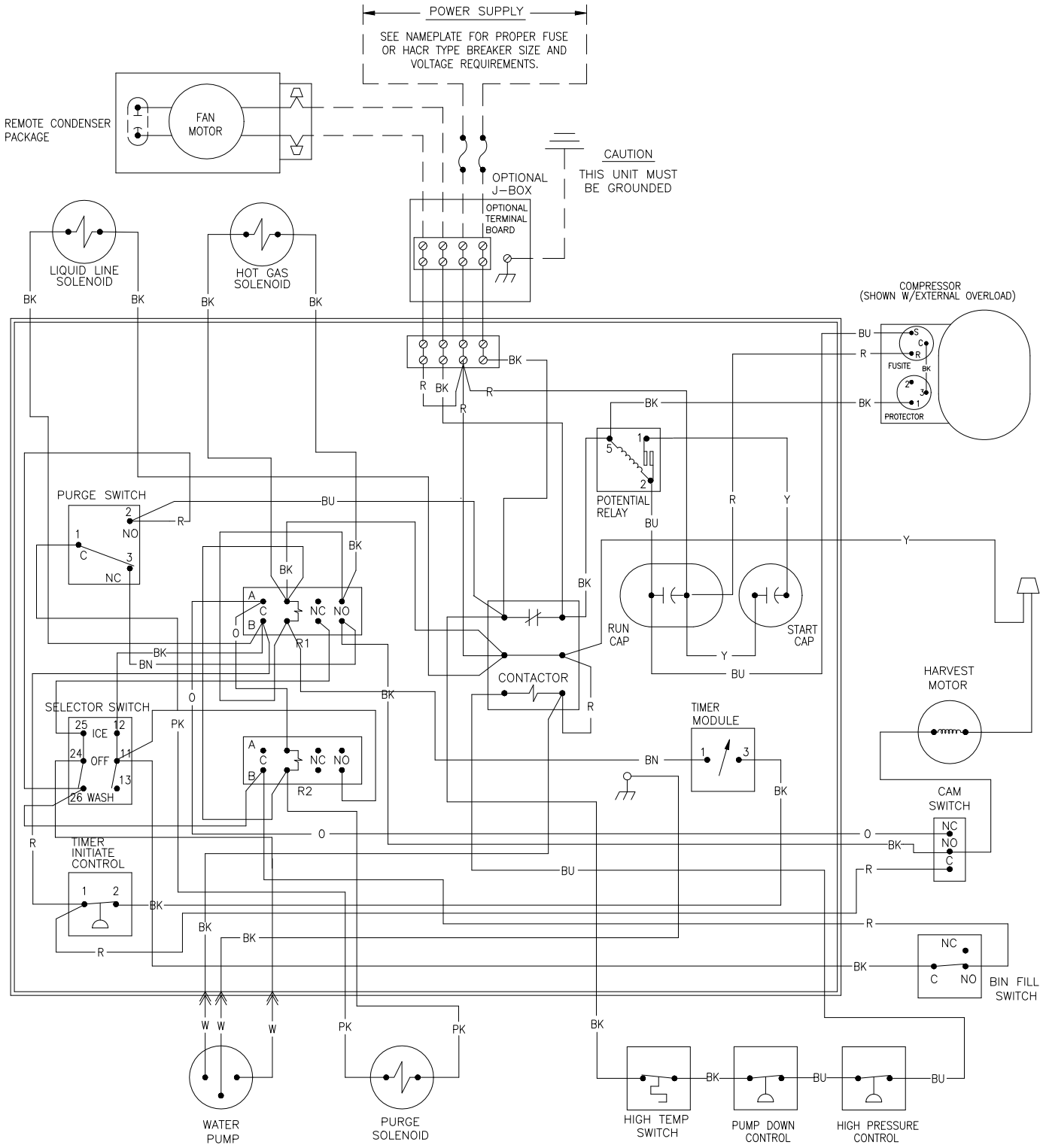

ICE0606R6/605R6 Wiring Schematic

WIRING SCHEMATIC
REMOTE
(SHOWN IN TIMED PORTION FREEZE CYCLE)

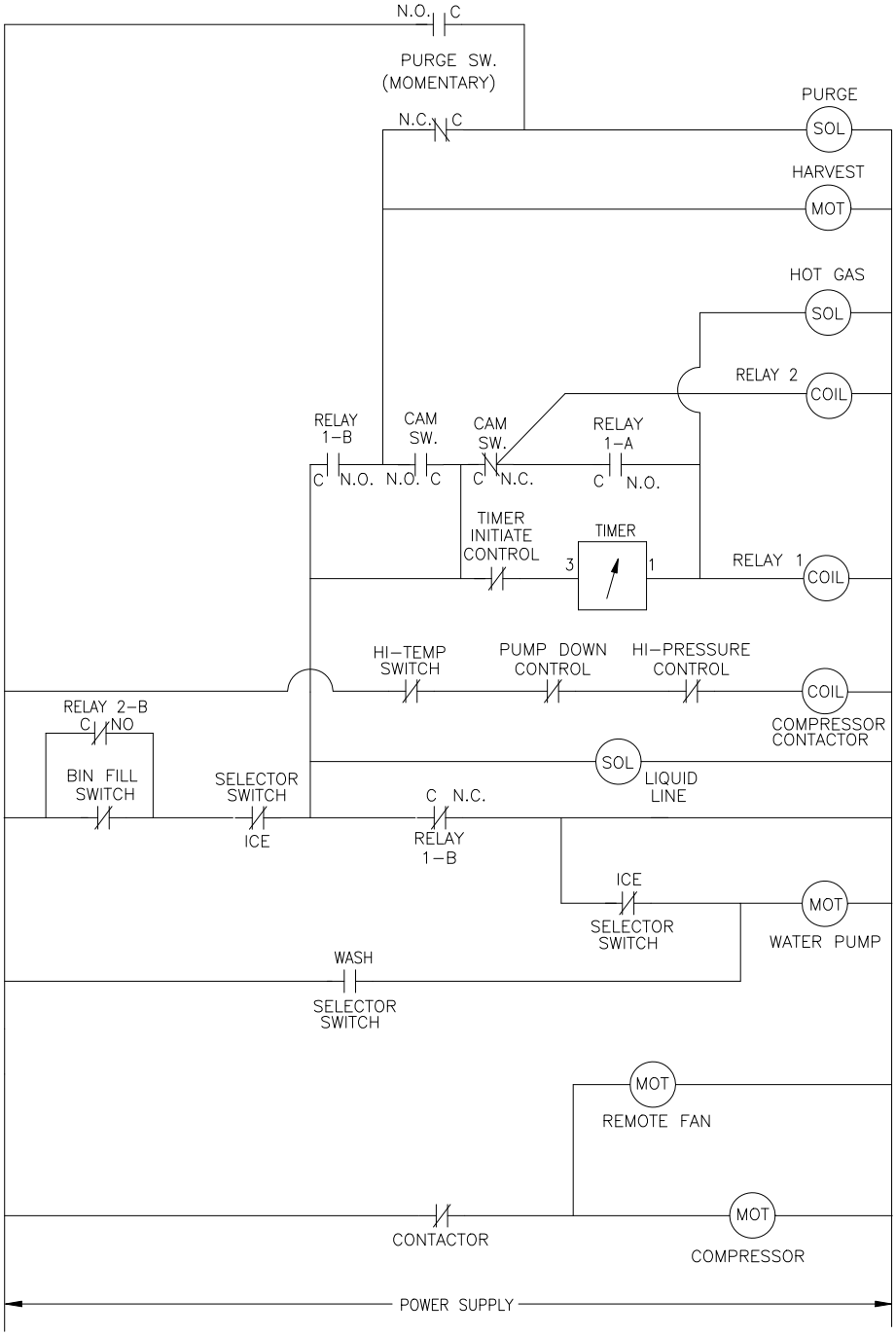

ICE1006A5-W4/ICE0806A5-W5 Wiring Diagram

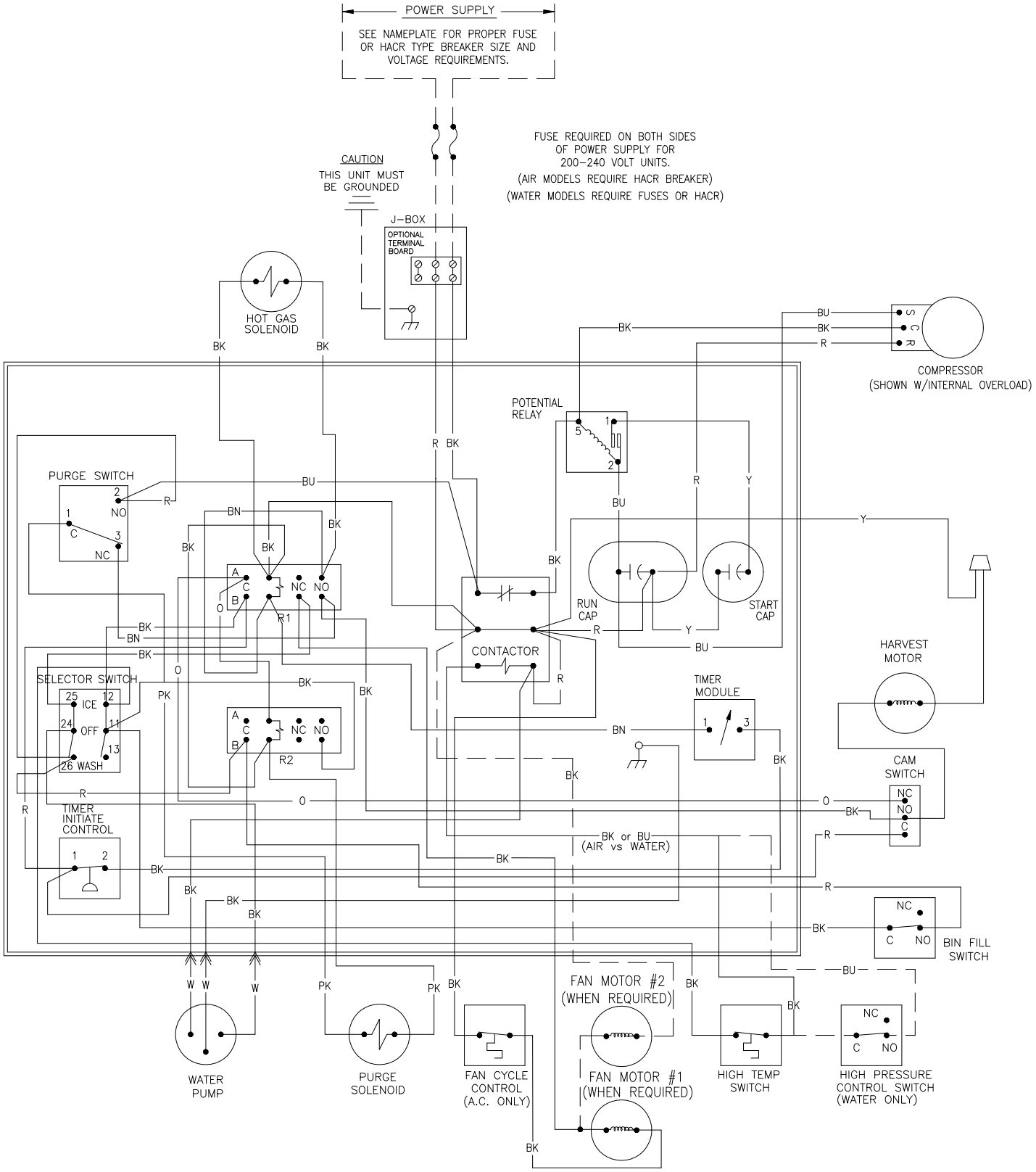

ICE1006A5-W4/ICE0806A5-W5 Wiring Schematic

WIRING SCHEMATIC
AIR & WATER
(SHOWN IN TIMED PORTION FREEZE CYCLE)

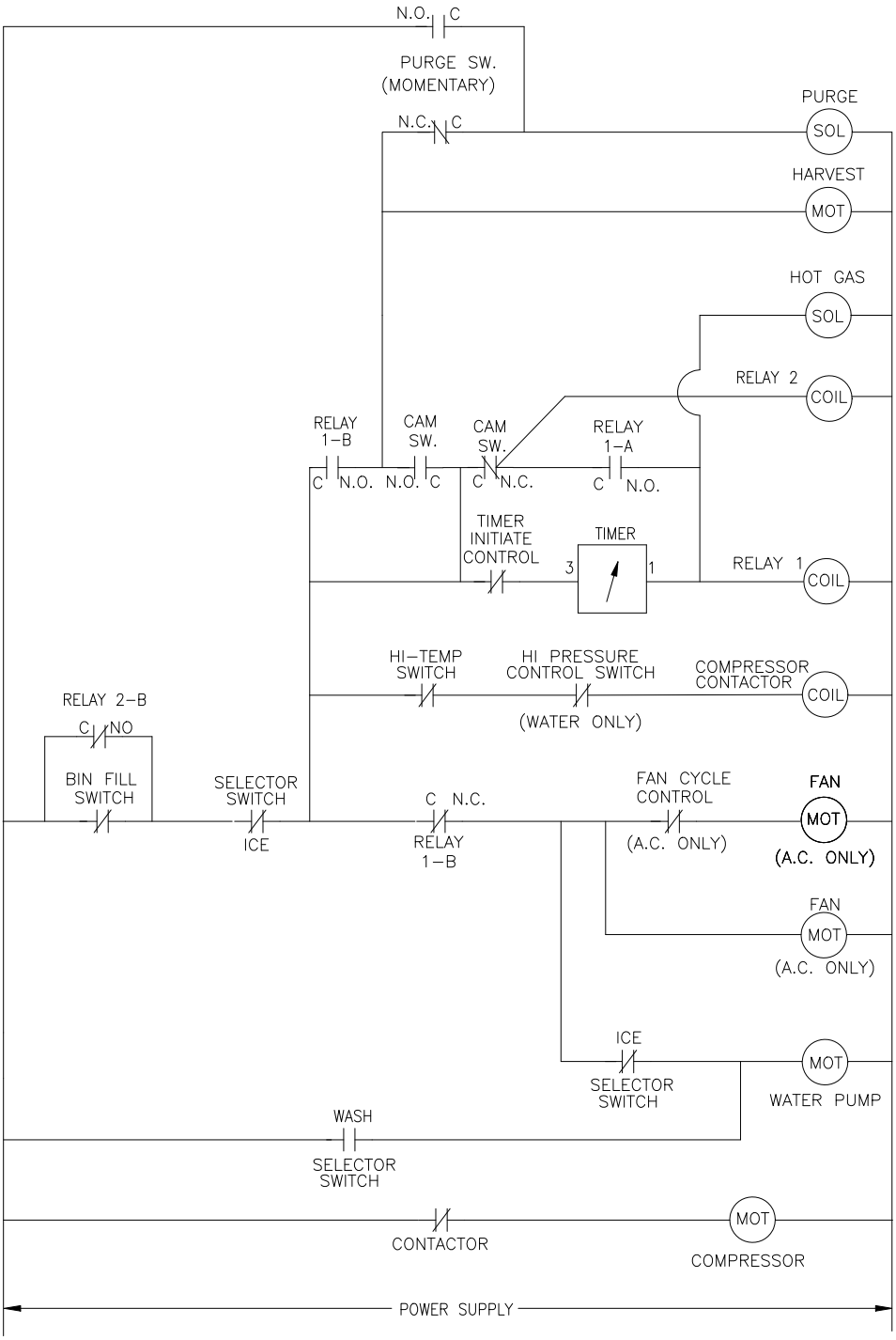

ICE726R/ICE926R Wiring Diagram

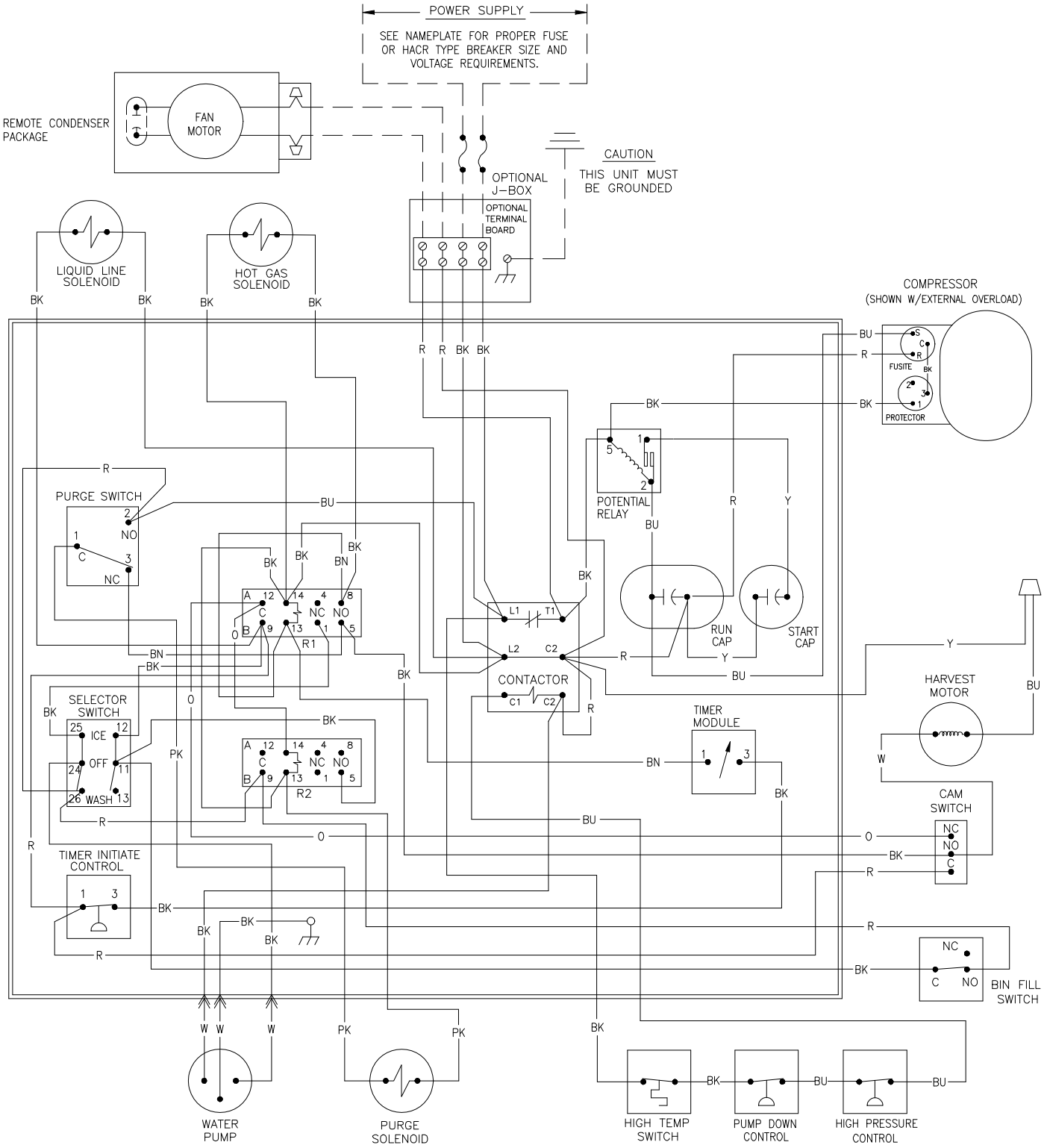

ICE726R/ICE926R Wiring Schematic

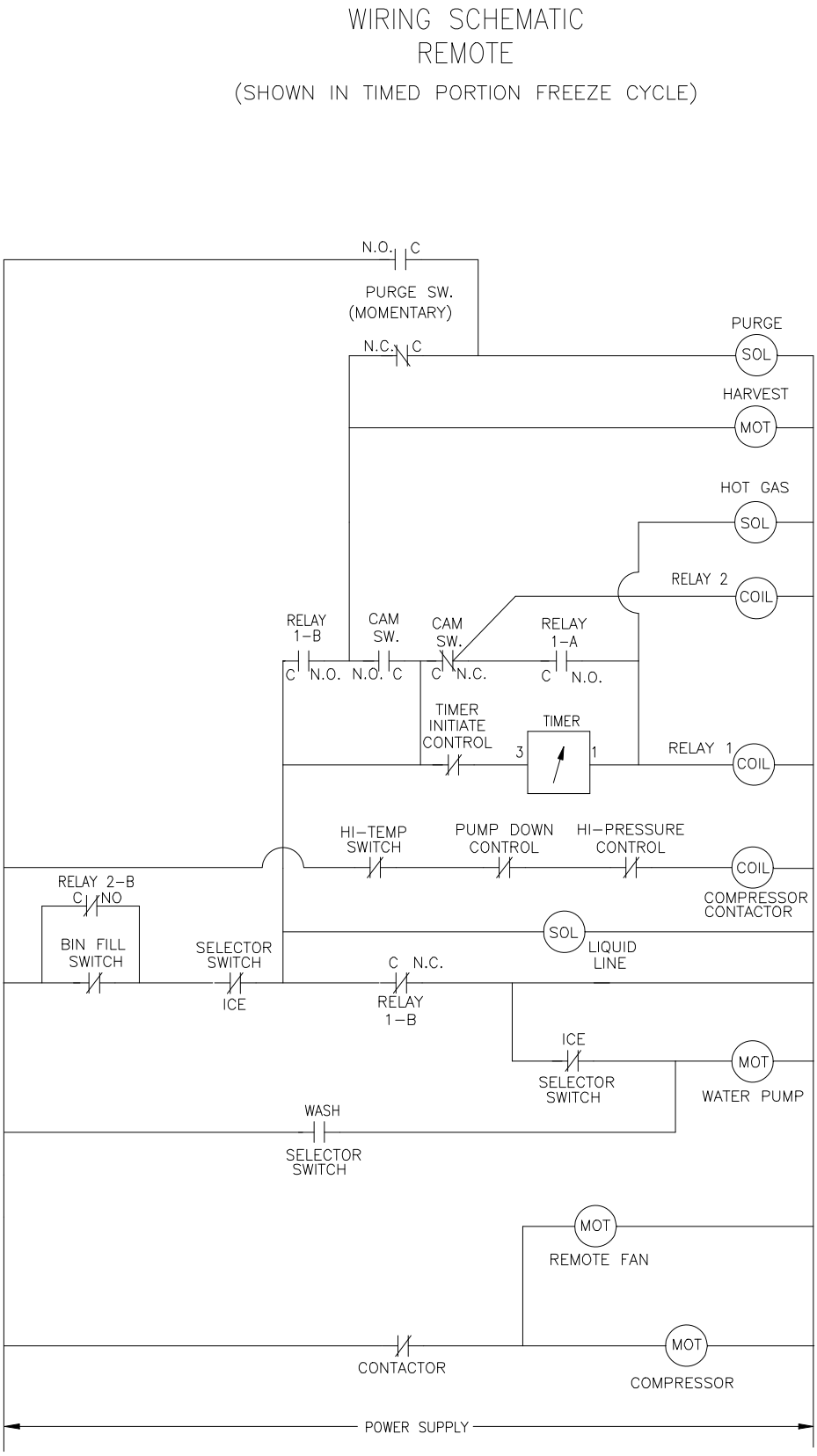

ICE855A/ICE856A ICE1006A6/ICE1006W5 Wiring Diagram

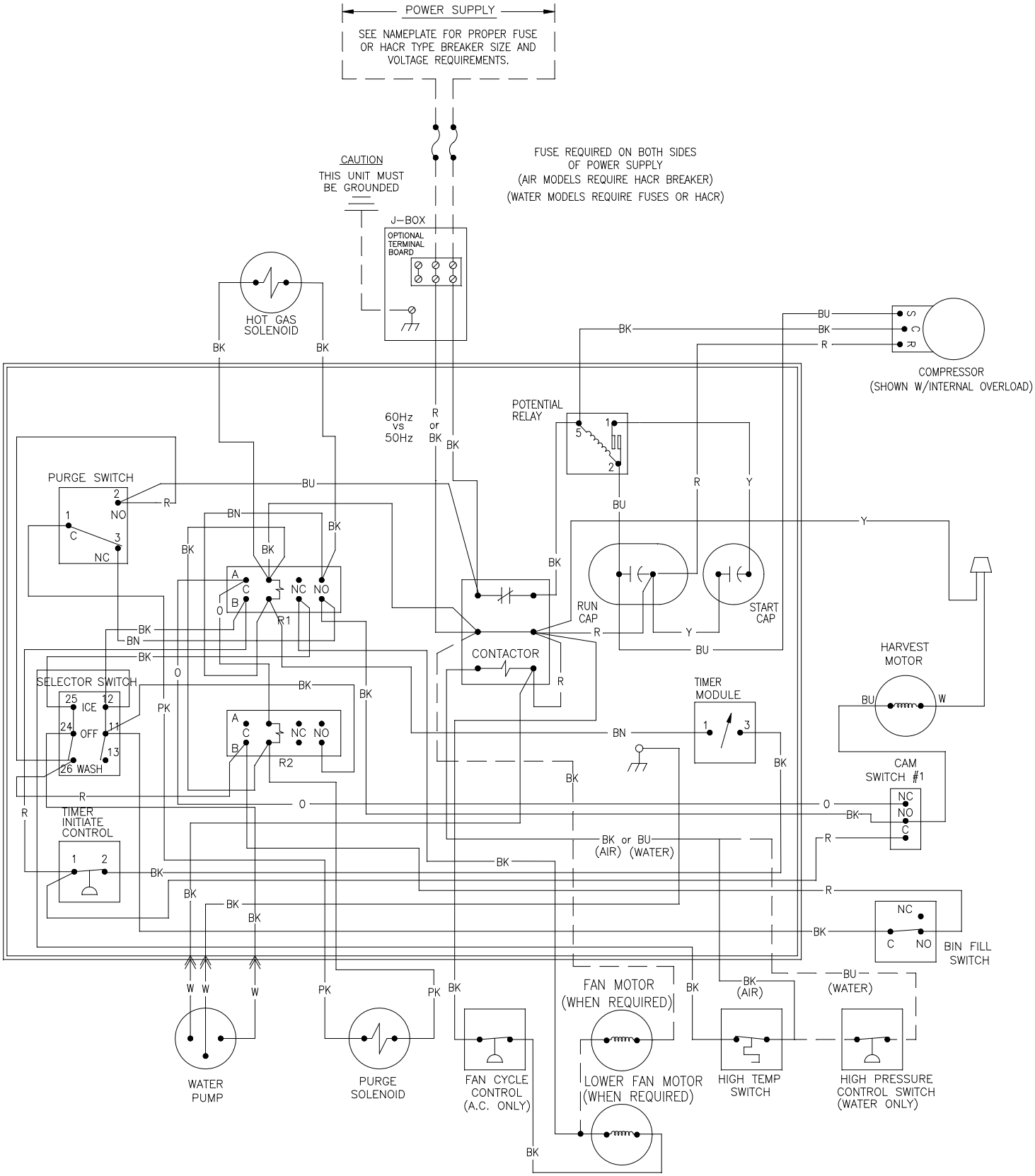

ICE855A/ICE856A ICE1006A6/ICE1006W5 Wiring Schematic

WIRING SCHEMATIC
AIR & WATER
(SHOWN IN TIMED PORTION FREEZE CYCLE)

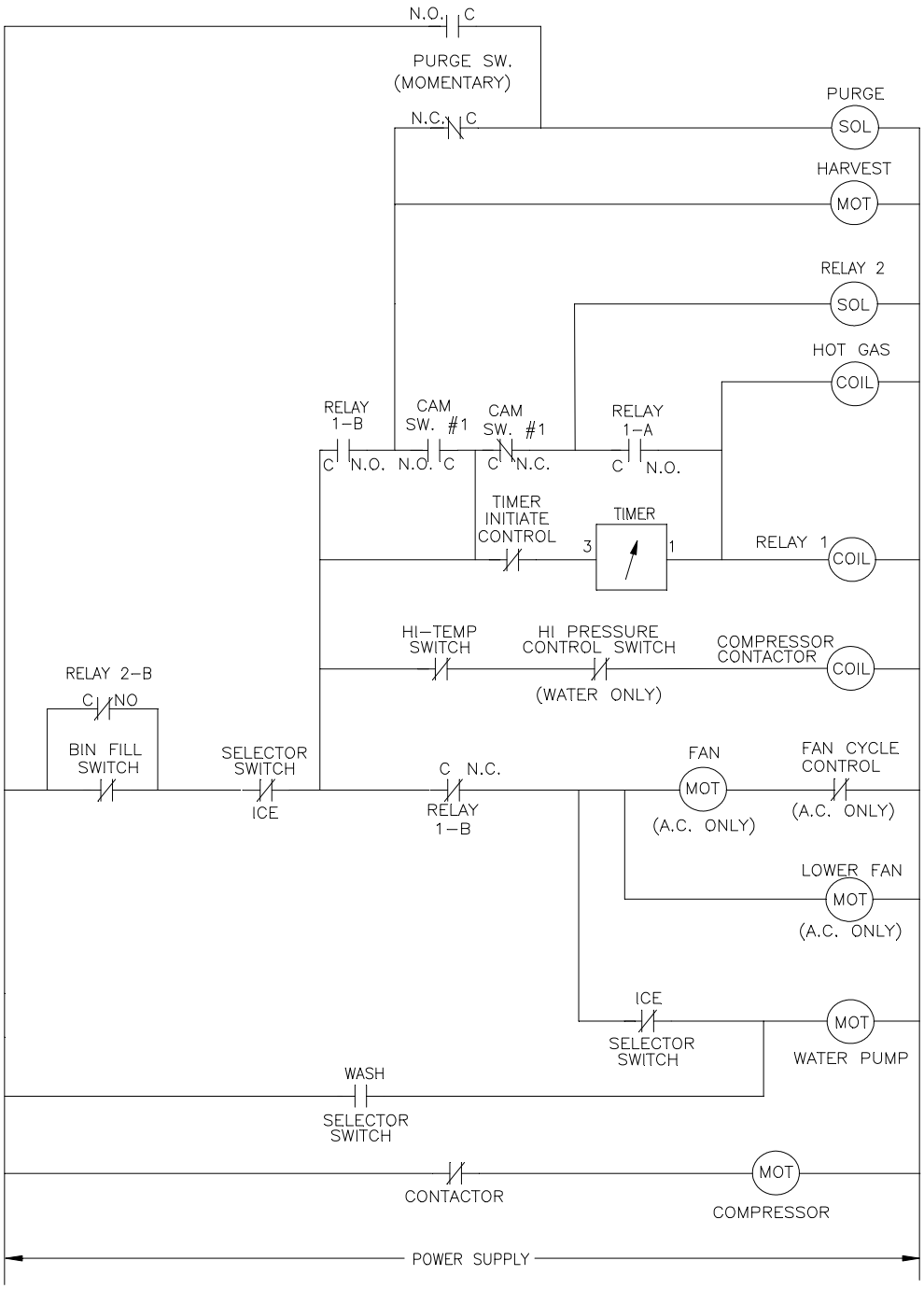

ICE1006R6 Wiring Diagram

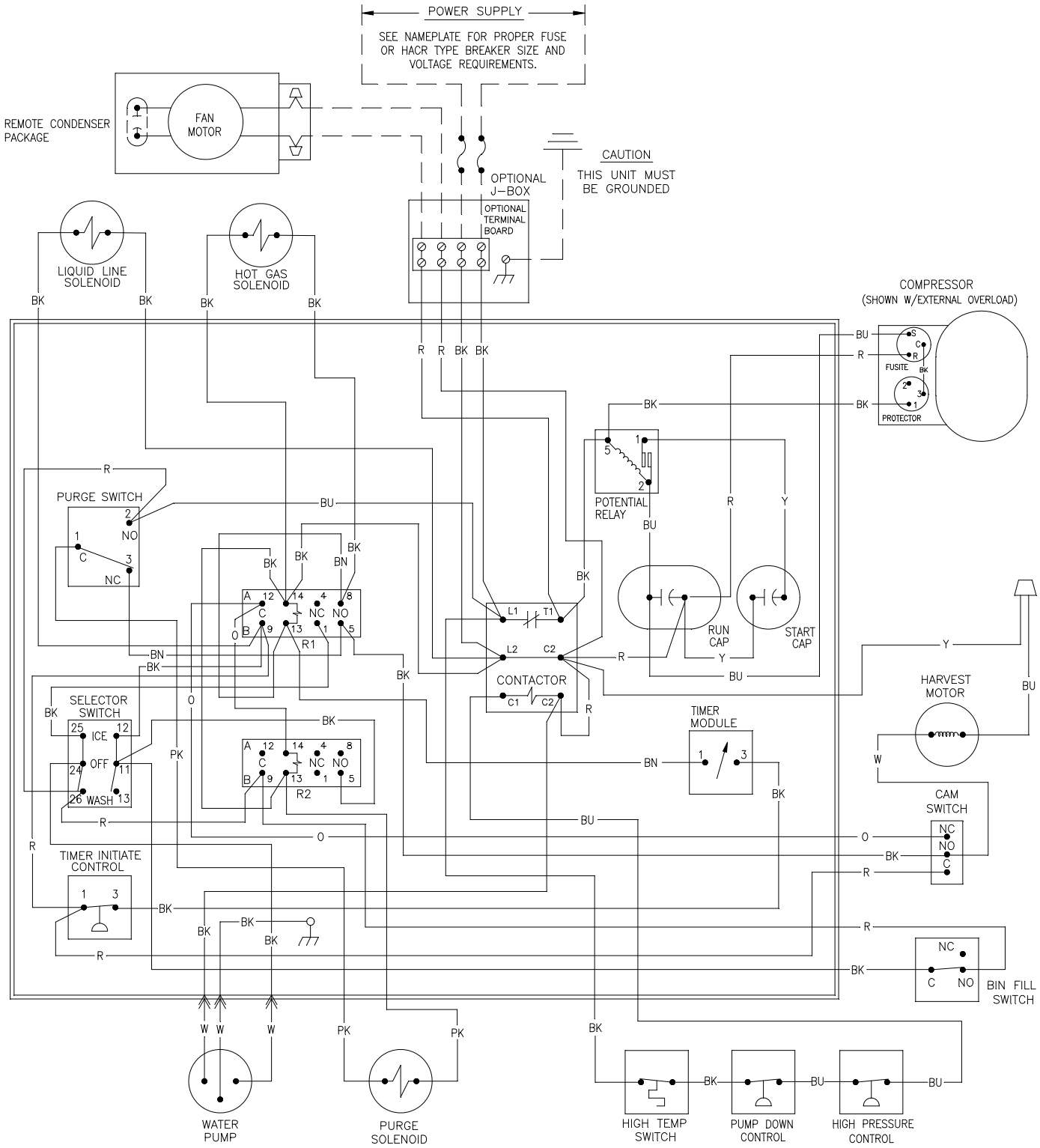

ICE1006R6 Wiring Schematic

WIRING SCHEMATIC
REMOTE
(SHOWN IN TIMED PORTION FREEZE CYCLE)

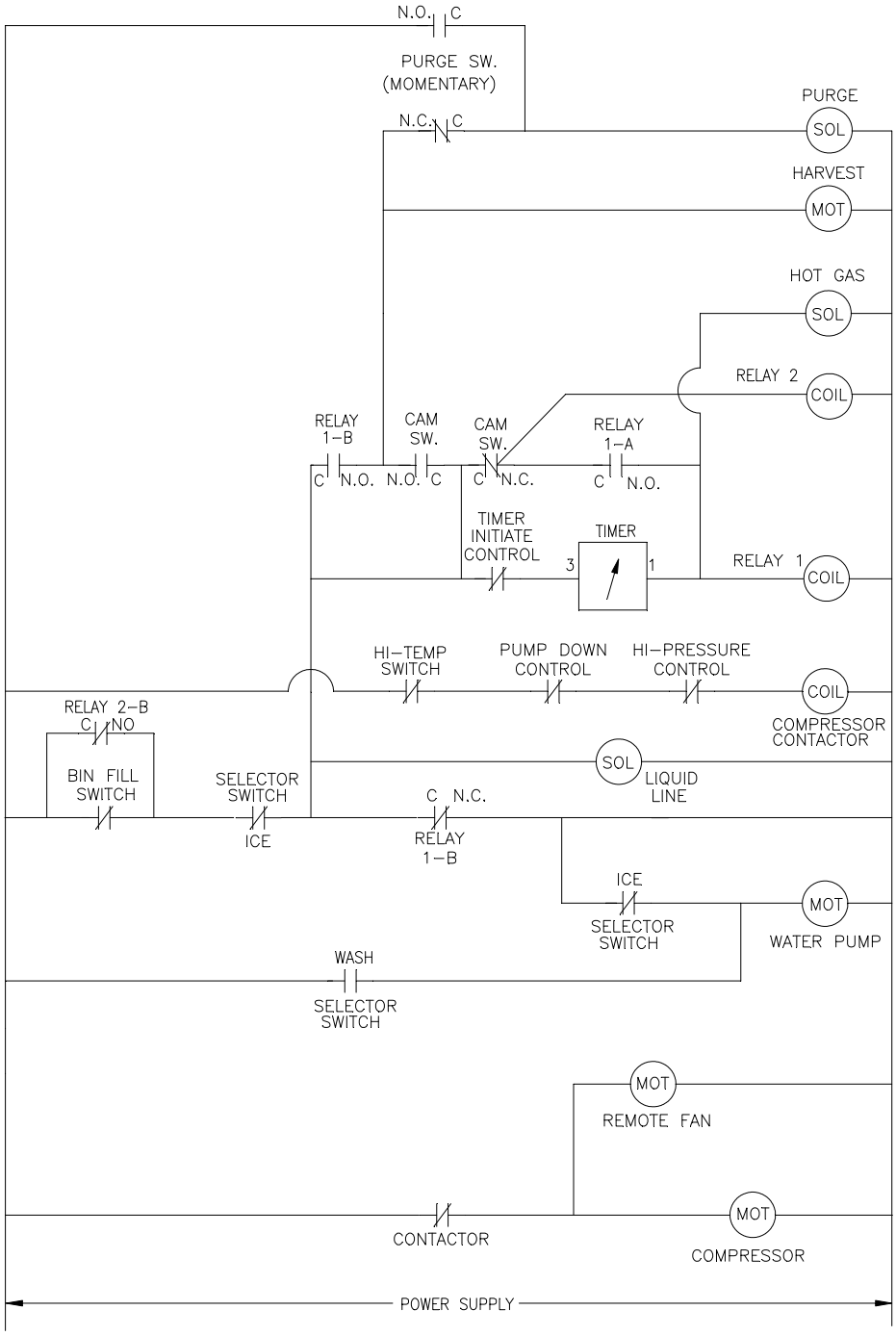

ICE1506R5 Wiring Diagram

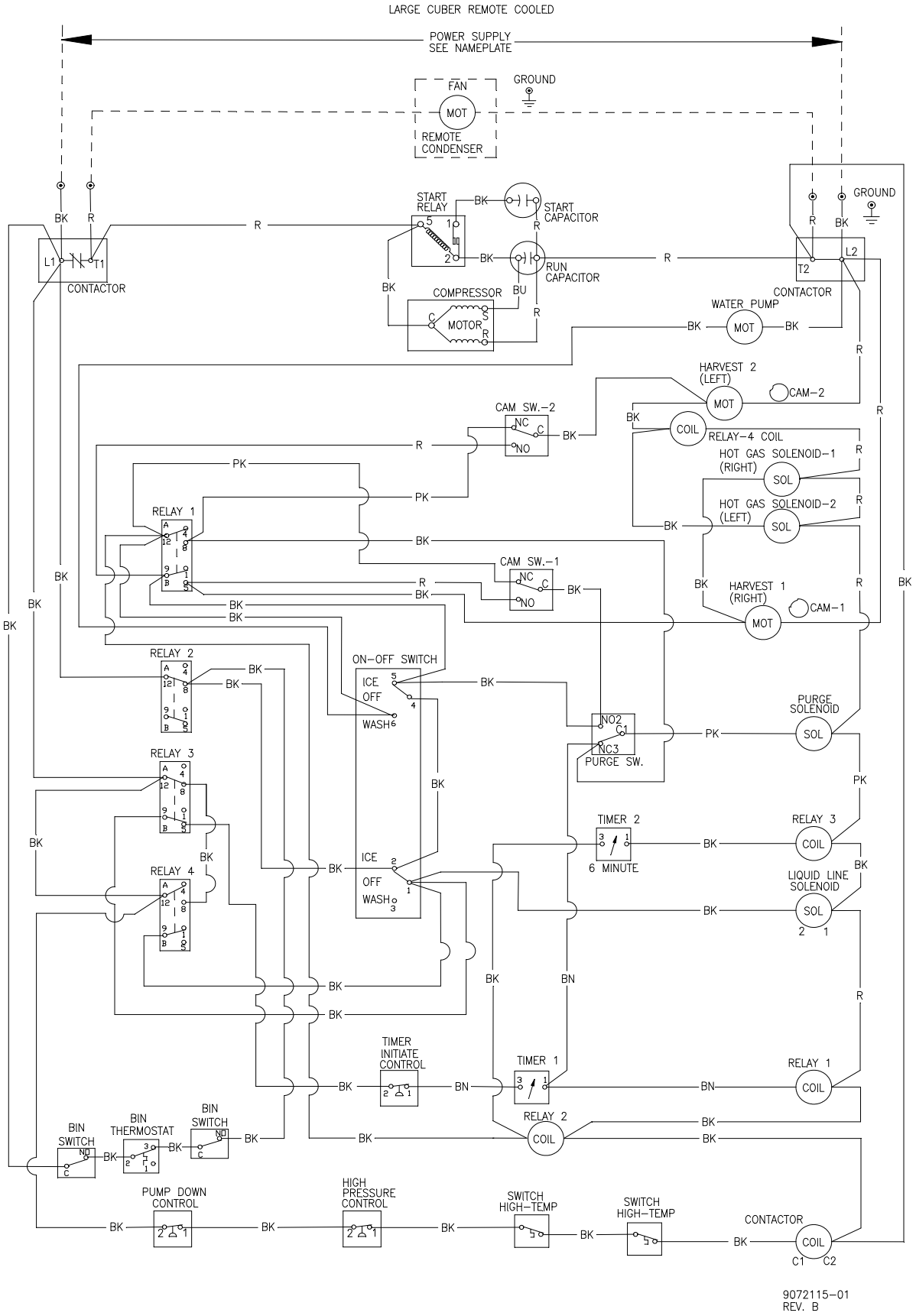

ICE1506R5 Wiring Schematic

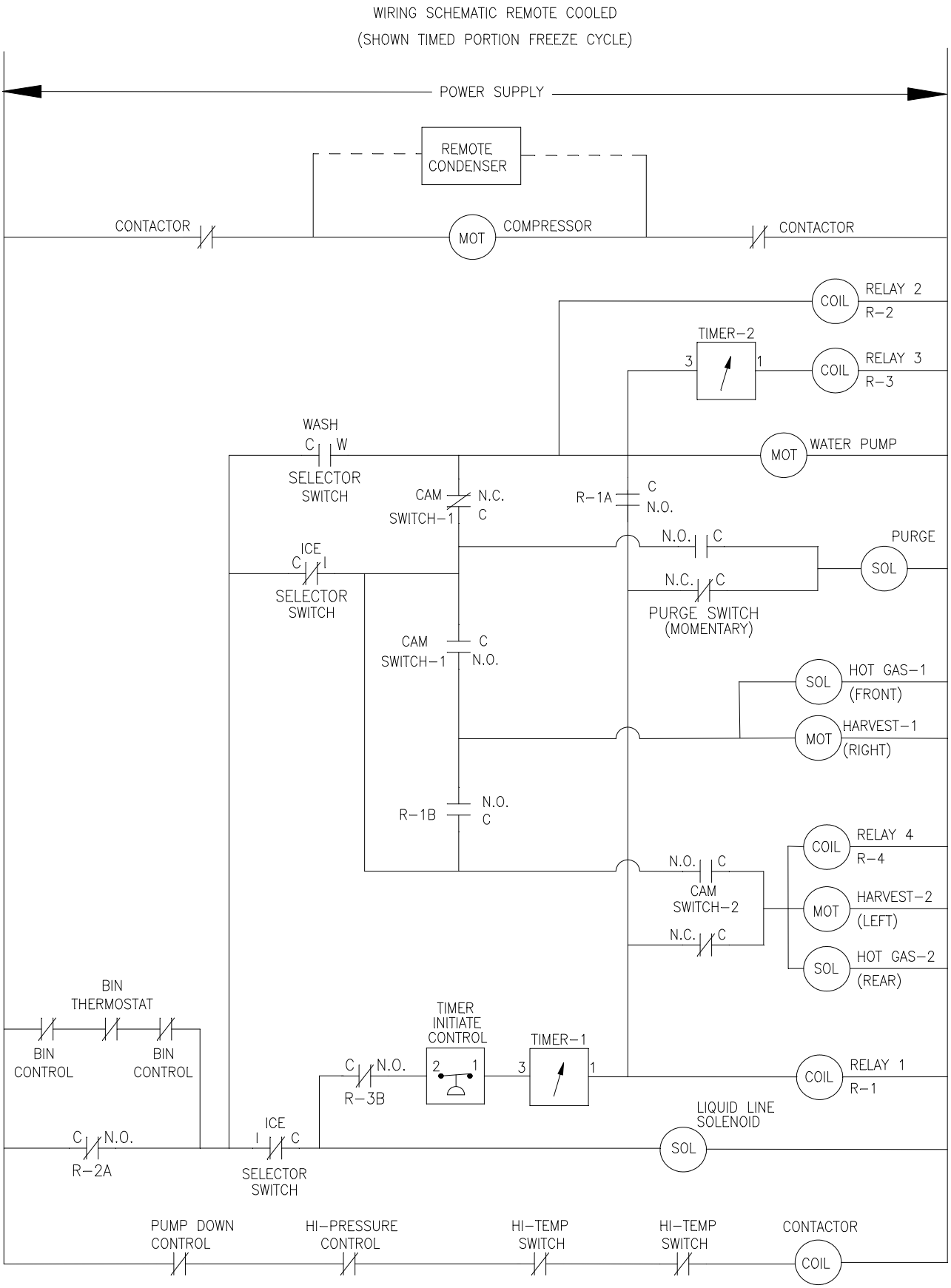

ICE1506T Wiring Diagram

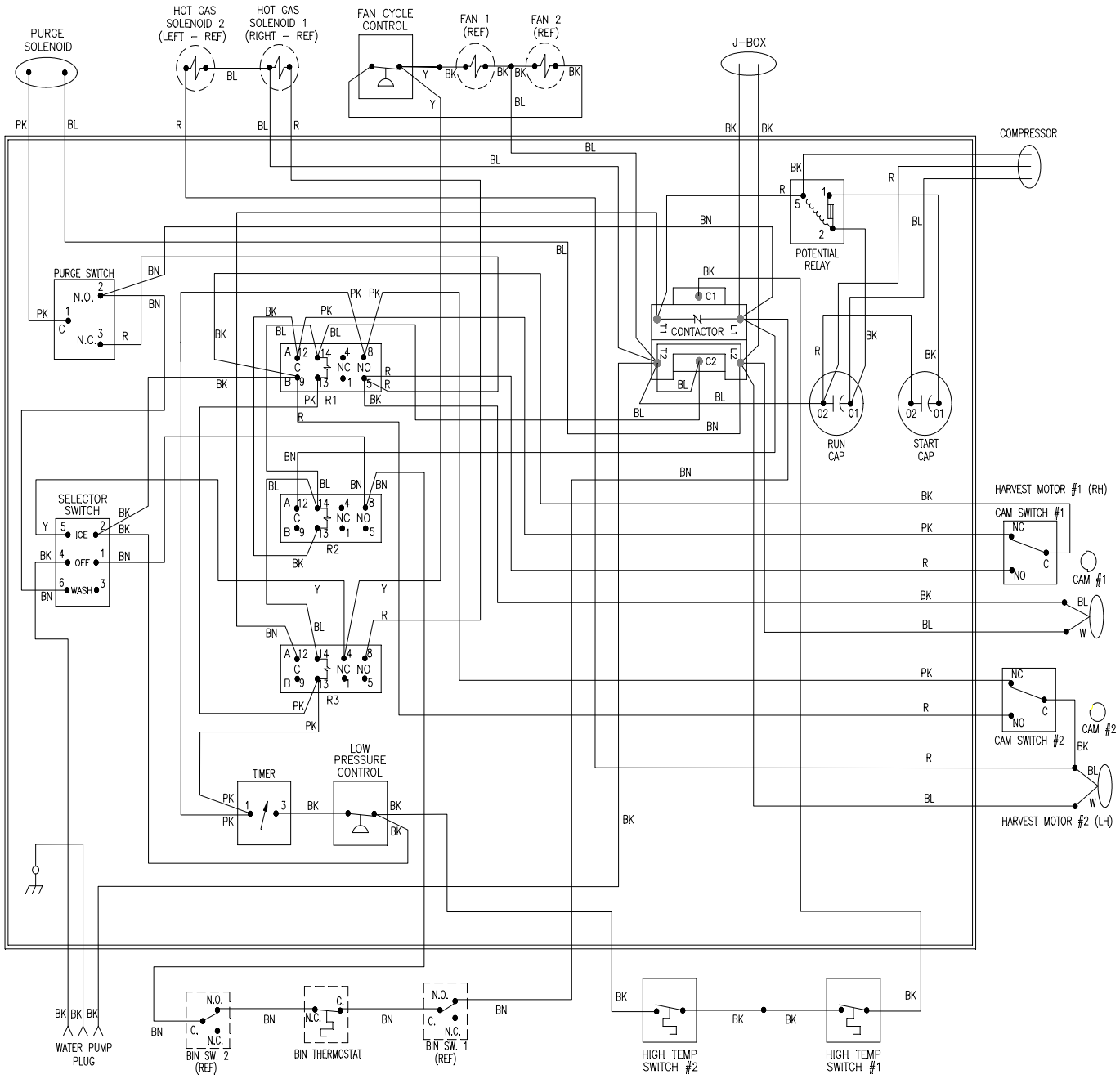

ICE1506T Wiring Schematic

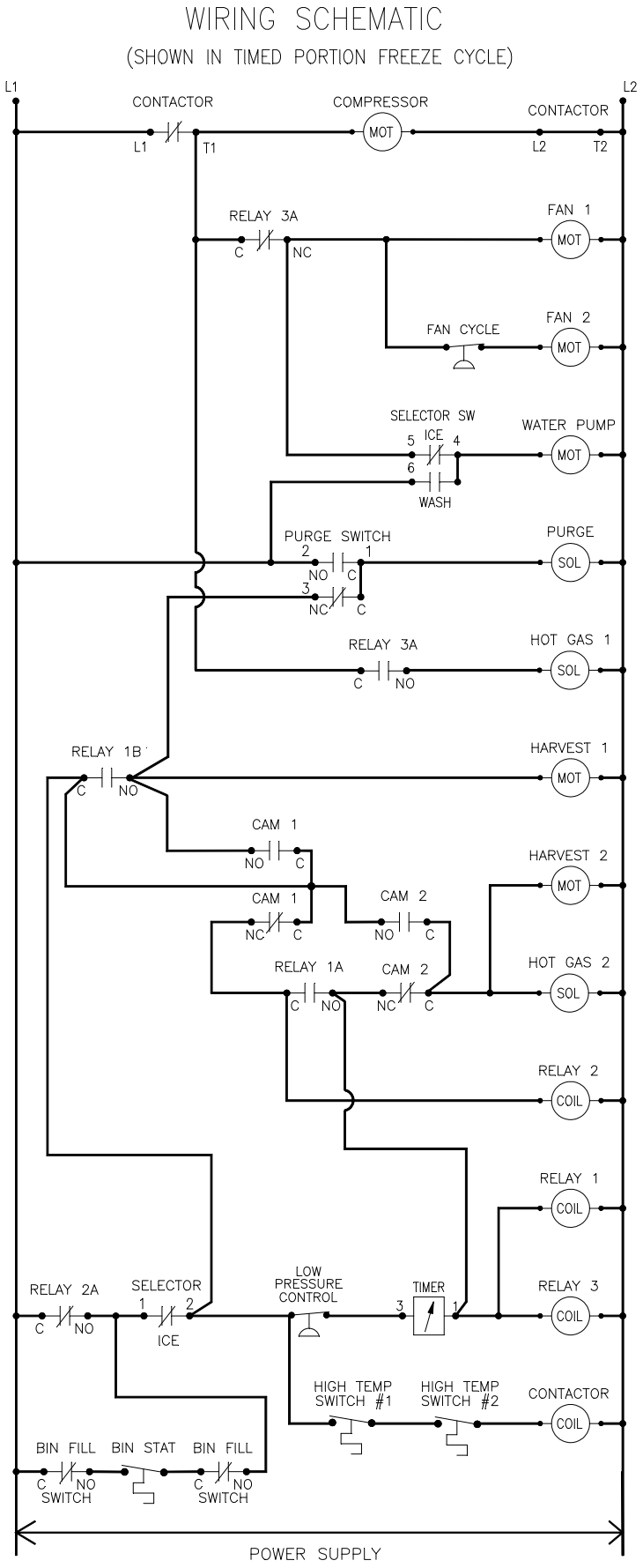

ICE1006R Dual Cam Switch Wiring Diagram

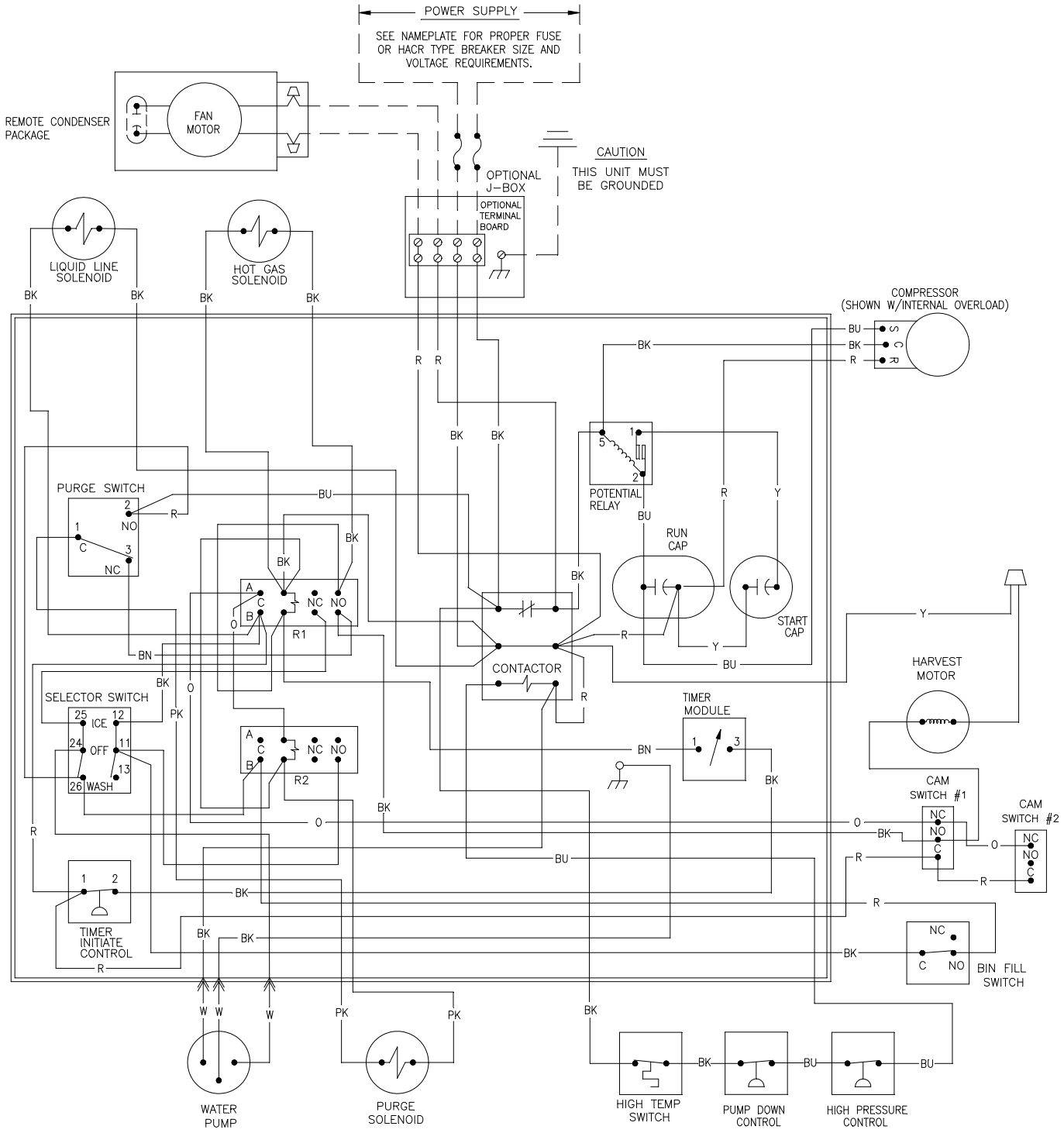

ICE1006R Dual Cam Switch Wiring Schematic

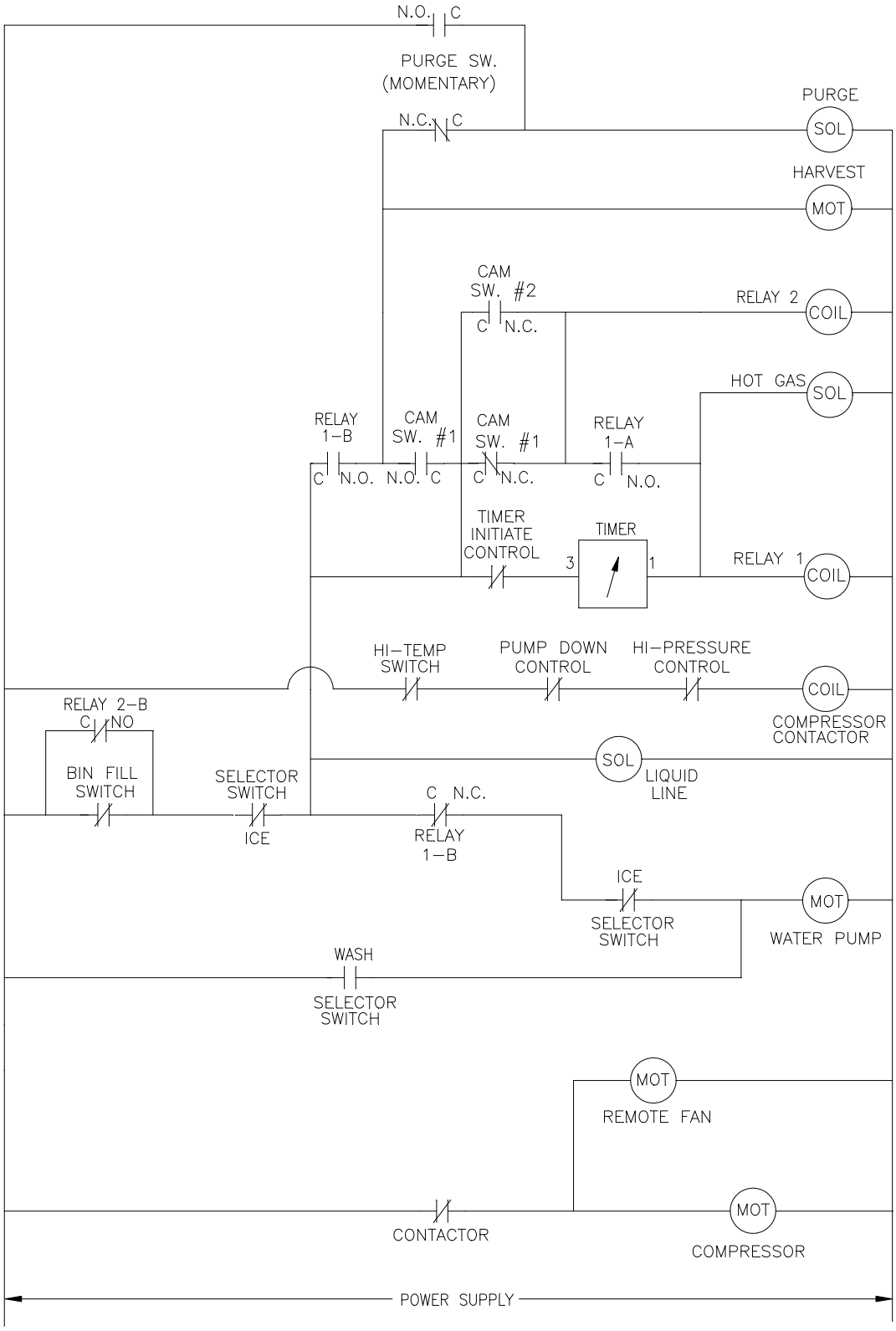

ICE0806A/W 1006A/W Dual Cam Switch Wiring Diagram

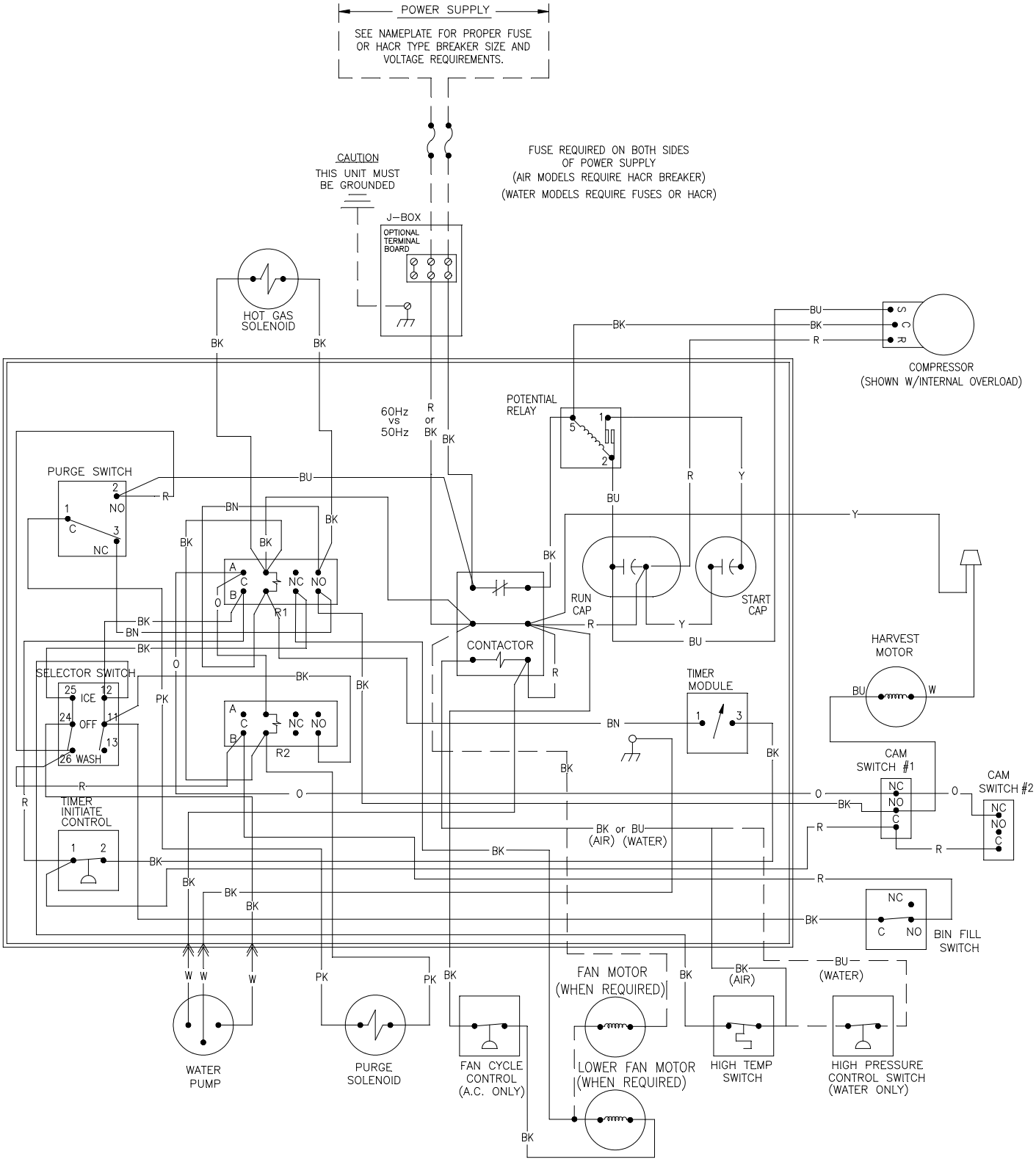

ICE0806 A/W ICE1006A/W Dual Cam Switch Wiring Schematic

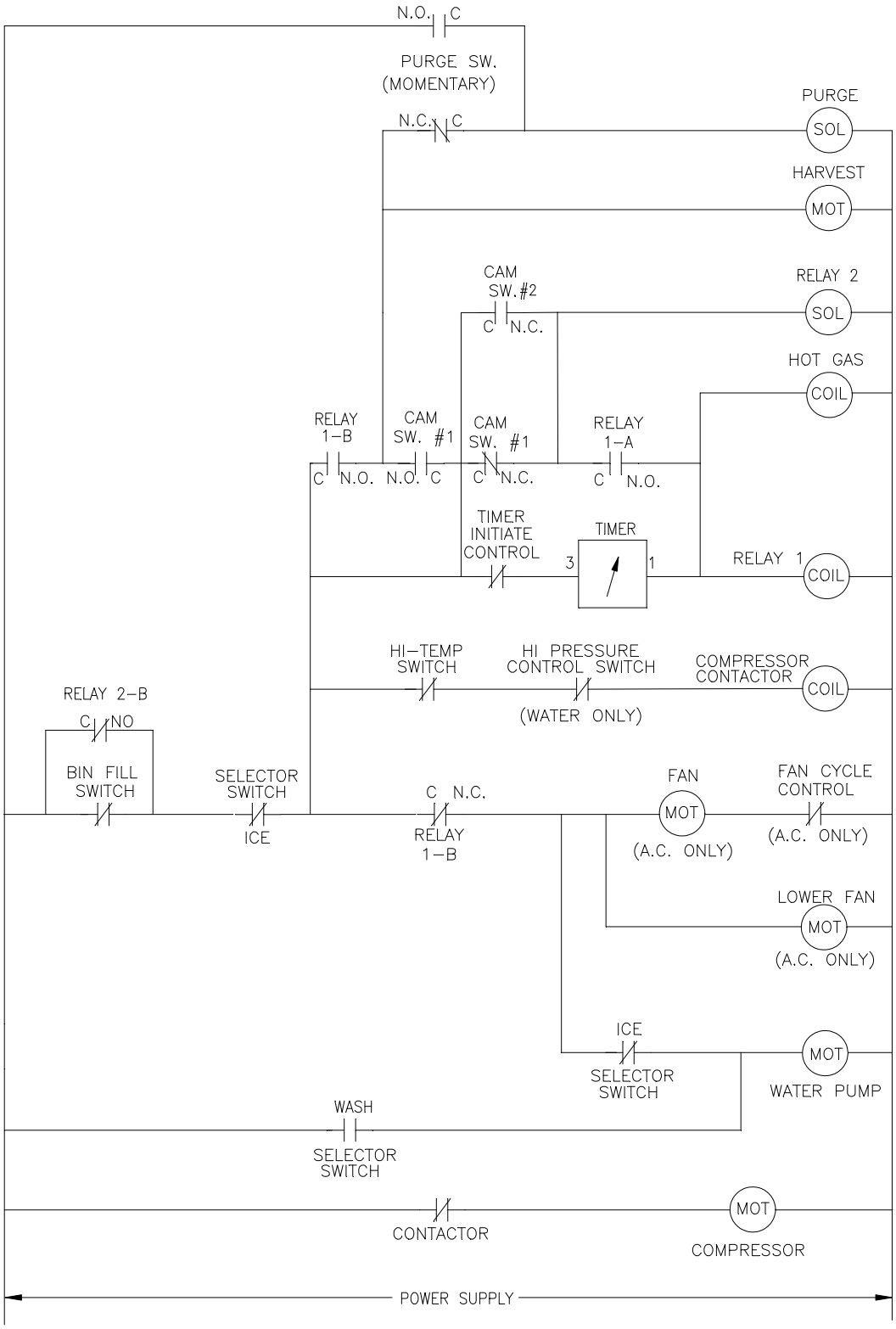

Model	Voltage Hz/Phase	24 Hour Capacity @ 90/70 Lbs.	Kg.	BTUH	Wires Including Ground	Max Fuse Size	Min. Circuit Amps	Comp. RLA	**Refrigerant Type	Oz.	Grams
ICEU150*A1	115/60/1	117	53	3148	3	15	9.6	6.8	R404A	13	369
ICEU150*W1	115/60/1	166	75	3392	3	15	7.9	5.9	R404A	10	284
ICEU150*A2	115/60/1	117	53	3148	3	15	9.6	6.8	R404A	13	369
ICEU150*W2	115/60/1	166	75	3392	3	15	7.9	5.9	R404A	10	284
ICEU150*A3	115/60/1	112	51	3572	3	15	9.7	6.9	R404A	12	340
ICEU150*W3	115/60/1	155	70	3732	3	15	7.9	5.9	R404A	9	255
ICEU150*A4	115/60/1	112	51	3572	3	15	9.7	6.9	R404A	12	340
ICEU150*W4	115/60/1	155	70	3732	3	15	7.9	5.9	R404A	9	255
ICEU150*A5	115/60/1	130	59	3572	3	15	9.7	6.8	R404A	12	340
ICEU150*W5	115/60/1	140	64	3569	3	15	7.9	5.9	R404A	9	255
ICEU200*A1	115/60/1	157	71	4435	3	15	11.6	8.2	R404A	13	369
ICEU200*W1	115/60/1	183	83	4199	3	15	8.9	6.7	R404A	9	255
ICEU200*A2	115/60/1	157	71	4435	3	15	11.6	8.2	R404A	13	369
ICEU200*W2	115/60/1	183	83	4199	3	15	8.9	6.7	R404A	9	255
ICEU220*A1	115/60/1	175	80	4609	3	15	11.9	8.5	R404A	12	340
ICEU220*W1	115/60/1	220	100	4642	3	15	8.9	6.7	R404A	9	255
ICEU220*A2	115/60/1	175	80	4609	3	15	11.9	8.5	R404A	12	340
ICEU220*W2	115/60/1	220	100	4642	3	15	8.9	6.7	R404A	9	255
ICEU220*A3	115/60/1	175	79	4609	3	15	11.9	8.5	R404A	12	340
ICEU220*W3	115/60/1	193	88	4288	3	15	8.9	6.7	R404A	9	255
ICEU206*A1	230/60/1	162	74	4115	3	15	4.8	3.2	R-134a	14	397
ICEU206*W1	230/60/1	190	86	4009	3	15	4.0	2.9	R-134a	11	312
ICEU226*A1	230/60/1	168	76	4321	3	15	6.0	4.2	R404A	12	340
ICEU226*W1	230/60/1	192	87	4263	3	15	4.4	3.2	R404A	9	255
ICEU226*A2	230/60/1	168	76	4321	3	15	6.0	4.2	R404A	12	340
ICEU226*W2	230/60/1	192	87	4263	3	15	4.4	3.2	R404A	9	255
ICEU226*A3	230/60/1	168	76	4321	3	15	6.0	4.2	R404A	12	340
ICEU226*W3	230/60/1	192	87	4263	3	15	4.4	3.2	R404A	9	255
ICEU300A1	115/60/1	228	104	5928	3	15	13.1	8.8	R404A	16	454
ICEU300W1	115/60/1	296	135	6097	3	15	11.1	8.5	R404A	13	369
ICEU300A2	115/60/1	228	103	5928	3	15	13.1	8.8	R404A	16	454
ICEU300W2	115/60/1	296	135	6097	3	15	11.1	8.5	R404A	13	369
ICEU300A3	115/60/1	228	103	5928	3	15	13.1	8.8	R404A	16	454
ICEU300W3	115/60/1	296	135	6097	3	15	11.1	8.5	R404A	13	369
ICE0250*A2	115/60/1	244	111	6221	3	15	13.3	8.6	R404A	16	454
ICE0250*A-T2	115/60/1	244	111	6221	3	15	13.3	8.6	R404A	16	454
ICE0250*W2	115/60/1	284	129	6030	3	15	10.8	8.2	R404A	13	369
ICE0250*A3	115/60/1	244	111	6221	3	15	13.3	8.6	R404A	16	454
ICE0250*A-T3	115/60/1	244	111	6221	3	15	13.3	8.6	R404A	16	454
ICE0250*W3	115/60/1	284	129	6030	3	15	10.8	8.2	R404A	13	369
ICE0250*A4	115/60/1	253	115	6248	3	15	13.3	8.6	R404A	25	709
ICE0250*A-T4	115/60/1	244	111	6248	3	15	13.3	8.6	R404A	25	709
ICE0250*W4	115/60/1	275	125	5855	3	15	10.8	8.2	R404A	13	369
ICE0250*A5	115/60/1	253	115	6248	3	15	13.3	8.6	R404A	25	709
ICE0250*A6	115/60/1	263	115	6248	3	15	13.3	8.6	R404A	25	709
ICE0250*T5	115/60/1	244	111	6248	3	15	13.3	8.6	R404A	25	709
ICE0250*W5	115/60/1	275	125	5855	3	15	10.8	8.2	R404A	13	369
ICE0250*T6	115/60/1	244	111	5855	3	15	13.3	8.6	R404A	25	709
ICE0320*A1	115/60/1	214	97	5910	3	15	13.8	9.0	R404A	18	510
ICE0320*W1	115/60/1	312	142	6195	3	15	10.9	8.3	R404A	15	425
ICE0320*A2	115/60/1	214	97	5910	3	15	13.8	9.0	R404A	18	510
ICE0320*W2	115/60/1	312	142	6195	3	15	13.1	10.1	R404A	11	312
ICE0320*A**3**	115/60/1	214	97	5910	3	15	13.2	9.0	R404A	18	510
ICE0320*W**3**	115/60/1	312	142	6195	3	15	13.1	10.1	R404A	11	312
ICE0320*A4	115/60/1	249	113	6228	3	15	13.2	9.0	R404A	18	510
ICE0320*A5	115/60/1	249	113	6228	3	15	13.2	9.0	R404A	18	510

Model	Voltage Hz/Phase	24 Hour Capacity @ 90/70 Lbs.	Kg.	BTUH	Wires Including Ground	Max Fuse Size	Min. Circuit Amps	Comp. RLA	**Refrigerant Type	Oz.	Grams
ICE0320*W4	115/60/1	308	140	6115	3	15	13.1	10.1	R404A	11	312
ICE0320*W5	115/60/1	308	140	6115	3	15	13.1	10.1	R404A	11	312
ICE0400*A1	115/60/1	366	166	8064	3	15	14.4	9.5	R404A	32	907
ICE0400*A-T1	115/60/1	368	167	8101	3	15	14.1	9.3	R404A	32	907
ICE0400*W1	115/60/1	449	204	8388	3	15	13.4	10.3	R404A	14	397
ICE0400*A2	115/60/1	366	166	8064	3	15	14.4	9.5	R404A	29	822
ICE0400*A-T2	115/60/1	368	167	8101	3	15	14.1	9.3	R404A	29	822
ICE0400*W2	115/60/1	449	204	8388	3	15	13.4	10.3	R404A	14	397
ICE0400*A3	115/60/1	368	167	7835	3	20	17.1	11.7	R404A	30	850
ICE0400*A-T3	115/60/1	357	162	7757	3	20	17.1	11.7	R404A	30	850
ICE0400*W3	115/60/1	407	185	7563	3	15	12.9	9.9	R404A	14	397
ICE0400*A4	115/60/1	368	167	7835	3	20	17.1	11.7	R404A	30	850
ICE0400*A-T4	115/60/1	357	162	7757	3	20	17.1	11.7	R404A	30	850
ICE0400*W4	115/60/1	407	185	7563	3	15	12.9	9.9	R404A	14	397
ICE0400*A5	115/60/1	368	167	7835	3	20	17.1	11.7	R404A	30	850
ICE0400*T5	115/60/1	357	162	7757	3	20	17.1	11.7	R404A	30	850
ICE0400*T6	115/60/1	357	162	7757	3	20	17.1	11.7	R404A	30	850
ICE0406*A1	208-230/60/1	323	147	7712	3	15	8.8	5.9	R404A	32	907
ICE0406*W1	208-230/60/1	381	173	7664	3	15	7.5	5.7	R404A	16	454
ICE0406*A2	208-230/60/1	323	147	7712	3	15	8.8	5.9	R404A	32	907
ICE0406*W2	208-230/60/1	381	173	7664	3	15	7.5	5.7	R404A	16	454
ICE0406*A3	208-230/60/1	385	175	7832	3	15	8.0	5.3	R404A	30	850
ICE0406*W3	208-230/60/1	439	200	7770	3	15	6.4	4.8	R404A	14	397
ICE0406*A4	208-230/60/1	358	162	7523	3	15	8.0	5.3	R404A	30	850
ICE0406*A5	208-230/60/1	358	162	7523	3	15	8.0	5.3	R404A	30	850
ICE0406*W4	208-230/60/1	439	200	7770	3	15	6.4	4.8	R404A	14	397
ICE0500*A1	115/60/1	461	210	10843	3	20	24.8	18.5	R404A	37	1049
ICE0500*A-T1	115/60/1	455	207	10736	3	20	24.8	18.5	R404A	37	1049
ICE0500*W1	115/60/1	499	227	10242	3	20	13.6	10.5	R404A	15	425
ICE0500*R1	115/60/1	407	199	10881	3	20	18.7	12.3	R404A	160	4536
ICE0500*A2	115/60/1	461	210	10843	3	20	19.9	13.9	R404A	22	624
ICE0500*A-T2	115/60/1	455	207	10736	3	20	19.9	13.9	R404A	22	624
ICE0500*W2	115/60/1	499	227	10242	3	20	13.6	10.5	R404A	15	425
ICE0500*R2	115/60/1	407	199	10881	3	20	18.7	12.3	R404A	160	4536
ICE0500*A3	115/60/1	458	208	9990	3	20	19.1	13.3	R404A	25	709
ICE0500*A-T3	115/60/1	470	214	9982	3	20	19.1	13.3	R404A	25	709
ICE0500*W3	115/60/1	513	233	9777	3	20	14.3	11.0	R404A	15	425
ICE0500*R3	115/60/1	446	203	11357	3	20	18.7	12.3	R404A	132	3742
ICE0500*R4	115/60/1	455	207	10278	3	20	14.9	9.3	R404A	132	3742
ICE0500*A4	115/60/1	458	208	9990	3	20	19.1	13.3	R404A	25	709
ICE0500*A-T4	115/60/1	470	214	9982	3	20	19.1	13.3	R404A	25	709
ICE0500*A-T5	115/60/1	470	214	9982	3	20	19.1	13.3	R404A	25	709
ICE0500*A5	115/60/1	448	203	9835	3	20	19.0	13.3	R404A	25	709
ICE0500*T6	115/60/1	448	203	9790	3	20	19.0	13.3	R404A	25	709
ICE0500*W4	115/60/1	513	233	9777	3	20	14.3	11.0	R404A	15	425
ICE0500*R5	115/60/1	455	207	10278	3	20	14.9	9.3	R404A	132	3742
ICE0520*A1	115/60/1	353	160	8441	3	20	18.3	12.3	R404A	32	907
ICE0520*W1	115/60/1	442	201	8356	3	15	13.5	10.4	R404A	14	397
ICE0520*A2	115/60/1	353	160	8441	3	20	15.4	10.6	R404A	20	567
ICE0520*W2	115/60/1	442	201	8356	3	15	13.5	10.4	R404A	14	397
ICE0520*A3	115/60/1	370	168	7753	3	20	16.0	11.1	R404A	21	595
ICE0520*W3	115/60/1	442	201	7852	3	15	11.8	9.0	R404A	12	340
ICE0520*A4	115/60/1	370	168	7753	3	20	16.0	11.1	R404A	21	595
ICE0520*A5	115/60/1	370	168	7753	3	20	16.0	11.1	R404A	21	595
ICE0520*A6	115/60/1	370	168	7753	3	20	16.0	11.1	R404A	21	595

Model	Voltage Hz/Phase	24 Hour Capacity @ 90/70 Lbs.	Kg.	BTUH	Wires Including Ground	Max Fuse Size	Min. Circuit Amps	Comp. RLA	**Refrigerant Type	Oz.	Grams
ICE0520*W4	115/60/1	442	201	7852	3	15	11.8	9.0	R404A	12	340
ICE0520*W5	115/60/1	442	201	7852	3	15	11.8	9.0	R404A	12	340
ICE0606*A1	208-230/60/1	525	239	11538	3	15	12.4	8.8	R404A	36	1021
ICE0606*A-T1	208-230/60/1	510	232	11293	3	15	13.3	9.5	R404A	36	1021
ICE0606*W1	208-230/60/1	590	268	11473	3	15	9.5	7.3	R404A	18	510
ICE0606*R1	208-230/60/1	544	247	12269	3	15	13.0	8.7	R404A	160	4536
ICE0606*A2	208-230/60/1	525	239	11538	3	15	12.0	8.5	R404A	24	1021
ICE0606*A-T2	208-230/60/1	510	232	11293	3	15	11.7	8.2	R404A	24	1021
ICE0606*W2	208-230/60/1	590	268	11473	3	15	9.5	7.3	R404A	18	510
ICE0606*R2	208-230/60/1	544	247	12269	3	15	13.0	8.7	R404A	160	4536
ICE0606*R3	208-230/60/1	543	247	12132	3	15	13.0	8.7	R404A	132	3742
ICE0606*A3	208-230/60/1	506	230	10566	3	15	11.5	7.9	R404A	24	680
ICE0606*A-T3	208-230/60/1	505	230	10566	3	15	10.4	7.0	R404A	26	737
ICE0606*W3	208-230/60/1	502	228	10767	3	15	8.7	6.6	R404A	17	482
ICE0606*R4	208-230/60/1	576	262	10850	3	15	12.9	8.6	R404A	132	3742
ICE0606*A4	208-230/60/1	506	230	10566	3	15	11.5	7.9	R404A	24	680
ICE0606*A-T4	208-230/60/1	505	230	10566	3	15	10.4	7.0	R404A	26	737
ICE0606*W4	208-230/60/1	502	228	10767	3	15	8.7	6.6	R404A	17	482
ICE0606*R5	208-230/60/1	576	262	10850	3	15	12.9	8.6	R404A	132	3742
ICE0606*W5	208-230/60/1	550	249	10767	3	15	10.0	6.6	R404A	17	482
ICE0606*A5	208-230/60/1	530	240	10556	3	15	10.7	7.9	R404A	24	680
ICE0606*T6	208-230/60/1	530	240	10884	3	15	10.7	7	R404A	26	737
ICE0606*R6	208-230/60/1	550	249	10767	3	15	11.1	8.6	R404A	132	3742
ICE0726R	208-230/60/1	700	318	15250	3	20	14.0	9.8	R404A	176	4990
ICE0806*A1	208-230/60/1	698	317	15003	3	20	13.0	9.2	R404A	41	1163
ICE0806*W1	208-230/60/1	840	382	14458	3	20	9.8	7.4	R404A	29	823
ICE0806*R1	208-230/60/1	762	346	15168	3	20	12.3	8.1	R404A	240	6804
ICE0806*A2	208-230/60/1	698	317	15003	3	20	13.0	9.2	R404A	27	765
ICE0806*W2	208-230/60/1	840	382	14458	3	20	9.8	7.4	R404A	24	680
ICE0806*R2	208-230/60/1	762	346	15168	3	20	12.3	8.1	R404A	240	6804
ICE0806*A2	208-230/60/1	698	317	15003	3	20	13.0	9.2	R404A	27	765
ICE0806*W2	208-230/60/1	840	382	14458	3	20	9.8	7.4	R404A	24	680
ICE0806*R3	208-230/60/1	826	375	16371	3	20	12.3	8.1	R404A	176	4990
ICE0806*A3	208-230/60/1	698	317	13806	3	20	13.2	9.2	R404A	31	879
ICE0806*W3	208-230/60/1	840	382	14355	3	20	9.8	7.4	R404A	28	794
ICE0806*R4	208-230/60/1	826	375	15205	3	20	14.7	8.1	R404A	176	4990
ICE0806*A4	208-230/60/1	698	317	13806	3	20	13.2	9.2	R404A	31	879
ICE0806*W4	208-230/60/1	840	382	14355	3	20	9.8	7.4	R404A	28	794
ICE0806*A5	208-230/60/1	650	295	13806	3	20	13.2	7.2	R404A	31	879
ICE0806*W5	208-230/60/1	784	356	14355	3	20	9.8	7.4	R404A	28	794
ICE0806*R5	208-230/60/1	768	348	15205	3	20	14.7	10.8	R404A	176	4990
ICE0926R	208-230/60/1	780	354	17200	3	20	16.2	11.6	R404A	176	4990
ICE1006*A1	208-230/60/1	811	369	16239	3	20	13.8	9.0	R404A	50	1418
ICE1006*W1	208-230/60/1	941	428	15986	3	20	9.0	6.8	R404A	32	908
ICE1006*R1	208-230/60/1	905	411	18149	3	20	13.8	9.3	R404A	240	6804
ICE1006*A2	208-230/60/1	811	369	16239	3	20	13.8	9.0	R404A	34	964
ICE1006*W2	208-230/60/1	941	428	15986	3	20	9.0	6.8	R404A	24	680
ICE1006*R2	208-230/60/1	905	411	18149	3	20	13.8	9.3	R404A	240	6804
ICE1006*R3	208-230/60/1	921	419	18377	3	20	13.8	9.3	R404A	176	4990
ICE1006*A3	208-230/60/1	780	355	16024	3	20	14.2	9.0	R404A	34	964
ICE1006*W3	208-230/60/1	856	389	15355	3	20	12.8	9.8	R404A	29	822
ICE1006*R4	208-230/60/1	843	383	17161	3	20	13.8	9.3	R404A	176	4990
ICE1006*A4	208-230/60/1	780	355	16024	3	20	14.2	9.0	R404A	34	964
ICE1006*W4	208-230/60/1	856	389	15355	3	20	12.8	9.8	R404A	29	822
ICE1006*W5	208-230/60/1	856	389	15355	3	20	12.8	9.8	R404A	33	936
ICE1006*W6	208-230/60/1	856	389	15355	3	20	12.8	9.8	R404A	33	936

Model	Voltage Hz/Phase	24 Hour Capacity @ 90/70 Lbs.	Kg.	BTUH	Wires Including Ground	Max Fuse Size	Min. Circuit Amps	Comp. RLA	**Refrigerant Type	Oz.	Grams
ICE1006*A5	208-230/60/1	760	345	16024	3	20	14.2	9.0	R404A	34	964
ICE1006*A6	208-230/60/1	793	360	16024	3	20	14.2	9.0	R404A	38	1077
ICE1006*A7	208-230/60/1	793	360	16024	3	20	14.2	9.0	R404A	38	1077
ICE1006*R5	208-230/60/1	843	383	17161	3	20	13.8	9.3	R404A	176	4990
ICE1006*R6	208-230/60/1	843	383	17161	3	20	13.8	9.3	R404A	176	4990
ICE1006*R7	208-230/60/1	843	383	17161	3	20	13.8	9.3	R404A	176	4990
ICE1007*W1	208-230/60/3	906	412	16487	4	15	7.1	5.3	R404A	32	908
ICE1007*R1	208-230/60/3	844	384	17653	4	15	10.8	6.9	R404A	240	6804
ICE1007*A2	208-230/60/3	767	349	15614	4	15	11.8	7.4	R404A	34	964
ICE1007*W2	208-230/60/3	906	412	16487	4	15	7.1	5.3	R404A	24	680
ICE1007*R2	208-230/60/3	844	384	17653	4	15	10.8	6.9	R404A	240	6804
ICE1007*R3	208-230/60/3	844	384	17653	4	15	10.8	6.9	R404A	176	4990
ICE1007*A3	208-230/60/3	767	349	15490	4	15	12.2	7.4	R404A	34	964
ICE1007*W3	208-230/60/3	906	412	14996	4	15	7.1	5.3	R404A	29	822
ICE1007*R4	208-230/60/3	844	384	15317	4	15	10.8	6.9	R404A	176	4990
ICE1007*A4	208-230/60/3	767	349	15490	4	15	12.2	7.4	R404A	34	964
ICE1007*W4	208-230/60/3	935	425	14996	4	15	7.1	5.3	R404A	29	822
ICE1007*A5	208-230/60/3	767	349	15490	4	15	12.2	7.4	R404A	34	964
ICE1007*R4	208-230/60/3	781	354	15317	4	15	10.8	6.9	R404A	176	4990
ICE1007*R5	208-230/60/3	781	354	15317	4	15	10.8	6.9	R404A	176	4990
ICE1007*A6	208-230/60/3	800	363	15490	4	15	12.2	7.4	R404A	34	964
ICE1406*A1	208-230/60/1	1122	510	22590	3	30	20.2	13.8	R404A	108	3062
ICE1406*W1	208-230/60/1	1187	540	22529	3	20	15.6	11.7	R404A	28	794
ICE1406*R1	208-230/60/1	1134	515	23085	3	25	23.3	16.5	R404A	240	6804
ICE1406*A2	208-230/60/1	1122	510	22590	3	30	20.2	13.8	R404A	104	2948
ICE1406*W2	208-230/60/1	1187	540	22529	3	20	15.6	11.7	R404A	25	709
ICE1406*R2	208-230/60/1	1134	515	23085	3	25	23.3	16.5	R404A	240	6804
ICE1406*A3	208-230/60/1	1109	504	21957	3	30	26.1	17.9	R404A	60	1701
ICE1406*W3	208-230/60/1	1239	563	21994	3	20	17.8	13.5	R404A	30	851
ICE1406*R3	208-230/60/1	1150	523	22126	3	30	22.2	15.7	R404A	240	6804
ICE1406*A4	208-230/60/1	1109	504	21957	3	30	26.1	17.9	R404A	60	1701
ICE1406*W4	208-230/60/1	1239	563	21994	3	20	17.8	13.5	R404A	30	851
ICE1406*R4	208-230/60/1	1150	523	22126	3	30	22.2	15.7	R404A	240	6804
ICE1406*A5	208-230/60/1	1109	504	21957	3	30	26.1	17.9	R404A	60	1701
ICE1406*A6	208-230/60/1	1136	515	22069	3	30	26.1	17.9	R404A	60	1701
ICE1406*W5	208-230/60/1	1239	563	21994	3	20	17.8	13.5	R404A	30	850
ICE1406*R5	208-230/60/1	1150	523	22126	3	30	22.2	15.7	R404A	240	6804
ICE1407*A1	208-230/60/3	989	450	19765	4	25	15.1	9.7	R404A	108	3062
ICE1407*W1	208-230/60/3	1093	497	19809	4	20	9.8	7.1	R404A	28	794
ICE1407*R1	208-230/60/3	956	435	20173	4	25	14.0	9.1	R404A	240	6804
ICE1407*A2	208-230/60/3	989	450	19765	4	25	15.1	9.7	R404A	104	2948
ICE1407*W2	208-230/60/3	1093	497	19809	4	20	9.8	7.1	R404A	25	709
ICE1407*R2	208-230/60/3	956	435	20173	4	25	14.0	9.1	R404A	240	6804
ICE1407*A3	208-230/60/3	1131	514	21761	4	20	16.0	9.8	R404A	60	1701
ICE1407*W3	208-230/60/3	1270	577	22308	4	20	10.7	7.8	R404A	30	851
ICE1407*R3	208-230/60/3	1195	543	22547	4	20	14.7	9.8	R404A	240	6804
ICE1407*A4	208-230/60/3	1131	514	21761	4	20	16.0	9.8	R404A	60	1701
ICE1407*W4	208-230/60/3	1270	577	22308	4	20	10.7	7.8	R404A	30	851
ICE1407*R4	208-230/60/3	1195	543	22547	4	20	14.7	9.8	R404A	240	6804
ICE1407*A5	208-230/60/3	1131	514	21761	4	20	16.0	9.8	R404A	60	1701
ICE1407*W5	208-230/60/3	1270	577	22308	4	20	10.7	7.8	R404A	30	850
ICE1407*R5	208-230/60/3	1195	543	22547	4	20	14.7	9.7	R404A	240	6804

Model	Voltage Hz/Phase	24 Hour Capacity @ 90/70 Lbs.	Kg.	BTUH	Wires Including Ground	Max Fuse Size	Min. Circuit Amps	Comp. RLA	**Refrigerant Type	Oz.	Grams
ICE1506*R	208-230/60/1	1202	559	24337	3	30	27.4	19.8	R404A	240	6804
ICE1506*R2	208-230/60/1	1207	549	22999	3	30	24.5	17.5	R404A	240	6804
ICE1506*R3	208-230/60/1	1207	549	22999	3	30	24.5	17.5	R404A	240	6804
ICE1506*R4	208-230/60/1	1216	553	22491	3	30	24.5	17.5	R404A	240	6804
ICE1506*R5	208-230/60/1	1216	553	22491	3	30	24.5	17.5	R404A	240	6804
ICE1606*R1	208-230/60/1	1240	564	24343	3	30	25.8	18.6	R404A	240	6804
ICE1806*W1	208-230/60/1	1461	664	25663	3	30	17.0	12.9	R404A	42	1191
ICE1806*R1	208-230/60/1	1468	667	27152	3	30	22.3	15.7	R404A	400	11340
ICE1806*W2	208-230/60/1	1461	664	25663	3	30	17.0	12.9	R404A	35	992
ICE1806*R2	208-230/60/1	1468	667	27152	3	30	22.3	15.7	R404A	400	11340
ICE1806*W3	208-230/60/1	1628	740	27687	3	30	22.0	16.9	R404A	37	1049
ICE1806*R3	208-230/60/1	1461	664	28110	3	30	27.7	20.1	R404A	272	7711
ICE1806*W4	208-230/60/1	1628	740	27687	3	30	22.0	16.9	R404A	37	1049
ICE1806*R4	208-230/60/1	1461	664	28110	3	30	27.7	20.1	R404A	272	7711
ICE1806*W5	208-230/60/1	1628	740	27687	3	30	22.0	16.9	R404A	44	1247
ICE1806*R5	208-230/60/1	1461	664	28110	3	30	27.7	20.1	R404A	272	7711
ICE1807*W1	208-230/60/3	1556	707	27146	4	15	10.7	7.8	R404A	42	1191
ICE1807*R1	208-230/60/3	1491	678	27966	4	15	15.5	10.3	R404A	400	11340
ICE1807*W2	208-230/60/3	1556	707	27146	4	15	10.7	7.8	R404A	42	1191
ICE1807*R2	208-230/60/3	1491	678	27966	4	15	15.5	10.3	R404A	400	11340
ICE1807*W3	208-230/60/3	1603	729	27560	4	15	12.3	9.1	R404A	37	1049
ICE1807*R3	208-230/60/3	1444	656	27514	4	20	17.1	11.6	R404A	272	7711
ICE1807*W4	208-230/60/3	1603	729	27560	4	15	12.3	9.1	R404A	37	1049
ICE1807*R4	208-230/60/3	1444	656	27514	4	20	17.1	11.6	R404A	272	7711
ICE1807*W5	208-230/60/3	1603	729	27560	4	15	12.3	9.1	R404A	37	1049
ICE1807*R5	208-230/60/3	1444	656	27514	4	20	17.1	11.6	R404A	272	7711
ICE1807*W5	208-230/60/3	1603	729	27560	4	15	12.3	9.1	R404A	37	1049
ICE1807*R5	208-230/60/3	1444	656	27514	4	20	17.1	11.6	R404A	272	7711
ICE2106*W1	208-230/60/1	1855	843	33333	3	30	28.5	22.1	R404A	50	1418
ICE2106*R1	208-230/60/1	1723	783	35369	3	50	43.1	31.0	R404A	400	11340
ICE2106*W2	208-230/60/1	1855	843	33333	3	30	25.3	19.5	R404A	37	1049
ICE2106*R2	208-230/60/1	1723	783	35369	3	50	33.7	23.5	R404A	400	11340
ICE2106*W3	208-230/60/1	1692	769	29406	3	30	22.3	17.1	R404A	44	1247
ICE2106*R3	208-230/60/1	1561	710	30325	3	30	26.9	18.1	R404A	272	7711
ICE2106*W4	208-230/60/1	1692	769	29406	3	30	22.3	17.1	R404A	44	1247
ICE2106*R4	208-230/60/1	1561	710	30325	3	30	26.9	18.1	R404A	272	7711
ICE2106*W5	208-230/60/1	1650	750	29091	3	30	22.3	17.1	R404A	44	1274
ICE2106*R5	208-230/60/1	1561	710	30034	3	30	26.9	18.1	R404A	272	7711
ICE2107*W1	208-230/60/3	1853	842	32928	4	20	13.9	10.4	R404A	50	1418
ICE2107*R1	208-230/60/3	1737	790	34714	4	25	22.3	14.4	R404A	400	11340
ICE2107*W2	208-230/60/3	1853	842	32928	4	20	16.6	12.6	R404A	37	1049
ICE2107*R2	208-230/60/3	1737	790	34714	4	25	23.2	15.1	R404A	400	11340
ICE2107*W3	208-230/60/3	1650	750	28676	4	30	13.5	10.1	R404A	44	1247
ICE2107*R3	208-230/60/3	1525	693	29342	4	25	21.2	13.5	R404A	272	7711
ICE2107*W4	208-230/60/3	1650	750	28676	4	30	13.5	10.1	R404A	44	1247
ICE2107*R4	208-230/60/3	1525	693	29342	4	25	21.2	13.5	R404A	272	7711
ICE2107*W5	208-230/60/3	1650	750	28369	4	30	13.5	10.1	R404A	44	1247
ICE2107*R5	208-230/60/3	1525	693	29342	4	25	21.2	13.5	R404A	272	7711

Model	Voltage Hz/Phase	24 Hour Capacity @ 90°/70° Lbs.	Kg.	BTUH	Wires Including Ground	Max Fuse Size	Min. Circuit Amps	Comp. RLA	**Refrigerant Type	Oz.	Grams
ICEU205*A1	230/50/1	145	66	3842	3	15	6.0	4.1	R-134a	14	397
ICEU205*W1	230/50/1	175	80	3768	3	15	5.6	4.2	R-134a	11	312
ICEU205*A2	230/50/1	145	66	3842	3	15	6.0	4.1	R-134a	14	397
ICEU205*W2	230/50/1	175	80	3768	3	15	5.6	4.2	R-134a	11	312
ICEU225*A1	230/50/1	143	65	3774	3	15	4.9	3.3	R404A	12	340
ICEU225*W1	230/50/1	174	79	3780	3	15	4.1	3.0	R404A	9	256
ICEU225*A2	230/50/1	143	65	3774	3	15	4.9	3.3	R404A	12	340
ICEU225*W2	230/50/1	174	79	3780	3	15	4.1	3.0	R404A	9	256
ICEU225*A3	230/50/1	143	65	3774	3	16	4.9	3.3	R404A	12	340
ICEU225*W3	230/50/1	174	79	3780	3	16	4.1	3.0	R404A	9	256
ICEU305A1	230/50/1	223	101	5392	3	15	6.4	4.2	R404A	14	397
ICEU305W1	230/50/1	267	121	5080	3	15	4.7	3.5	R404A	13	369
ICEU305A2	230/50/1	223	101	5392	3	16	6.6	4.2	R404A	14	397
ICEU305W2	230/50/1	267	121	5353	3	16	8.3	3.5	R404A	13	369
ICE0305*A2	230/50/1	266	121	7079	3	15	12.4	8.2	R404A	26	737
ICE0305*W2	230/50/1	291	132	6590	3	15	8.5	8.2	R404A	14	397
ICE0305*A3	230/50/1	266	121	7079	3	16	12.4	8.2	R404A	23	652
ICE0305*W3	230/50/1	291	132	6590	3	16	8.5	8.2	R404A	14	400
ICE0305*A4	230/50/1	279	127	6689	3	16	8.4	5.8	R404A	23	652
ICE0305*W4	230/50/1	296	135	6265	3	16	6.6	5.0	R404A	12	340
ICE0305*A5	230/50/1	279	127	6689	3	16	8.4	5.8	R404A	23	652
ICE0305*W5	230/50/1	296	135	6265	3	16	6.6	5.0	R404A	12	340
ICE0325*A1	230/50/1	214	97	4990	3	15	6.2	4.4	R404A	22	624
ICE0325*A2	230/50/1	214	97	4990	3	15	6.2	4.4	R404A	22	624
ICE0325*A3	230/50/1	214	97	4990	3	16	6.6	4.4	R404A	22	624
ICE0325*A4	230/50/1	214	97	4990	3	16	6.6	4.4	R404A	22	624
ICE0325*A5	230/50/1	214	97	4990	3	16	6.6	4.4	R404A	22	624
ICE0405*A1	230/50/1	370	168	9371	3	15	13.3	8.2	R404A	32	907
ICE0405*W1	230/50/1	470	214	8562	3	15	10.1	8.2	R404A	16	454
ICE0405*A2	230/50/1	370	168	9371	3	15	13.3	8.2	R404A	23	652
ICE0405*W2	230/50/1	470	214	8562	3	15	10.1	8.2	R404A	16	454
ICE0405*A3	230/50/1	366	166	7735	3	16	8.2	5.4	R404A	23	652
ICE0405*W3	230/50/1	440	200	8213	3	16	6.2	4.4	R404A	13	369
ICE0405*A4	230/50/1	366	166	7735	3	16	8.2	5.4	R404A	23	652
ICE0405*W4	230/50/1	440	200	8213	3	16	6.2	4.4	R404A	13	369
ICE0525*A1	230/50/1	478	217	8061	3	15	7.8	5.1	R404A	21	595
ICE0525*A2	230/50/1	478	217	8061	3	15	7.8	5.1	R404A	21	595
ICE0525*A3	230/50/1	404	184	8617	3	16	9.2	5.5	R404A	21	595
ICE0525*A4	230/50/1	404	184	8617	3	16	9.2	5.5	R404A	21	595
ICE0525*A5	230/50/1	404	184	8617	3	16	9.2	5.5	R404A	21	595
ICE0605*A1	230/50/1	466	212	10284	3	15	8.8	8.4	R404A	32	907
ICE0605*W1	230/50/1	470	214	9909	3	15	6.8	8.4	R404A	14	397
ICE0605*R1	230/50/1	425	193	10708	3	15	9.9	8.4	R404A	160	4536
ICE0605*A2	230/50/1	466	212	10284	3	15	8.8	8.4	R404A	22	624
ICE0605*W2	230/50/1	470	214	9909	3	15	6.8	8.4	R404A	14	397
ICE0605*R2	230/50/1	425	193	10708	3	15	9.9	8.4	R404A	160	4536
ICE0605*R3	230/50/1	425	193	10708	3	15	9.9	8.4	R404A	132	3742
ICE0605*A3	230/50/1	459	209	9523	3	16	8.7	6.7	R404A	22	624
ICE0605*W3	230/50/1	523	238	9684	3	16	6.8	5.4	R404A	14	397
ICE0605*R4	230/50/1	474	215	10138	3	16	9.9	6.3	R404A	132	3742
ICE0605*A4	230/50/1	459	209	9523	3	16	8.7	6.7	R404A	22	624
ICE0605*W4	230/50/1	523	238	9684	3	16	6.8	5.4	R404A	14	397
ICE0605*R5	230/50/1	474	215	10138	3	16	9.9	6.3	R404A	132	3742
ICE0605*A5	230/50/1	459	209	9523	3	16	9.5	6.5	R404A	24	680
ICE0605*W5	230/50/1	523	238	9684	3	16	8.7	5.3	R404A	17	482
ICE0605*R6	230/50/1	474	215	10138	3	16	10.4	6.5	R404A	112	3175

Model	Voltage Hz/Phase	24 Hour Capacity @ 90°/70° Lbs.	Kg.	BTUH	Wires Including Ground	Max Fuse Size	Min. Circuit Amps	Comp. RLA	**Refrigerant Type	Oz.	Grams
ICE0805*A1	230/50/1	615	280	13321	3	15	12.0	10.9	R404A	41	1162
ICE0805*W1	230/50/1	855	389	14382	3	15	9.2	10.9	R404A	29	822
ICE0805*R1	230/50/1	738	335	14474	3	15	13.0	10.9	R404A	240	6804
ICE0805*A2	230/50/1	615	280	13321	3	15	12.0	10.9	R404A	27	765
ICE0805*W2	230/50/1	855	389	14382	3	16	9.2	10.9	R404A	24	680
ICE0805*R2	230/50/1	738	335	14474	3	16	13.0	10.9	R404A	240	6804
ICE0805*R3	230/50/1	738	335	14474	3	16	13.0	10.9	R404A	176	4990
ICE0805*A3	230/50/1	615	280	11865	3	16	11.7	8.2	R404A	31	879
ICE0805*W3	230/50/1	855	389	14354	3	16	9.2	6.9	R404A	28	794
ICE0805*R4	230/50/1	738	335	14729	3	16	14.6	9.8	R404A	176	4990
ICE0805*A4	230/50/1	648	295	11865	3	16	11.7	8.2	R404A	31	879
ICE0805*W4	230/50/1	792	360	14354	3	16	9.2	6.9	R404A	28	794
ICE0805*R5	230/50/1	737	335	14729	3	16	14.6	9.8	R404A	176	4990
ICE1005*A1	230/50/1	742	337	15699	3	15	13.3	12.5	R404A	50	1417
ICE1005*W1	230/50/1	917	417	16005	3	15	9.5	12.5	R404A	32	907
ICE1005*R1	230/50/1	801	364	16127	3	15	15.1	12.5	R404A	240	6804
ICE1005*A2	230/50/1	742	337	15699	3	15	13.3	12.5	R404A	33	936
ICE1005*W2	230/50/1	917	417	16005	3	16	9.5	12.5	R404A	24	680
ICE1005*R2	230/50/1	801	364	16127	3	16	15.1	12.5	R404A	240	6804
ICE1005*R3	230/50/1	801	364	16127	3	16	15.1	12.5	R404A	176	4990
ICE1005*A3	230/50/1	742	337	15887	3	16	12.6	8.3	R404A	34	964
ICE1005*W3	230/50/1	917	417	16325	3	16	12.0	9.1	R404A	29	822
ICE1005*R4	230/50/1	801	364	16610	3	16	15.2	10.3	R404A	176	4990
ICE1005*A4	230/50/1	766	348	15594	3	16	12.6	8.3	R404A	34	964
ICE1005*W4	230/50/1	871	396	15624	3	16	12.0	7.1	R404A	29	822
ICE1005*R5	230/50/1	778	354	15838	3	16	15.2	10.3	R404A	16	4990
ICE1405*A1	230/50/1	901	410	19348	3	25	20.8	15.4	R404A	108	3062
ICE1405*W1	230/50/1	1107	503	20269	3	20	15.4	15.4	R404A	28	794
ICE1405*R1	230/50/1	1002	455	21330	3	25	18.1	15.4	R404A	240	6804
ICE1405*A2	230/50/1	901	410	19348	3	25	20.8	15.4	R404A	104	2950
ICE1405*W2	230/50/1	1107	503	20269	3	20	15.4	15.4	R404A	25	710
ICE1405*R2	230/50/1	1002	455	21330	3	25	18.1	15.4	R404A	240	6804
ICE1405*A3	230/50/1	1070	486	21185	3	30	21.7	15.5	R404A	60	1701
ICE1405*W3	230/50/1	1185	539	21035	3	20	15.1	11.5	R404A	25	710
ICE1405*R3	230/50/1	1139	518	22239	3	30	21.9	15.6	R404A	240	6804
ICE1405*A4	230/50/1	1070	486	21185	3	30	21.7	15.5	R404A	60	1701
ICE1405*W4	230/50/1	1185	539	21035	3	20	15.1	11.5	R404A	25	710
ICE1405*R4	230/50/1	1139	518	22239	3	30	21.9	15.6	R404A	240	6804
ICE1405*A5	230/50/1	1070	486	21185	3	30	21.7	15.5	R404A	60	1701
ICE1405*W5	230/50/1	1185	539	21035	3	20	15.1	11.5	R404A	25	710
ICE1405*R5	230/50/1	1139	518	22339	3	30	21.9	15.6	R404A	240	6804

Model	Ref. Type	Charge Ounces	Back Press. Approx.	Head Press. Approx.	Timer Initiate Setting*	Cycle Time Approx. Minutes 70/50-90/70	Batch Weight Pounds	Volt. Cycle Phase
ICEU150*A1	R-404a	13	65 - 44	175 - 400	44	25 - 45	3	115-60-1
ICEU150*W1	R-404a	10	65 - 50	250	50	25 - 45	3	115-60-1
ICEU150*A2	R-404a	13	65 - 44	175 - 400	44	25 - 45	3	115-60-1
ICEU150*W2	R-404a	10	65 - 50	250	50	25 - 45	3	115-60-1
ICEU150A**3**	R-404a	12	60 - 47	205-400	47	24 - 38	3	115-60-1
ICEU150W**3**	R-404a	9	60 - 47	250	47	22 - 28	3	115-60-1
ICEU150A**4**	R-404a	12	60 - 47	205-400	47	24 - 38	3	115-60-1
ICEU150W**4**	R-404a	9	60 - 47	250	47	22 - 28	3	115-60-1
ICEU150A**5**	R-404a	12	60 - 44	205-400	44	24 - 38	3	115-60-1
ICEU150W**5**	R-404a	9	60 - 44	250	44	22 - 28	3	115-60-1
ICEU200*A1	R-404a	13	65 - 42	175 - 400	42	19 - 36	3	115-60-1
ICEU200*W1	R-404a	9	65 - 42	250	42	19 - 36	3	115-60-1
ICEU200*A**2**	R-404a	13	65 - 42	175 - 400	42	19 - 36	3	115-60-1
ICEU200*W**2**	R-404a	9	65 - 42	250	42	19 - 36	3	115-60-1
ICEU220A1	R-404a	12	60 - 42	218-400	42	17 - 24	3	115-60-1
ICEU220W1	R-404a	9	60 - 41	250	41	17 - 20	3	115-60-1
ICEU220A2	R-404a	12	60 - 42	218-400	42	17 - 24	3	115-60-1
ICEU220W2	R-404a	9	60 - 41	250	41	17 - 20	3	115-60-1
ICEU220A3	R-404a	12	60 - 41	218-400	41	17 - 24	3	115-60-1
ICEU220W3	R-404a	9	60 - 41	250	41	17 - 20	3	115-60-1
ICEU206*A1	R-134a	14	30 - 13	120 - 170	13	19 - 36	3	230-60-1
ICEU206*W1	R-134a	11	30 - 13	125	13	19 - 36	3	230-60-1
ICEU226A1	R-404a	12	60 - 41	218-400	41	18 - 28	3	230-60-1
ICEU226W1	R-404a	9	60 - 41	250	41	19 - 23	3	230-60-1
ICEU226A2	R-404a	12	60 - 41	218-400	41	18 - 28	3	230-60-1
ICEU226W2	R-404a	9	60 - 41	250	41	19 - 23	3	230-60-1
ICEU226A3	R-404a	12	60 - 41	218-400	41	18 - 28	3	230-60-1
ICEU226W3	R-404a	9	60 - 41	250	41	19 - 23	3	230-60-1
ICEU300A	R-404a	16	51 - 30	218-400	33	15 - 20	3	115-60-1
ICEU300W	R-404a	13	60 - 27	250	33	12 - 15	3	115-60-1
ICEU300A2	R-404a	16	51 - 35	218-400	35	15 - 20	3	115-60-1
ICEU300W2	R-404a	13	60 - 35	250	35	12 - 15	3	115-60-1
ICE0250*A2	R-404a	16	60 - 35	175 - 400	35	12 - 22	3	115-60-1
ICE0250*A-T2	R-404a	16	60 - 37	175 - 400	37	12 - 22	3	115-60-1
ICE0250*W2	R-404a	13	60 - 35	250	35	12 - 19	3	115-60-1
ICE0250*A**4**	R-404a	25	60 - 35	200 - 400	36	13 - 17	3	115-60-1
ICE0250*A-T**4**	R-404a	25	60 - 37	200 - 400	36	13 - 17	3	115-60-1
ICE0250*W**4**	R-404a	13	60 - 35	250	35	13 - 17	3	115-60-1
ICE0250*A**5**	R-404a	25	60 - 32	200 - 400	32	13 - 17	3	115-60-1
ICE0250*A-T**5**	R-404a	25	60 - 37	200 - 400	36	13 - 17	3	115-60-1
ICE0250*W**5**	R-404a	13	60 - 32	250	32	13 - 17	3	115-60-1
ICE0250*T6	R-404a	13	60 - 32	250	32	13 - 17	3	115-60-1
ICE0320*A1	R-404a	18	60 - 36	175 - 400	36	14 - 25	3	115-60-1
ICE0320*W1	R-404a	15	60 - 36	250	36	12 - 17	3	115-60-1
ICE0320*A2	R-404a	18	60 - 36	175 - 400	36	14 - 25	3	115-60-1
ICE0320*W2	R-404a	11	60 - 36	250	36	12 - 17	3	115-60-1
ICE0320*A**3**	R-404a	18	60 - 36	200 - 400	36	14 - 25	3	115-60-1
ICE0320*W**3**	R-404a	11	60 - 36	250	36	12 - 17	3	115-60-1
ICE0320*A**4**	R-404a	18	60 - 32	200 - 400	32	14 - 25	3	115-60-1
ICE0320*W**4**	R-404a	11	60 - 32	250	32	12 - 17	3	115-60-1

Model	Ref. Type	Charge Ounces	Back Press. Approx.	Head Press. Approx.	Timer Initiate Setting*	Cycle Time Approx. Minutes 70/50-90/70	Batch Weight Pounds	Volt. Cycle Phase
ICE0400*A1	R-404a	32	65 - 41	175 - 400	41	16 - 21	5.5	115-60-1
ICE0400*A-T1	R-404a	32	65 - 41	175 - 400	41	16 - 26	5.5	115-60-1
ICE0400*W1	R-404a	14	60 - 35	250	35	15 - 21	5.5	115-60-1
ICE0400*A2	R-404a	29	65 - 41	175 - 400	41	16 - 21	5.5	115-60-1
ICE0400*A-T2	R-404a	29	65 - 41	175 - 400	41	16 - 26	5.5	115-60-1
ICE0400*W2	R-404a	14	60 - 35	250	35	15 - 21	5.5	115-60-1
ICE0400*A3	R-404a	30	54 - 39	200-400	44	14 - 20	5.5	115-60-1
ICE0400*A-T3	R-404a	30	56 - 37	213-400	44	14 - 21	5.5	115-60-1
ICE0400*W3	R-404a	14	60 - 38	250	43	14 - 18	5.5	115-60-1
ICE0400*A4	R-404a	30	54 - 39	200-400	44	14 - 20	5.5	115-60-1
ICE0400*A-T4	R-404a	30	56 - 37	213-400	44	14 - 21	5.5	115-60-1
ICE0400*W4	R-404a	14	60 - 41	250	41	14 - 18	5.5	115-60-1
ICE0400*T5	R-404a	30	56 - 37	213-400	44	14 - 21	5.5	115-60-1
ICE0400*A5	R-404a	30	54 - 41	200-400	41	14 - 20	5.5	115-60-1
ICE0400*T6	R-404a	30	56 - 41	213-400	41	14 - 21	5.5	115-60-1
ICE0406*A1	R-404a	32	60 - 35	175 - 400	35	17 - 30	5.5	208/230-60-1
ICE0406*W1	R-404a	16	60 - 35	250	35	17 - 25	5.5	208/230-60-1
ICE0406*A2	R-404a	32	60 - 35	175 - 400	35	17 - 25	5.5	208/230-60-1
ICE0406*W2	R-404a	16	60 - 35	250	35	17 - 25	5.5	208/230-60-1
ICE0406*A3	R-404a	30	58 - 34	200 - 400	43	14 -19	5.5	208/230-60-1
ICE0406*W3	R-404a	14	57 - 37	250	43	14 - 17	5.5	208/230-60-1
ICE0406*A4	R-404a	30	58 - 41	200 - 400	41	14 -19	5.5	208/230-60-1
ICE0406*W4	R-404a	14	57 - 41	250	41	14 - 17	5.5	208/230-60-1
ICE0500*A1	R-404a	37	60 - 37	175 - 400	37	13 - 21	5.5	115-60-1
ICE0500*A-T1	R-404a	37	60 - 37	175 - 400	37	13 - 21	5.5	115-60-1
ICE0500*W1	R-404a	15	60 - 35	250	35	13 - 21	5.5	115-60-1
ICE0500*R1	R-404a	160	60 - 35	192 - 400	35	13 - 22	5.5	115-60-1
ICE0500*A2	R-404a	22	60 - 37	175 - 400	37	13 - 21	5.5	115-60-1
ICE0500*A-T2	R-404a	22	60 - 37	175 - 400	37	13 - 21	5.5	115-60-1
ICE0500*W2	R-404a	15	60 - 35	250	35	13 - 21	5.5	115-60-1
ICE0500*R2	R-404a	160	60 - 35	240 - 400	35	13 - 22	5.5	115-60-1
ICE0500*R3	R-404a	132	60 - 35	240 - 400	35	13 - 22	5.5	115-60-1
ICE0500*A3	R-404a	25	55 - 31	217 - 400	37	13 - 16	5.5	115-60-1
ICE0500*A-T3	R-404a	25	60 - 32	212 - 400	39	13 - 16	5.5	115-60-1
ICE0500*W3	R-404a	15	48 - 31	250	38	13 - 15	5.5	115-60-1
ICE0500*R4	R-404a	132	50 - 32	240 - 400	39	13 - 16	5.5	115-60-1
ICE0500*A4	R-404a	25	55 - 31	217 - 400	37	13 - 16	5.5	115-60-1
ICE0500*A-T4	R-404a	25	60 - 32	212 - 400	39	13 - 16	5.5	115-60-1
ICE0500*A-T5	R-404a	25	60 - 32	212 - 400	39	13 - 16	5.5	115-60-1
ICE0500*W4	R-404a	15	48 - 37	250	37	13 - 15	5.5	115-60-1
ICE0500*A5	R-404a	25	55 - 37	217 - 400	37	13 - 16	5.5	115-60-1
ICE0500*T6	R-404a	25	60 - 37	212 - 400	37	13 - 16	5.5	115-60-1
ICE0500*R5	R-404a	132	50 - 37	240 - 400	37	13 - 16	5.5	115-60-1
ICE0520*A1	R-404a	32	65 - 41	175 - 400	41	16 - 27	5.5	115-60-1
ICE0520*W1	R-404a	14	65 - 44	250	44	16 - 22	5.5	115-60-1
ICE0520*A2	R-404a	20	65 - 41	175 - 400	41	16 - 27	5.5	115-60-1
ICE0520*W2	R-404a	14	65 - 44	250	44	16 - 22	5.5	115-60-1
ICE0520*A3	R-404a	21	56 - 39	212 - 400	46	14 - 20	5.5	115-60-1
ICE0520*W3	R-404a	12	54 - 39	250	44	14 - 17	5.5	115-60-1
ICE0520*A4	R-404a	21	56 - 44	212 - 400	44	14 - 20	5.5	115-60-1
ICE0520*W4	R-404a	12	54 - 44	250	44	14 - 17	5.5	115-60-1

Model	Ref. Type	Charge Ounces	Back Press. Approx.	Head Press. Approx.	Timer Initiate Setting*	Cycle Time Approx. Minutes 70/50-90/70	Batch Weight Pounds	Volt. Cycle Phase
ICE0606*A1	R-404a	36	60 - 35	175 - 400	35	11 - 19	5.5	208/230-60-1
ICE0606*A-T1	R-404a	36	60 - 35	175 - 400	35	11 - 19	5.5	208/230-60-1
ICE0606*W1	R-404a	18	60 - 35	250	35	12 - 17	5.5	208/230-60-1
ICE0606*R1	R-404a	160	60 - 33	240 - 400	33	11 - 18	5.5	208/230-60-1
ICE0606*A2	R-404a	24	60 - 35	175 - 400	35	11 - 19	5.5	208/230-60-1
ICE0606*A-T2	R-404a	24	60 - 35	175 - 400	35	11 - 19	5.5	208/230-60-1
ICE0606*W2	R-404a	18	60 - 35	250	35	12 - 17	5.5	208/230-60-1
ICE0606*R2	R-404a	160	60 - 33	240 - 400	33	11 - 18	5.5	208/230-60-1
ICE0606*R3	R-404a	132	60 - 33	240 - 400	33	11 - 18	5.5	208/230-60-1
ICE0606*A**3**	R-404a	24	60 - 46	200 - 400	35	11 - 15	5.5	208/230-60-1
ICE0606*A-T**3**	R-404a	24	60 - 46	200 - 400	35	11 - 15	5.5	208/230-60-1
ICE0606*W**3**	R-404a	17	45 - 40	250	34	11 - 13	5.5	208/230-60-1
ICE0606*R**4**	R-404a	132	44 - 42	240 - 400	38	11 - 13	5.5	208/230-60-1
ICE0606*A**4**	R-404a	24	60 - 46	200 - 400	35	11 - 15	5.5	208/230-60-1
ICE0606*A-T**4**	R-404a	24	60 - 46	200 - 400	35	11 - 15	5.5	208/230-60-1
ICE0606*W**4**	R-404a	17	45 - 40	250	34	11 - 13	5.5	208/230-60-1
ICE0606*R**5**	R-404a	132	44 - 42	240 - 400	38	11 - 13	5.5	208/230-60-1
ICE0606*A-T**5**	R-404a	24	60 - 46	200 - 400	35	11 - 15	5.5	208/230-60-1
ICE0606*W**5**	R-404a	17	45 - 32	250	32	11 - 13	5.5	208/230-60-1
ICE0606*A**5**	R-404a	24	60 - 32	200 - 400	32	11 - 15	5.5	208/230-60-1
ICE0606*T**6**	R-404a	24	60 - 32	200 - 400	32	11 - 15	5.5	208/230-60-1
ICE0606*R**6**	R-404a	132	44 - 32	240 - 400	32	11 - 13	5.5	208/230-60-1
ICE0726R	R-404a	156	44 - 32	240 - 400	35	11-18	5.5	208/230-60-1
ICE0806*A1	R-404a	41	60 - 35	175 - 400	35	11 - 18	7	208/230-60-1
ICE0806*W1	R-404a	29	60 - 35	250	35	10 - 15	7	208/230-60-1
ICE0806*R1	R-404a	240	60 - 35	192 - 400	35	9 - 16	7	208/230-60-1
ICE0806*A**2**	R-404a	27	60 - 35	175 - 400	35	11 - 18	7	208/230-60-1
ICE0806*W**2**	R-404a	24	60 - 35	250	35	10 - 15	7	208/230-60-1
ICE0806*R**2**	R-404a	240	60 - 35	240 - 400	35	9 - 16	7	208/230-60-1
ICE0806*R**3**	R-404a	176	60 - 35	240 - 400	35	9 - 16	7	208/230-60-1
ICE0806*A**3**	R-404a	31	61 - 53	240 - 400	41	12 - 16	7	208/230-60-1
ICE0806*W**3**	R-404a	28	60 - 59	250	39	11 - 13	7	208/230-60-1
ICE0806*R**4**	R-404a	176	61 - 54	240 - 400	40	11 - 14	7	208/230-60-1
ICE0806*A**4**	R-404a	31	61 - 53	240 - 400	41	12 - 16	7	208/230-60-1
ICE0806*W**4**	R-404a	28	60 - 59	250	39	11 - 13	7	208/230-60-1
ICE0806*A**5**	R-404a	31	61 - 37	240 - 400	37	12 - 16	7	208/230-60-1
ICE0806*W**5**	R-404a	28	60 - 37	250	37	11 - 13	7	208/230-60-1
ICE0806*R**5**	R-404a	176	61 - 37	240 - 400	37	11 - 14	7	208/230-60-1
ICE0926R	R-404a	156	44 - 32	240 - 400	35	11-18	5.5	208/230-60-1
ICE1006*A1	R-404a	50	60 - 37	175 - 400	37	9 - 15	7	208/230-60-1
ICE1006*W1	R-404a	32	60 - 37	250	37	9 - 13	7	208/230-60-1
ICE1006*R1	R-404a	240	60 - 36	192 - 400	36	9 - 14	7	208/230-60-1
ICE1006*A2	R-404a	34	60 - 37	175 - 400	37	9 - 15	7	208/230-60-1
ICE1006*W2	R-404a	24	60 - 37	250	37	9 - 13	7	208/230-60-1
ICE1006*R2	R-404a	240	60 - 36	240 - 400	36	9 - 14	7	208/230-60-1
ICE1006*R3	R-404a	176	60 - 36	240 - 400	36	9 - 14	7	208/230-60-1
ICE1006*A3	R-404a	34	56 - 46	240 - 400	34	10 - 14	7	208/230-60-1
ICE1006*W3	R-404a	29	50 - 53	250	35	10 - 12	7	208/230-60-1
ICE1006*R4	R-404a	176	50 - 53	240 - 400	32	10 - 12	7	208/230-60-1
ICE1006*A4	R-404a	34	56 - 46	240 - 400	34	10 - 14	7	208/230-60-1
ICE1006*W4	R-404a	29	50 - 37	250	35	10 - 12	7	208/230-60-1
ICE1006*A5	R-404a	34	56 - 37	240 - 400	35	10 - 14	7	208/230-60-1
ICE1006*R5	R-404a	176	50 - 37	240 - 400	32	10 - 12	7	208/230-60-1

Model	Ref. Type	Charge Ounces	Back Press. Approx.	Head Press. Approx.	Timer Initiate Setting*	Cycle Time Approx. Minutes 70/50-90/70	Batch Weight Pounds	Volt. Cycle Phase
ICE1007*A1	R-404a	50	60 - 35	175 - 400	35	10 - 16	7	208/230-60-3
ICE1007*W1	R-404a	32	60 - 35	250	35	10 - 14	7	208/230-60-3
ICE1007*R1	R-404a	240	60 - 35	192 - 400	35	11 - 15	7	208/230-60-3
ICE1007*A**2**	R-404a	34	60 - 35	175 - 400	35	10 - 16	7	208/230-60-3
ICE1007*W**2**	R-404a	24	60 - 35	250	35	10 - 14	7	208/230-60-3
ICE1007*R**2**	R-404a	240	60 - 35	240 - 400	35	11 - 15	7	208/230-60-3
ICE1007*R**3**	R-404a	176	60 - 35	240 - 400	35	11 - 15	7	208/230-60-3
ICE1007*A**3**	R-404a	34	55 - 47	240 - 400	37	11 - 14	7	208/230-60-3
ICE1007*W**3**	R-404a	29	56 - 49	250	35	11 - 13	7	208/230-60-3
ICE1007*R**4**	R-404a	176	57 - 52	240 - 400	39	11 - 13	7	208/230-60-3
ICE1007*A**4**	R-404a	34	55 - 47	240 - 400	37	11 - 14	7	208/230-60-3
ICE1007*W**4**	R-404a	29	56 -35	250	35	11 - 13	7	208/230-60-3
ICE1007*A**5**	R-404a	34	55 - 47	240 - 400	37	11 - 14	7	208/230-60-3
ICE1007*A**6**	R-404a	34	55 - 35	240 - 400	35	11 - 14	7	208/230-60-3
ICE1007*R**5**	R-404a	176	57 - 35	240 - 400	35	11 - 13	7	208/230-60-3
ICE1406*A1	R-404a	108	60 - 35	175 - 400	35	11 - 17	11	208/230-60-1
ICE1406*W1	R-404a	28	60 - 35	250	35	11 - 16	11	208/230-60-1
ICE1406*R1	R-404a	240	60 - 35	192 - 400	35	11 - 17	11	208/230-60-1
ICE1406*A2	R-404a	104	60 - 35	175 - 400	35	11 - 17	11	208/230-60-1
ICE1406*W2	R-404a	25	60 - 35	250	35	11 - 16	11	208/230-60-1
ICE1406*R2	R-404a	240	60 - 35	192 - 400	35	11 - 17	11	208/230-60-1
ICE1406*A**3**	R-404a	60	60 - 35	200 - 400	37	11 - 15	12.4	208/230-60-1
ICE1406*W**3**	R-404a	30	60 - 35	250	32	11 - 14	12.4	208/230-60-1
ICE1406*R**3**	R-404a	240	60 - 35	240 - 400	38	11 - 15	12.4	208/230-60-1
ICE1406*A**4**	R-404a	60	60 - 35	200 - 400	37	11 - 15	12.4	208/230-60-1
ICE1406*W**4**	R-404a	30	60 - 35	250	32	11 - 14	12.4	208/230-60-1
ICE1406*R**4**	R-404a	240	60 - 35	240 - 400	38	11 - 15	12.4	208/230-60-1
ICE1406*A**5**	R-404a	60	60 - 35	200 - 400	37	11 - 15	12.4	208/230-60-1
ICE1406*A**6**	R-404a	60	60 - 35	200 - 400	35	11 - 15	12.4	208/230-60-1
ICE1406*W**5**	R-404a	30	60 - 35	250	32	11 - 14	12.4	208/230-60-1
ICE1406*R**5**	R-404a	240	60 - 35	240 - 400	35	11 - 15	12.4	208/230-60-1
ICE1407*A1	R-404a	108	60 - 35	175 - 400	35	12 - 20	11	208/230-60-3
ICE1407*W1	R-404a	28	60 - 35	250	35	12 - 18	11	208/230-60-3
ICE1407*R1	R-404a	240	60 - 35	192 - 400	35	12 - 20	11	208/230-60-3
ICE1407*A**2**	R-404a	104	60 - 35	175 - 400	35	12 - 20	11	208/230-60-3
ICE1407*W**2**	R-404a	25	60 - 35	250	35	12 - 18	11	208/230-60-3
ICE1407*R**2**	R-404a	240	60 - 35	240 - 400	35	12 - 20	11	208/230-60-3
ICE1407*A**3**	R-404a	60	60 - 35	200 - 400	37	11 - 15	12.4	208/230-60-3
ICE1407*W**3**	R-404a	30	60 - 35	250	34	11 - 13	12.4	208/230-60-3
ICE1407*R**3**	R-404a	240	60 - 35	240 - 400	38	12 - 14	12.4	208/230-60-3
ICE1407*A**4**	R-404a	60	60 - 35	200 - 400	37	11 - 15	12.4	208/230-60-3
ICE1407*W**4**	R-404a	30	60 - 35	250	34	11 - 13	12.4	208/230-60-3
ICE1407*R**4**	R-404a	240	60 - 35	240 - 400	38	12 - 14	12.4	208/230-60-3
ICE1407*A**5**	R-404a	60	60 - 35	200 - 400	35	11 - 15	12.4	208/230-60-3
ICE1407*W**5**	R-404a	30	60 - 32	250	32	11 - 13	12.4	208/230-60-3
ICE1407*R**5**	R-404a	240	60 - 35	240 - 400	35	12 - 14	12.4	208/230-60-3
ICE1506*R	R-404a	240	60 - 35	240 - 400	35	11 - 16	11	208/230-60-1
ICE1506*R2	R-404a	240	60 - 35	240 - 400	35	11 - 16	11	208/230-60-1
ICE1506*R3	R-404a	240	60 - 35	240 - 400	35	11 - 14	12.4	208/230/60/1
ICE1506*R4	R-404a	240	60 - 35	240 - 400	35	11 - 14	12.4	208/230/60/1
ICE1606*R1	R-404a	240	60 - 35	192 - 400	35	11 - 16	11	208/230-60-1

Model	Ref. Type	Charge Ounces	Back Press. Approx.	Head Press. Approx.	Timer Initiate Setting*	Cycle Time Approx. Minutes 70/50-90/80	Batch Weight Pounds	Volt. Phase Cycle
ICE1806*W1	R-404a	42	60 - 34	250	34	11 - 17	14	208/230-60-1
ICE1806*R1	R-404a	400	60 - 37	192 - 400	37	10 - 17	14	208/230-60-1
ICE1806*W2	R-404a	35	60 - 34	250	34	11 - 17	14	208/230-60-1
ICE1806*R2	R-404a	400	60 - 37	240 - 400	37	10 - 17	14	208/230-60-1
ICE1806*W**3**	R-404a	37	60 - 53	250	38	11 - 13	14	208/230-60-1
ICE1806*R**3**	R-404a	272	72 - 61	240 - 400	38	12 - 15	14	208/230-60-1
ICE1806*W**4**	R-404a	37	60 - 53	250	38	11 - 13	14	208/230-60-1
ICE1806*R**4**	R-404a	272	72 - 61	240 - 400	38	12 - 15	14	208/230-60-1
ICE1806*W**5**	R-404a	37	60 - 37	250	37	11 - 13	14	208/230-60-1
ICE1806*R**5**	R-404a	272	72 - 37	240 - 400	37	12 - 15	14	208/230-60-1
ICE1807*W1	R-404a	42	60 - 35	250	35	10 - 16	14	208/230-60-3
ICE1807*R1	R-404a	400	60 - 35	192 - 400	35	10 - 17	14	208/230-60-3
ICE1807*W2	R-404a	35	60 - 35	250	35	10 - 16	14	208/230-60-3
ICE1807*R2	R-404a	400	60 - 35	240 - 400	35	10 - 17	14	208/230-60-3
ICE1807*W**3**	R-404a	37	60 - 53	250	38	11 - 13	14	208/230-60-3
ICE1807*R**3**	R-404a	272	71 - 63	240 - 400	38	13 - 14.5	14	208/230-60-3
ICE1807*W**4**	R-404a	37	60 - 53	250	38	11 - 13	14	208/230-60-3
ICE1807*R**4**	R-404a	272	71 - 63	240 - 400	38	13 - 14.5	14	208/230-60-3
ICE2106*W1	R-404a	50	60 - 35	250	35	9 - 14	14	208/230-60-1
ICE2106*R1	R-404a	400	60 - 37	192 - 400	37	9 - 14	14	208/230-60-1
ICE2106*W2	R-404a	37	60 - 35	250	35	9 - 14	14	208/230-60-1
ICE2106*R2	R-404a	400	60 - 37	240 - 400	37	9 - 14	14	208/230-60-1
ICE2106*W**3**	R-404a	44	48 - 46	250	34	11 - 12	14	208/230-60-1
ICE2106*R**3**	R-404a	272	62 - 56	240 - 400	37	12 - 13	14	208/230-60-1
ICE2106*W**4**	R-404a	44	48 - 46	250	34	11 - 12	14	208/230-60-1
ICE2106*R**4**	R-404a	272	62 - 56	240 - 400	37	12 - 13	14	208/230-60-1
ICE2106*W**5**	R-404a	44	48 - 35	250	35	11 - 12	14	208/230-60-1
ICE2106*R**5**	R-404a	272	62 - 37	240 - 400	37	12 - 13	14	208/230-60-1
ICE2107*W1	R-404a	50	60 - 35	250	35	9 - 13	14	208/230-60-3
ICE2107*R1	R-404a	400	60 - 35	192 - 400	35	9 - 14	14	208/230-60-3
ICE2107*W2	R-404a	37	60 - 35	250	35	9 - 13	14	208/230-60-3
ICE2107*R2	R-404a	400	60 - 35	240 - 400	35	9 - 14	14	208/230-60-3
ICE2107*W**3**	R-404a	44	49 - 47	250	34	12 - 13	14	208/230-60-3
ICE2107*R**3**	R-404a	272	64 - 58	240 - 400	37	12 - 14	14	208/230-60-3
ICE2107*W**4**	R-404a	44	49 - 47	250	34	12 - 13	14	208/230-60-3
ICE2107*R**4**	R-404a	272	64 - 58	240 - 400	37	12 - 14	14	208/230-60-3
ICE2107*W**5**	R-404a	44	49 - 35	250	35	12 - 13	14	208/230-60-3
ICE2107*R**5**	R-404a	272	64 - 35	240 - 400	35	12 - 14	14	208/230-60-3

Model	Ref. Type	Charge Ounces	Back Press. Approx.	Head Press. Approx.	Timer Initiate Setting*	Cycle Time Approx. Minutes 70/50-90/80	Batch Weight Pounds	Volt. Phase Cycle
ICEU205*A1	R-134a	14	30 - 13	120 - 170	13	19 - 36	3	220-240/50/1
ICEU205*W1	R-134a	11	30 - 13	125	13	19 - 36	3	220-240/50/1
ICEU205*A**2**	R-134a	14	30 - 13	120 - 170	13	19 - 36	3	220-240/50/1
ICEU205*W**2**	R-134a	11	30 - 13	125	13	19 - 36	3	220-240/50/1
ICEU225*A1	R-404a	12	60 - 35	175 - 400	45	22 - 32	3	220-240/50/1
ICEU225*W1	R-404a	9	60 - 35	250	46	21 - 25	3	220-240/50/1
ICEU225*A2	R-404a	12	60 - 35	175 - 400	45	22 - 32	3	220-240/50/1
ICEU225*W2	R-404a	9	60 - 35	250	46	21 - 25	3	220-240/50/1
ICEU225*A3	R-404a	12	60 - 41	175 - 400	41	22 - 32	3	220-240/50/1
ICEU225*W3	R-404a	9	60 - 41	250	41	21 - 25	3	220-240/50/1
ICEU305A1	R-404a	14	51 - 30	218-400	33	15 - 20	3	220-240/50/1
ICEU305W1	R-404a	13	60 - 27	250	33	13 - 18	3	220-240/50/1
ICEU305A2	R-404a	14	51 - 35	218-400	35	15 - 20	3	220-240/50/1
ICEU305W2	R-404a	13	60 - 35	250	35	13 - 18	3	220-240/50/1
ICE0305*A2	R-404a	26	60 - 35	175 - 400	35	13 - 20	3	220-240/50/1
ICE0305*W2	R-404a	14	60 - 35	250	35	13 - 18	3	220-240/50/1
ICE0305*A**3**	R-404a	23	60 - 53	200 - 400	32	12 - 16	3	220-240/50/1
ICE0305*W**3**	R-404a	12	48 - 47	250	31	12 - 15	3	220-240/50/1
ICE0305*A**4**	R-404a	23	60 - 53	200 - 400	32	12 - 16	3	220-240/50/1
ICE0305*W**4**	R-404a	12	48 - 47	250	31	12 - 15	3	220-240/50/1
ICE0305*A**5**	R-404a	23	60 - 32	200 - 400	32	12 - 16	3	220-240/50/1
ICE0305*W**5**	R-404a	12	48 - 32	250	32	12 - 15	3	220-240/50/1
ICE0325*A1	R-404a	22	60 - 35	175 - 400	35	13 - 20	3	220-240/50/1
ICE0325*A2	R-404a	22	60 - 35	175 - 400	35	13 - 20	3	220-240/50/1
ICE0325*A**3**	R-404a	33	60 - 35	175 - 400	35	13 - 20	3	220-240/50/1
ICE0325*A**4**	R-404a	33	60 - 32	175 - 400	32	13 - 20	3	220-240/50/1
ICE0405*A1	R-404a	32	60 - 35	175 - 400	35	15 - 26	5.5	220-240/50/1
ICE0405*W1	R-404a	16	60 - 35	250	35	14 - 20	5.5	220-240/50/1
ICE0405*A**2**	R-404a	23	60 - 35	175 - 400	35	15 - 26	5.5	220-240/50/1
ICE0405*W**2**	R-404a	16	60 - 35	250	35	14 - 20	5.5	220-240/50/1
ICE0405*A**2**	R-404a	23	56 - 31	200 - 400	38	17 - 23	5.5	220-240/50/1
ICE0405*W**2**	R-404a	13	54 - 34	250	41	15 - 17	5.5	220-240/50/1
ICE0405*A**3**	R-404a	23	56 - 31	207-400	38	16 - 22	5.5	220-240/50/1
ICE0405*W**3**	R-404a	13	57 - 34	250	41	14 - 17	5.5	220-240/50/1
ICE0405*A**4**	R-404a	23	56 - 37	207-400	37	16 - 22	5.5	220-240/50/1
ICE0405*W**4**	R-404a	13	57 - 37	250	37	14 - 17	5.5	220-240/50/1
ICE0525*A1	R-404a	21	60 - 35	175 - 400	35	15 - 26	5.5	220-240/50/1
ICE0525*A2	R-404a	21	60 - 35	175 - 400	35	15 - 26	5.5	220-240/50/1
ICE0525*A**3**	R-404a	21	55 - 38	200 - 400	46	13 - 18	5.5	220-240/50/1
ICE0525*A**4**	R-404a	21	55 - 35	200 - 400	35	13 - 18	5.5	220-240/50/1
ICE0605*A1	R-404a	32	60 - 35	175 - 400	35	13 - 21	5.5	220-240/50/1
ICE0605*W1	R-404a	14	60 - 35	250	35	14 - 21	5.5	220-240/50/1
ICE0605*R1	R-404a	160	60 - 35	192 - 400	35	14 - 22	5.5	220-240/50/1
ICE0605*A2	R-404a	22	60 - 35	175 - 400	35	13 - 21	5.5	220-240/50/1
ICE0605*W2	R-404a	14	60 - 35	250	35	14 - 21	5.5	220-240/50/1
ICE0605*R2	R-404a	160	60 - 35	240 - 400	35	14 - 22	5.5	220-240/50/1
ICE0605*R3	R-404a	132	60 - 35	240 - 400	35	14 - 22	5.5	220-240/50/1
ICE0605*A**3**	R-404a	22	50 - -46	200 - 400	35	13 - 18	5.5	220-240/50/1
ICE0605*W**3**	R-404a	14	47 - 45	250	32	14 - 16	5.5	220-240/50/1

Model	Ref. Type	Charge Ounces	Back Press. Approx.	Head Press. Approx.	Timer Initiate Setting*	Cycle Time Approx. Minutes 70/50-90/80	Batch Weight Pounds	Volt. Phase Cycle
ICE0605*R**4**	R-404a	132	45 - 43	240 - 400	35	15 - 18	5.5	220-240/50/1
ICE0605*A**4**	R-404a	22	50 - -46	200 - 400	35	13 - 18	5.5	220-240/50/1
ICE0605*W**4**	R-404a	14	47 - 45	250	32	14 - 16	5.5	220-240/50/1
ICE0605*R**5**	R-404a	132	45 - 43	240 - 400	35	15 - 18	5.5	220-240/50/1
ICE0605*A**5**	R-404a	22	50 - 32	200 - 400	32	13 - 18	5.5	220-240/50/1
ICE0605*W**5**	R-404a	14	47 - 35	250	35	14 - 16	5.5	220-240/50/1
ICE0605*R**6**	R-404a	132	45 - 37	240 - 400	37	15 - 18	5.5	220-240/50/1
ICE0805*A1	R-404a	41	60 - 35	175 - 400	35	11 - 20	7	220-240/50/1
ICE0805*W1	R-404a	29	60 - 35	250	35	10 - 14	7	220-240/50/1
ICE0805*R1	R-404a	240	60 - 35	192 - 400	35	10 - 17	7	220-240/50/1
ICE0805*A2	R-404a	27	60 - 35	175 - 400	35	11 - 20	7	220-240/50/1
ICE0805*W2	R-404a	24	60 - 35	250	35	10 - 14	7	220-240/50/1
ICE0805*R2	R-404a	240	60 - 35	240 - 400	35	10 - 17	7	220-240/50/1
ICE0805*R3	R-404a	176	60 - 35	240 - 400	35	10 - 17	7	220-240/50/1
ICE0805*A3	R-404a	31	76 - 66	240 - 400	41	12 - 17	7	220-240/50/1
ICE0805*W3	R-404a	28	61 - 59	250	40	12 - 13	7	220-240/50/1
ICE0805*R4	R-404a	176	68 - 60	240 - 400	39	12 - 15	7	220-240/50/1
ICE0805*A4	R-404a	31	76 - 37	240 - 400	37	12 - 17	7	220-240/50/1
ICE0805*W4	R-404a	28	61 - 37	250	37	12 - 13	7	220-240/50/1
ICE0805*R5	R-404a	176	68 - 37	240 - 400	37	12 - 15	7	220-240/50/1
ICE1005*A1	R-404a	50	60 - 35	175 - 400	35	10 - 17	7	220-240/50/1
ICE1005*W1	R-404a	32	60 - 36	250	36	9 - 14	7	220-240/50/1
ICE1005*R1	R-404a	240	60 - 35	192 - 400	35	9 - 15	7	220-240/50/1
ICE1005*A2	R-404a	33	60 - 35	175 - 400	35	10 - 17	7	220-240/50/1
ICE1005*W2	R-404a	24	60 - 36	250	36	9 - 14	7	220-240/50/1
ICE1005*R2	R-404a	240	60 - 35	240 - 400	35	9 - 15	7	220-240/50/1
ICE1005*R3	R-404a	176	60 - 35	240 - 400	35	9 - 15	7	220-240/50/1
ICE1005*A3	R-404a	34	60 - 52	240 - 400	39	10 - 14	7	220-240/50/1
ICE1005*W3	R-404a	29	52 - 51	250	39	11 - 12	7	220-240/50/1
ICE1005*R4	R-404a	176	69 - 61	240 - 400	38	11 - 14	7	220-240/50/1
ICE1005*A4	R-404a	34	60 - 35	240 - 400	35	10 - 14	7	220-240/50/1
ICE1005*W4	R-404a	29	52 - 35	250	35	11 - 12	7	220-240/50/1
ICE1005*R5	R-404a	176	69 - 35	240 - 400	35	11 - 14	7	220-240/50/1
ICE1405*A1	R-404a	108	60 - 35	175 - 400	35	13 - 21	11	220-240/50/1
ICE1405*W1	R-404a	28	60 - 35	250	35	12 - 18	11	220-240/50/1
ICE1405*R1	R-404a	240	60 - 35	192 - 400	35	14 - 19	11	220-240/50/1
ICE1405*A2	R-404a	104	60 - 35	175 - 400	35	13 - 21	11	220-240/50/1
ICE1405*W2	R-404a	25	60 - 35	250	35	12 - 18	11	220-240/50/1
ICE1405*R2	R-404a	240	60 - 35	192 - 400	35	14 - 19	11	220-240/50/1
ICE1405*A3	R-404a	60	60 - 35	200 - 400	36	12 - 16	12.4	220-240/50/1
ICE1405*W3	R-404a	25	60 - 35	250	36	12 - 14	12.4	220-240/50/1
ICE1405*R3	R-404a	240	60 - 35	240 - 400	39	12 - 15	12.4	220-240/50/1
ICE1405*A4	R-404a	60	60 - 35	200 - 400	36	12 - 16	12.4	220-240/50/1
ICE1405*W4	R-404a	25	60 - 35	250	36	12 - 14	12.4	220-240/50/1
ICE1405*R4	R-404a	240	60 - 35	240 - 400	39	12 - 15	12.4	220-240/50/1
ICE1405*A5	R-404a	60	60 - 35	200 - 400	35	12 - 16	12.4	220-240/50/1
ICE1405*W5	R-404a	25	60 - 35	250	35	12 - 14	12.4	220-240/50/1
ICE1405*R5	R-404a	240	60 - 35	240 - 400	35	12 - 15	12.4	220-240/50/1

Compressor Troubleshooting Guide

9. Head pressure too high	**a**. Refrigerant overcharge	**a**. Weigh in the correct charge
	b. Air in the refrigeration system	**b**. Make sure refrigeration system does not have any leaks and that you are able to achieve a good evacuation
	c. Dirty condenser	**c**. Clean the condenser
	d. Defective or dirty condenser fan	**d**. Clean or replace motor or blade
	e. Insufficient or restricted water flow (water cooled)	**e**. Make sure of adequate water supply
	f. Excessive air temperature entering condenser	**f**. Cool the ambient around the machine
	g. Restriction in discharge line	**g**. Look for restriction and remove it.
10. Head pressure too low	**a**. Low ambient temperature	**a**. Warm ambient air
	b. Low refrigerant charge	**b**. Weigh in correct amount of refrigerant
	c. Internal damage to compressor	**c**. Check compressor amp draw
	d. Head pressure control may be bypassing	**d**. Replace head pressure control valve
11. Evaporator temperature too high	**a**. Low refrigerant charge	**a**. Weigh in correct amount of refrigerant
	b. Defective expansion valve	**b**. Check for correct superheat
	c. Restricted liquid line	**c**. Look for restriction and remove it.
	d. Inefficient compressor	**d**. Check compressor amp draw
	e. Hot gas valve open or leaking	**e**. Check hot gas valve for reason

Compressor Troubleshooting Guide

6. Start relay burns out	**a**. Low or high supply voltage	**a**. Check incoming voltage to make sure it is no more than 5% lower or 10% higher than machine rated voltage.
	b. Short cycling	**b**. Check for reason in compressor short cycles above.
	c. Improper mounting of the start relay	**c**. Make sure the relay has the correct orientation
	d. Incorrect run capacitor	**d**. Make sure of the correct MFD and voltage rating of the capacitor
	e. Incorrect relay	**e**. Use only OEM service parts
	f. Loose wire connections	**f**. Repair or replace connectors
7. Start capacitor burns out	**a**. Compressor short cycling	**a**. Check for reason in compressor short cycles above.
	b. relay contacts sticking	**b**. See contacts sticking on start relay above
	c. Incorrect capacitor	**c**. Make sure of the correct MFD and voltage rating of the capacitor
	d. Start windings staying in circuit too long	**d**. Check for correct voltage Check for excessive head pressure Check start relay
8. Run capacitor burns out	**a**. Excessive line voltage	**a**. Check incoming voltage to make sure it is no more than 5% lower or 10% higher than machine rated voltage.
	b. Capacitor voltage too low	**b**. Make sure of the correct MFD and voltage rating of the capacitor

Compressor Troubleshooting Guide

3. Compressor starts but trips on overload **(Continued)**	**e**. Excessive suction or discharge pressure	**e**. Check expansion valve for proper superheat Check hot gas valve for leakage System may be overcharged Condenser may be restricted Damaged compressor valves
	f. Internal mechanical damage	**f**. Check compressor amp draw
	g. defective overload	**g**. Make sure compressor has cooled then check for open overload
	h. Shorted or grounded motor windings	**h**. Ohm out the windings
4. Compressor short cycles	**a**. Control defective or improperly adjusted	**a**. Check bin control, pressure controls or contactor
	b. Shortage of refrigerant	**b**. make sure system is fully charged
	c. Discharge pressure too high	**c**. make sure condenser is clean
	d. Discharge valves leaking	**d**. Check compressor amp draw
5. Contacts sticking on start relay	**a**. Short cycling	**a**. Check for reason in compressor short cycles above
	b. No bleed resistor on start capacitor	**b**. Replace start capacitor

Compressor Troubleshooting Guide

1. Compressor hums but will not start	**a**. Improperly wired	**a**. Make sure wires are connected to the correct terminals
	b. Low line voltage	**b**. Make sure supply voltage is no less than 5% below machines rated voltage
	c. Defective start or run capacitor	**c**. Check capacitors
	e. Extreme head pressure	**e**. Let pressures equalize, check for reason for excessive head pressure
	f. Shorted or grounded motor windings	**f**. Ohm out the motor windings
	g. Internal compressor mechanical damage	**g**. Check compressor amp draw
2. Compressor will not run, does not try to start	**a**. power supply open	**a**. Check to make sure there is a power supply to the machine
	b. Compressor motor compressor open	**b**. Make sure the compressor has cooled
	c. Open control	**c**. Check bin control, high and low pressure controls
	d. Burned motor windings	**d**. Ohm out the windings
3. Compressor starts but trips on overload	**a**. Low line voltage	**a**. Check power supply, supply must not be more than 5% below rated voltage
	b. Improperly wired	**b**. Make sure wires are on the correct compressor terminals
	c. Defective run or start capacitor	**c**. Check capacitors
	d. Defective start relay	**d**. Check start relay

Compressor Burnout Procedure

Once a compressor burnout is has been determined the following procedure should be followed:

A. Recover the refrigerant charge from the machine.

B. Remove the compressor.

C. Inspect the hot gas valve for contaminants, if found, replace the hot gas valve and expansion valve.

D. Purge the system with nitrogen.
Note: Do Not Use Refrigerant to Purge the System

E. Install the new compressor and start components.

F. Install a new liquid line filter drier.
Note always cut filter out with refrigerant tubing cutter do not unsweat filter with a torch.

G. Install a suction line filter drier. The suction line filter should be purchased through local ACR wholesale house. IOM will reimburse for cost of suction line cleanout filter if warranty so please supply copy of invoice for suction cleanout filter.

H. Now pull a deep vacuum (200 to 500 microns static) on system.

I. Charge system with virgin refrigerant according to the amount indicated on ice machine data plate.

J. After 24 hours of actual run time recover refrigerant and remove suction cleanout filter and replace liquid line filter.

K. Again do not unsweat filters with torch. Use a refrigerant tubing cutter to remove filters.

L. Pull deep vacuum (200 to 500 microns static) on system once filter is changed.

M. Charge system with virgin refrigerant according to the amount indicated on ice machine data plate.

N. At this point the refrigeration system should be clean.

O. Leak check as required.

ICE-O-MATIC COMPRESSOR SPECIFICATIONS						
COMPRESSOR & COMPONENT PART USAGE						
COMPRESSOR	SUPPLIER	MODEL NUMBER	START CAPACITOR	RUN CAPACITOR	COMPRESSOR RELAY	OVERLOAD
9181084-03	DANFOSS	SC15GH	9181003-27	N/A	9181004-15	INTERNAL
9181085-01	COPELAND	RS64C2E-PAA-214	9181003-26	9181009-17	9181010-12	9181005-22
9161085-02	COPELAND	RS64C1E-PFA-214	9081003-26	9181009-17	9181010-12	INTERNAL
9181086-01	COPELAND	RS43C2E-IAA-214	9181003-17	N/A	9181010-14	9181005-12
9181086-02	COPELAND	RS43C2E-IAV-214	9181003-05	N/A	9181004-07	9181005-27
9181087-01	BRISTOL	M65B972BBCB	9181003-11	9181009-11	9181010-15	INTERNAL
9181087-02	BRISTOL	M65B972BBK	9181003-19	9181009-11	9181010-19	INTERNAL
9181088-01	COPELAND	RS64C1E-IAZ	9181003-08	N/A	9181004-04	9181005-26
9181089-01	COPELAND	RS97C1E-IAZ	9181003-08	9181009-16	9181010-04	9181005-25
9181090-01	COPELAND	CS14K6E-PFV-235	9181003-19	9181009-12	9181010-10	INTERNAL
9181090-02	COPELAND	CS14K6E-PFJ-235	9181003-07	9181009-12	9181010-12	INTERNAL
9181093-01	BRISTOL	M65B203BBCA	9181003-06	9181009-12	9181010-16	INTERNAL
9181094-01	COPELAND	CS18K6E-TF5-235	N/A	N/A	N/A	INTERNAL
9181094-02	COPELAND	CS20K6E-PFZ-235/275	9181003-34	9181009-20	9181010-04	INTERNAL
9181095-01	TECUMSEH	AEA2411ZXA	9181003-03	N/A	9181004-22	9181005-31
9181095-02	TECUMSEH	AEA2411ZXC	9181003-16	N/A	9181004-23	9181005-30
9181097-01	BRISTOL	M66A243BBCA	9181003-06	9181009-13	9181010-17	INTERNAL
9181097-02	BRISTOL	M66A243DBDA	N/A	N/A	N/A	INTERNAL
9181098-01	TECUMSEH	AEA2380ZXA	9181003-38	N/A	9181004-25	9181005-34
9181098-02	TECUMSEH	AEA2380ZXC	9181003-37	N/A	9181004-23	9181005-35
9181100-01	BRISTOL	M66A323BBKA	9181003-30	9181009-13	9181010-17	INTERNAL
9181102-01	BRISTOL	M65B183BBKA	9181003-31	9181009-04	9181010-20	INTERNAL
9181104-01	BRISTOL	M65B133BBCB	9181003-31	9181009-19	9181010-21	INTERNAL
9181106-01	COPELAND	CS10K6E-PFV-235	9181003-07	9181009-16	9181010-12	INTERNAL
9181107-01	COPELAND	CS12K6E-PFV-235	9181003-07	9181009-16	9181010-12	INTERNAL
9181107-02	COPELAND	CS12K6E-PFJ-235	9181003-32	9181009-16	9181010-04	INTERNAL
9181107-03	COPELAND	CS12K6E-TF5	N/A	N/A	N/A	INTERNAL
9181108-01	COPELAND	CS20K6E-PFV-235	9181003-21	9181009-20	9181010-10	INTERNAL
9181108-02	COPELAND	CS20K6E-TF5-236	N/A	N/A	N/A	INTERNAL
9181110-01	COPELAND	CS27K3E-PFV-236	9181003-21	9181009-13	9181010-11	INTERNAL
9181110-02	COPELAND	CS27K3E-TF5-235	N/A	N/A	N/A	INTERNAL
9181110-03	COPELAND	CS27K3E-PFZ-236	9181003-30	9181009-20	9181010-11	INTERNAL
9181111-02	COPELAND	CS18K6E-TF5-235	N/A	N/A	N/A	INTERNAL
9181112-01	COPELAND	RS86C1E-PFV-214	9181003-26	9181009-11	9181010-12	INTERNAL
9181112-02	COPELAND	RS86C1E-PFJ-214	9181003-33	9181009-11	9181010-10	INTERNAL
9181113-01	TECUMSEH	AEA9422ZXA	9181003-35	N/A	9181004-22	9181005-29
9181114-01	COPELAND	AS32C1E-CAA-202	9181003-26	9181009-21	9181010-24	9181005-32
9181115-01	COPELAND	ASB14C3E-IAA-301	9181003-43	N/A	9181004-24	9181005-42
9181115-02	COPELAND	ASE24C3E-IAA-301	9181003-43	N/A	9181004-24	9181005-38
9181115-03	COPELAND	ASE24C3E-IAZ-301	9181003-29	N/A	9181004-20	9181005-40
9181115-04	COPELAND	ASE24C3E-IAV-301	9181003-41	N/A	9181004-28	9181005-41
9181116-01	COPELAND	RS55C2E-CAZ-214	9181003-04	9181009-09	9181010-04	9181005-36
9181117-01	COPELAND	ASE32C3E-CAA-202	9181003-26	9181009-21	9181010-24	9181005-38
9181121-01	TECUMSEH	AKA9438ZXA	9181003-39		9181004-27	9181005-37
9181122-01	TECUMSEH	AKA9438ZXC	9181003-40	9181009-08	9181010-26	9181005-39
9181123-01	COPELAND	CS27K6E-PFV-236	9181003-21	9181009-21	9181010-11	INTERNAL

ICE-O-MATIC COMPRESSOR SPECIFICATIONS						
COMPRESSOR & COMPONENT PART USAGE						
COMPRESSOR	SUPPLIER	MODEL NUMBER	START CAPACITOR	RUN CAPACITOR	COMPRESSOR RELAY	OVERLOAD
9181123-02	COPELAND	CS27K6E-TF5-235	N/A	N/A	N/A	INTERNAL
9181123-03	COPELAND	CS27K6E-PFZ-236	9181003-21	9181009-21	9181010-12	INTERNAL
9181124-01	TECUMSEH	AKA9455ZXA	9181003-40	9181009-11	9181010-28	9181005-43
9181125-01	COPELAND	CS08KQE-PFV-255	9181003-19	9181009-16	9181010-10	INTERNAL
9181126-01	TECUMSEH	AKA9438ZXD	9181003-41	9181009-08	9181010-29	9181005-44
9181127-01	TECUMSEH	AKA9451ZXC	9181003-41	9181009-08	9181010-30	9181005-44
9181128-01	COPELAND	CS08KQE-PFZ-255	9181003-44	9181009-17	9181010-10	INTERNAL
9181129-01	COPELAND	CS24K6E-PFV-236	9181003-21	9181009-13	9181010-11	INTERNAL
9181129-02	COPELAND	CS24K6E-TF5-236	N/A	N/A	N/A	INTERNAL
9181130-01	COPELAND	RS97CIE-CAZ-213	9181003-08	9181009-16	9181010-27	1011380-139
9181131-01	TECUMSEH	AKA94272XA	9181003-49	N/A	9181004-29	1011380-233
9181134-01	COPELAND	RS70CIE-PFV-213	9181003-20	9181009-11	9181010-12	INTERNAL
9181135-11	COPELAND	RS55CIE-PAA-213	9181003-47	9181009-11	9181010-31	1011380-125
9181135-12	COPELAND	RS55CIE-PAZ-213	9181003-48	9181009-09	9181010-04	1011380-130
9181137-11	COPELAND	RST55C1E-CAA	9181003-50	9181009-25	9181010-14	9181005-45
9181138-11	COPELAND	RST55C1E-CAB	9181003-51	9181009-26	9181010-32	9181005-46
9181139-11	COPELAND	CS10K6E-PFV-255	9181003-07	9181009-16	9181010-12	INTERNAL
9181140-11	COPELAND	CS12K6E-PFV-255	9181003-07	9181009-16	9181010-12	INTERNAL
9181140-12	COPELAND	CS126K6E-PFJ-255	9181003-32	9181009-17	9181010-04	INTERNAL
9181140-13	COPELAND	CS12K6E-TF5-255	N/A	N/A	N/A	INTERNAL
9181141-11	COPELAND	CS14K6E-PFV-255	9181003-19	9181009-12	9181010-10	INTERNAL
9181141-12	COPELAND	CS14K6E-PFJ-255	9181003-07	9181009-12	9181010-12	INTERNAL
9181142-11	COPELAND	CS18K6E-PFV-255	9181003-19	9181009-12	9181010-10	INTERNAL
9181142-12	COPELAND	CS18K6E-TF5-255	N/A	N/A	N/A	INTERNAL
9181143-11	COPELAND	CS20K6E-PFV-255	9181003-21	9181009-20	9181010-10	INTERNAL
9181143-12	COPELAND	CS20K6E-PFZ-255	9181003-34	9181009-20	9181010-04	INTERNAL
9181143-13	COPELAND	CS20K6E-TF5-256	N/A	N/A	N/A	INTERNAL
9181144-11	COPELAND	CS24K6E-PFV-256	9181003-21	9181009-13	9181010-11	INTERNAL
9181144-12	COPELAND	CS24K6E-TF5-256	N/A	N/A	N/A	INTERNAL
9181145-11	COPELAND	RST70C1E-PFV	9181003-53	9181009-19	9181010-27	INTERNAL
9181147-11	COPELAND	RST80C1E-PFZ	9181003-54	9181009-17	9181010-01	INTERNAL
9181148-11	COPELAND	ASE14C4E-IAA	9181003-53	N/A	N/A	9181005-45

ICE-O-MATIC START CAPACITOR SPECIFICATIONS

CAPACITOR PN	SUPPLIER	PART #	MFD	MIN. VOLTS
9181003-01	COPELAND	014-0008-71	189-227	220
9181003-02	COPELAND	014-0008-70	43-52	330
9181003-03	COPELAND	014-0008-79	270-324	165
9181003-04	COPELAND	014-0008-72	64-77	250
9181003-05	COPELAND	014-0008-64	43-52	220
9181003-06	COPELAND	014-0008-50	161-193	220
9181003-07	COPELAND	014-0008-51	145-174	220
9181003-08	COPELAND	014-0008-61	88-106	220
9181003-09	COPELAND	014-0032-00	233-280	110
9181003-10	COPELAND	014-0006-08	216-259	220
9181003-11	TECUMSEH	85PS250C19	88-108	250
9181003-13	TECUMSEH	85577-1	135-155	330
9181003-14	COPELAND	014-0008-69	270-324	110
9181003-15	TECUMSEH	85PS110A80	270-324	110
9181003-16	TECUMSEH	85710-1	72-88	220
9181003-17	COPELAND	014-0008-57	243-292	110
9181003-18	TECUMSEH	855S220B95	88-106/220	220
9181003-19	COPELAND	014-0036-04	145-174	250
9181003-20	COPELAND	014-0008-66	108-130	220
9181003-21	COPELAND	014-0006-03	189-227	330
9181003-22	DANFOSS	117-5030		
9181003-23	COPELAND	014-0038-01	145-175	110
9181003-24	DANFOSS	117U5023		
9181003-26	COPELAND	014-0008-74	72-86	330
9181003-27	DANFOSS	117U5017		
9181003-28	COPELAND	014-0038-02	53-64	250
9181003-29	COPELAND	014-0038-06	59	330
9181003-30	COPELAND	014-0006-10	270-324	330
9181003-31	COPELAND		161-193	250
9181003-32	COPELAND	014-0036-02	130-156	250
9181003-33	COPELAND	014-0036-00	53-64	330
9181003-34	COPELAND	014-0006-09	219-259	330
9181003-35	TECUMSEH	85PS165C27	270-324	165
9181003-36	COPELAND	014-0038-09	189-227	250
9181003-37	TECUMSEH	85PS220D04	88-108	220
9181003-38	TECUMSEH	85PS110C76	243-292	110
9181003-39	TECUMSEH	85PS125D59	378-455	125
9181003-40	TECUMSEH	85PS250C30	72-88	250
9181003-41	COPELAND	014-0038-11	72-88	330
9181003-42	COPELAND	014-0038-10	145-174	250
9181003-43	COPELAND	014-0038-00	145-174	165
9181003-44	TECUMSEH	85PS330D17	145-175	330
9181003-45	TECUMSEH	85685	72-88	330
9181003-46	TECUMSEH	85PS165C27	270-324	165
9181003-47	COPELAND	014-0008-48	124-149	220
9181003-48	COPELAND	014-0008-72	61-72	250
9181003-49	TECUMSEH	85PS165C97	161-193	165
9181003-50	COPELAND	014-0061-32	243-292	165
9181003-51	COPELAND	014-0061-26	130-156	250
9181003-52	COPELAND	014-0061-29	108-130	330
9181003-53	COPELAND	014-0053-26	145-175	250
9181003-54	COPELAND	014-0061-27	88-106	330

ICE-O-MATIC CURRENT RELAY SPECIFICATIONS

RELAY PART #	SUPPLIER	SUPPLIER PART #	PICK UP AMPS	DROP OUT AMPS
9181004-01	COPELAND	040-0088-00	28.9	23.7
9181004-02	COPELAND	040-0088-02	17.4	14.3
9181004-03	COPELAND TEXAS INT.	040-0088-04 6409-26-935	33.6	27.8
9181004-04	COPELAND	040-0088-05	21.8	17.9
9181004-05	COPELAND	040-0090-06	24.75	20.45
9181004-06	COPELAND	040-0090-05	10.4	8.6
9181004-07	COPELAND	040-0088-03	14.9	12.6
9181004-08	DANFOSS	117U6012	13.7	11.2
9181004-09	DANFOSS	117U6003		
9181004-10	TECUMSEH	82473		
9181004-11	TECUMSEH	82927		
9181004-12	TECUMSEH	820RR12B74		
9181004-13	TECUMSEH	82476		
9181004-14	DANFOSS	117U6010		
9181004-15	DANFOSS	117U6005		
9181004-16	DANFOSS	117-7374		
9181004-17	COPELAND	040-C411-66		
9181004-18	DANFOSS	117U6020		
9181004-19	DANFOSS	117U6019		
9181004-20	COPELAND	040-C411-49		
9181004-21	COPELAND	040-C411-47		
9181004-22	TECUMSEH	820RR12E72		
9181004-23	TECUMSEH	82O0EMBJ49		
9181004-24	COPELAND TEXAS INT.	040-C411-82 9660-041-182		
9181004-25	TECUMSEH	820RR12E82		
9181004-26	DANFOSS	117U6005		
9181004-27	TECUMSEH	82498-1		
9181004-28	COPELAND	040-C411-45		
9181004-29	TECUMSEH	8200EMBJ97		
9181004-30	COPELAND	040-0163-13	13.2	11.1

ICE-O-MATIC OVERLOAD SPECIFICATIONS

OVERLOAD PART #	SUPPLIER	SUPPLIER PART #
9181005-01	COPELAND	011-0127-34
9181005-02	COPELAND	071-0127-22
9181005-03	COPELAND	071-0127-06
9181005-04	COPELAND	071-0329-04
9181005-05	COPELAND	071-0329-13
9181005-06	COPELAND	071-0127-18
9181005-08	COPELAND	071-0127-28
9181005-09	COPELAND	071-0127-13
9181005-10	COPELAND	071-0127-10
9181005-11	COPELAND	071-0329-16
9181005-12	COPELAND	071-0329-15
9181005-12	TEXAS INSTRUMENTS	MRA6990-126
9181005-13	COPELAND	071-0369-20
9181005-14	COPELAND	0714-0329-18
9181005-15	TECUMSEH	8300MRTD88
9181005-16	TECUMSEH	8300MSPD91
9181005-17	TECUMSEH	8300MRPD95
9181005-18	TECUMSEH	P83613
9181005-20	COPELAND	071-0127-19
9181005-21	COPELAND	071-C100-28
9181005-22	COPELAND	071-0127-43
9181005-22	TEXAS INSTRUMENTS	CRA4759-138
9181005-23	COPELAND	071-C100-07
9181005-24	COPELAND	071-C100-37
9181005-25	COPELAND	071-0127-37
9181005-26	COPELAND	071-0329-27
9181005-27	COPELAND	071-0329-11
9181005-28	COPELAND	071-0421-21
9181005-29	TECUMSEH	8300MRTN28
9181005-30	TECUMSEH	8300MRAL57
9181005-31	TECUMSEH	8300MRTL13
9181005-32	COPELAND	071-C100-51
9181005-32	TEXAS INSTRUMENTS	MRT00JJH-3090
9181005-33	COPELAND	071-C100-54
9181005-33	TEXAS INSTRUMENTS	MRT18AJN-34
9181005-34	TECUMSEH	8300MRPH43
9181005-35	TECUMSEH	8300MRPN43
9181005-36	COPELAND	071-0527-06
9181005-37	TECUMSEH	8300CRAN37
9181005-38	COPELAND	071-0554-30
9181005-38	TEXAS INSTRUMENTS	MRA38110-3262
9181005-39	TECUMSEH	8300MRAN52
9181005-39	TEXAS INSTRUMENTS	MRA5727-114
9181005-40	COPELAND	071-0554-13
9181005-40	TEXAS INSTRUMENTS	MRP36AMK-3261
9181005-41	COPELAND	071-0554-40
9181005-41	TEXAS INSTRUMENTS	MRT26ALK-3261
9181005-42	EMERSON	071-0561-26
9181005-42	ELECTRICA	T0538/J5
9181005-43	TEXAS INSTRUMENTS	MRA4732-113
9181005-43	TECUMSEH	8300MRAK30
9181005-44	TEXAS INSTRUMENTS	MRA2715-114
9181005-44	TECUMSEH	8300MRAP06
9181005-45	ELECTRICA	10750/J5
9181005-46	COPELAND	071-0561-24

ICE-O-MATIC RUN CAPACITOR SPECIFICATIONS

CAPACITOR PN	SUPPLIER	SUPPLIER P/N	MFD.	MIN. VOLTS
9181009-01	COPELAND	014-0001-04	15	370
	ASC	X397S-15-10		
	C.S.C.I.	325P156H37A36N4X		
9181009-02	COPELAND	014-0002-09	25	370
	C.S.C.I.	325P256H37C25N4X		
9181009-03	COPELAND	014-0002-02	20	370
	C.S.C.I.	325P206H37C25N4X		
9181009-08	GE	97F5050	15	370
	GE	97F8061		
	ASC	X386S-15-10		
	C.S.C.I.	325P156H37M25N3X		
9181009-09	GE	97F9037	15	440
	GE	97F9626		
	ASC	X386S-15-10		
	C.S.C.I.	325P156H44M25N3X		
9181009-11	GE	97F9006	25	370
	GE	97F9606		
	ASC	X386S-25-10		
	C.S.C.I.	325P256H37M30N3X		
9181009-12	GE	97F9007	35	370
	GE	97F9611		
	ASC	X386S-35-10		
	C.S.C.I.	325P356H37M36N3X		
	COPELAND	014-0037-28		
9181009-13	GE	97F5116	40	440
	GE	97F9642		
	ASC	X386S-40-10		
	C.S.C.I.	325P406H44N36N4X		
9181009-14	GE	97F9041	35	440
	GE	97F9639		
	ASC	X386S-35-10		
	C.S.C.I.	325P356H44N36N4X		
9181009-16	COPELAND	014-0037-10	30	370
	GE	97F8065		
	ASC	X386S-30-10		
	C.S.C.I.	325P306H37M30N3X		
9181009-17	COPELAND	014-0037-16	30	440
	AEROVOX	Z24P443M		
	ASC	X386S-30-10		
	C.S.C.I.	325P306H44M36N3X		
9181009-18	COPELAND	014-0037-36	45	370
	C.S.C.I.	325P456A37N36N4X		
9181009-19	C.S.C.I.	325P256H44M36N4X	25	440
9181009-20	COPELAND	014-0037-12	40	370
9181009-21	COPELAND	014-0037-14	20	440
	C.S.C.I.	325P206H44M30N3X		
9181009-22	COPELAND	014-0037-37	60	370
9181009-23	COPELAND	014-0037-20	50	440
9181009-24	TECUMSEH	85PR440E65	45	440
9181009-25	COPELAND	014-0064-13	35	440
9181009-26	COPELAND	014-0064-33	18	440

ICE-O-MATIC POTENTIAL RELAY SPECIFICATIONS

RELAY PART#	SUPPLIER	SUPPLIER PART #	PICK-UP VOLTS	DROP-OUT VOLTS	Hz
9181010-01	COPELAND GE R.B.M.	040-0001-78 3ARR3CT10AS5 F128146-1653S	190-200	60-124	50
9181010-02	GE R.B.M.	3ARR3CT3S5 128146-1643S	190-200	55-115	60
9181010-03	COPELAND GE R.B.M.	040-0001-74 3ARR3CT6C5 128306-1663C	300-320	75-160	60
9181010-04	COPELAND GE R.B.M.	040-0001-54 3ARR3CT10V5 128146-1653V	240-260	75-150	60
9181010-05	COPELAND GE R.B.M.	040-0001-72 3ARR3CT6AB5 F128306-1653B	280-300	60-140	50
9181010-08	HUPP	1456-790			
9181010-09	COPELAND GE R.B.M.	040-0001-63 3ARR3CT10C5 128146-1653C	300-320	60-140	50-60
9181010-10	COPELAND GE R.B.M.	040-0001-55 3ARR3CT10S5 128306-1653S	190-200	60-130	60
9181010-11	COPELAND GE R.B.M.	040-0001-64 3ARR3CT6A5 128146-1663A	260-280	75-150	60
9181010-12	COPELAND GE R.B.M.	040-0001-60 3ARR3CT24S5 128306-1643S	190-200	55-115	60
9181010-13	BRISTOL GE	650926 3ARR3W4AA3	239-268	60-135	50
9181010-14	R.B.M. GE COPELAND	128306-1633MK 3ARR3CT5M5 040-0001-62	150-160	35-90	60
9181010-15	PRODUCTS UNLIMITED	38-D144C3161			
9181010-16	GE	3ARR3CT3U3			
9181010-17	GE	3ARR3CT4A5			
9181010-18	GE	3ARR3CT10AB			
9181010-19	GE	3ARR3CT10AS3			
9181010-20	GE	3ARR3W10AT3			
9181010-21	GE	3ARR3CT10A3			
9181010-23	COPELAND	040-0001-60	100-20	55-115	60
9181010-24	COPELAND GE	040-0001-88 3ARR3CT6U5			
9181010-25	GE TECUMSEH	3ARR3B25S3 82467	190-210	40-130	60
9181010-26	GE TECUMSEH	3ARR3K5AN4 820ARR3E39	160-170	35-77	50
9181010-27	COPELAND GE	040-0166-27 3ARR3KC6V5	240-260	60-121	60
9181010-28	TECUMSEH GE	8200ARR3H09 3ARR3K3TP4	170-180	70-100	60
9181010-29	TECUMSEH GE	8200ARR3K63 3ARR3K3A4	260-280	40-90	60
9181010-30	TECUMSEH GE	8200ARR3H12 3ARR3K5AN4	160-170	35-77	50
9181010-32	COPELAND GE ELETRICA	040-0166-26 3ARR3T10AB5 RVA3N6D767	260-289	50-110	50

1. What initiates defrost on Ice-O-Matic ICE Series cubers.
2. What terminates defrost on Ice-O-Matic ICE Series cubers.
3. What is bridge thickness?
4. What is the purpose of the Head Master/Mixing Valve?
5. Why do ice machines purge in defrost.
6. Why do you have to use Nickel Safe ice machine cleaner?
7. How do you set the low pressure control?
8. How do you determine the low pressure control set point?
9. What is a cause of high head pressure?
10. What is a cause of low head pressure?
11. What can cause high suction pressure?
12. What can cause low suction pressure?
13. What is the Warranty on the ICE Series cubers?
14. How do you determine if a machine is still in warranty?
15. How do you determine a defective evaporator?
16. What adjustments are covered under warranty?
17. Is cleaning of the ice machine covered under warranty?
18. What is the purpose of the curtain switch?
19. How do you adjust the curtain switch?
20. What is the purpose of the thermostatic bin control?
21. What is a top air discharge machine?
22. How much clearance should a top air discharge require?
23. Define a Half cube and Full cube.
24. How do you adjust the bridge thickness?
25. What is the purpose of the High Temperature Safety Control?
26. What is the purpose of the Fan Cycle Control?
27. True or False, If the Low Pressure Control is closed and you have no defrost you have an electrical issue.
28. Can you make colored cubes by adding food coloring to the water trough?
29. True or False, The ICE Series machine are a continual water fill system.
30. How do you perform a production check on an ICE Series machine?

Ice-O-Matic
Ice. Pure and Simple™

Date_____ Zip Code_____

Thank You for attending the Ice-O-Matic Service Seminar. We hope that you found it valuable. We would appreciate it very much if you would take a few minutes to complete the survey below. Thanks for your participation.

How would you rate the seminar in terms of the following: (circle one)

	Poor			Excellent	
Food	1	2	3	4	5
Facility	1	2	3	4	5
Visual Aids	1	2	3	4	5
Handouts	1	2	3	4	5
Overall	1	2	3	4	5

How difficult was the material covered in the seminar?

1	2	3	4	5
Much Too Easy	Too Easy	About Right	Too Difficult	Much Too Difficult

Was the information presented in a way that was easy to follow?

1	2	3	4	5
Very Easy to Follow	Easy to Follow	Borderline	Difficult to Follow	Very Difficult to Follow

How would you describe the length of the seminar?

1	2	3	4	5
Much too Short	Too Short	About Right	Too Long	Much Too Long

Are you a part of the IOM Factory Authorized Service Team? No Yes

How many years of experience do you have servicing ice machines? _____

What should have been covered that wasn't? _____

_____

What do you suggest we do to improve the seminar? _____

_____

_____

Comments: _____

_____

_____

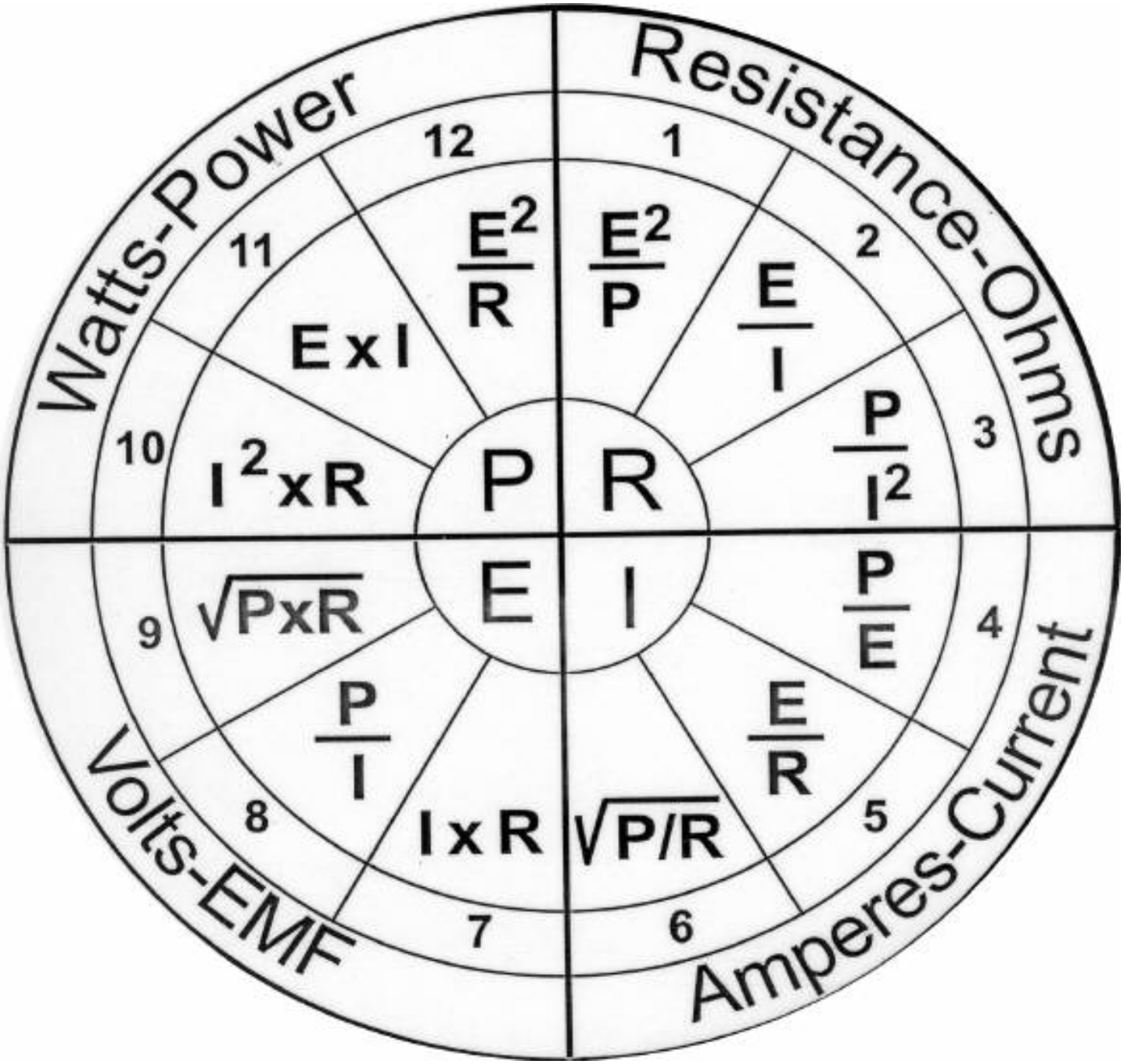
Watts-Power
Resistance-Ohms
Volts-EMF
Amperes-Current
P
R
E
I
1
2
3
4
5
6
7
8
9
10
11
12
E²/P
E/I
P/I²
P/E
E/R
√P/R
I x R
P/I
√PxR
I²xR
E x I
E²/R

Pressure-Temperature Chart

	Temperature °F	
PSIG	R134a	R404A
5*	-30	-65
4*	-29	-63
3*	-27	-62
2*	-25	-60
1*	-24	-59
0	-22	-57
1	-19	-54
2	-16	-52
3	-13	-49
4	-11	-47
5	-9	-44
6	-6	-42
7	-4	-40
8	-2	-38
9	0	-36
10	2	-34
11	4	-32
12	6	-31
13	8	-29
14	9	-27
15	11	-26
16	13	-24
17	14	-23
18	16	-21
19	17	-20
20	19	-18
21	20	-17
22	22	-16
23	23	-14
24	24	-13
25	26	-12
26	27	-10
27	28	-9
28	29	-8
29	31	-7

	Temperature °F	
PSIG	R134a	R404A
30	32	-6
31	33	-5
32	34	-4
33	35	-2
34	36	-1
35	37	0
36	38	1
37	40	2
38	41	3
39	42	4
40	43	5
42	45	6
44	46	8
46	48	10
48	50	12
50	52	14
52	54	15
54	55	17
56	57	18
58	59	20
60	60	21
62	62	23
64	63	24
66	65	26
68	66	27
70	68	29
72	69	30
74	70	31
76	72	33
78	73	34
80	74	35
85	78	38
90	81	41
95	83	44
100	86	47

	Temperature °F	
PSIG	R134a	R404A
105	89	49
110	92	52
115	94	54
120	97	56
125	99	58
130	102	61
135	104	63
140	106	65
145	108	67
150	111	69
155	113	71
160	115	73
165	117	75
170	119	77
175	121	79
180	122	81
185	124	83
190	126	84
195	128	86
200	130	88
205	131	89
210	133	91
220	136	94
230	140	97
240	143	100
250	146	103
260	149	106
275	153	110
290	157	114
305	161	118
320	164	121
335	168	125
350	172	128
365	175	132

* Inches mercury below one atmosphere