Scotsman
Ice Systems

UC0918GAX-1A

SPARE PARTS LIST

REV. 4/2025

Scotsman Ice Systems

Contents

UNIT PANELS - DRAWING.....1

UNIT PANELS - PARTS LIST.....2

REFRIGERANT SYSTEM - DRAWING.....3

REFRIGERANT SYSTEM - PARTS LIST.....4

WATER SYSTEM - DRAWING.....5

WATER SYSTEM - PARTS LIST.....6

CONTROL BOX - DRAWING.....7

CONTROL BOX - PARTS LIST.....8

UNIT PANELS

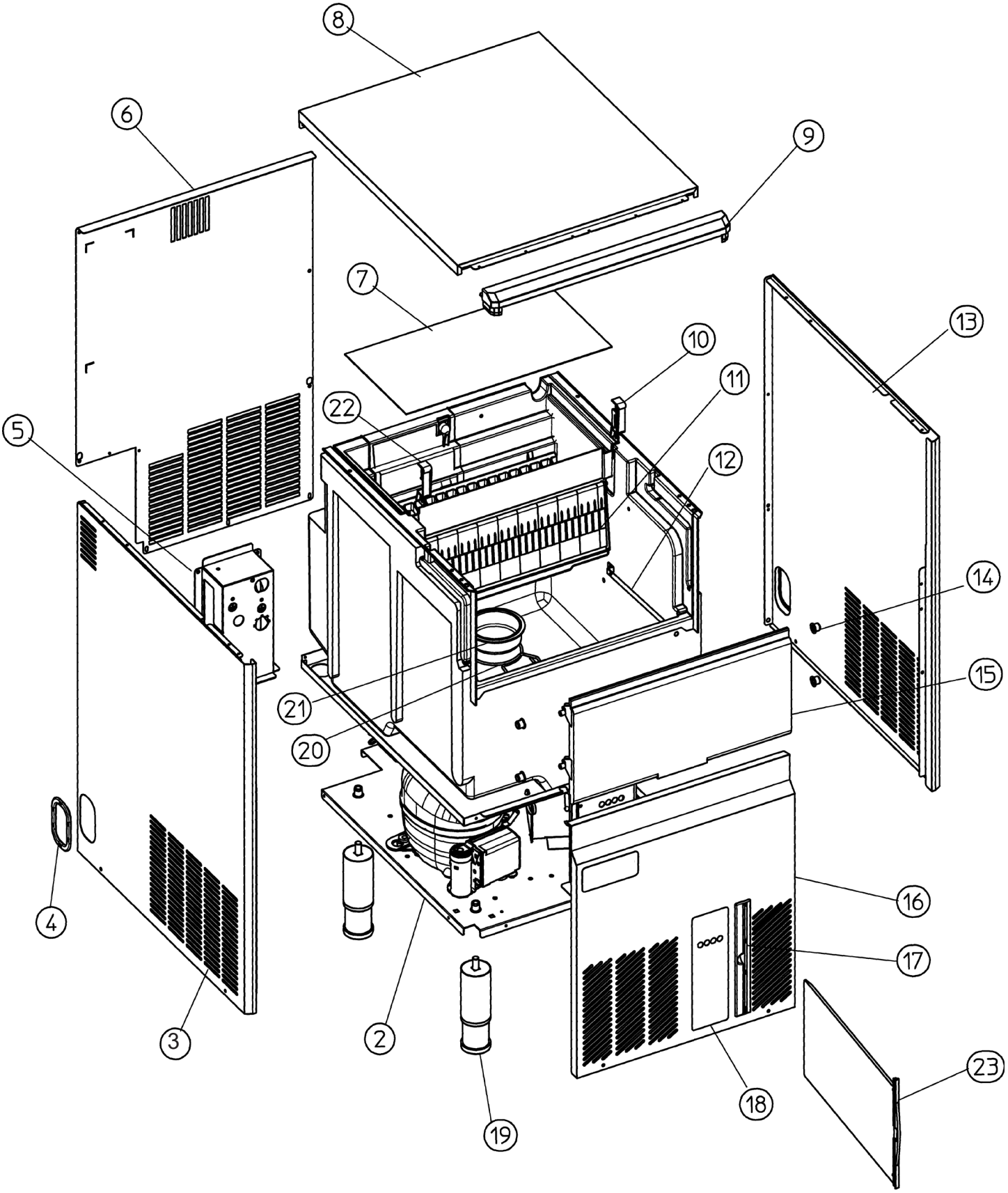

UNIT PANELS

Pos	Code	Description
2	F702742-01	BASE
3	F722566-00	LEFT SIDE PANEL
4	F661070-00	PLASTIC PROTECTION
5	F702705-00	WATER HOOK UP PANEL
6	F702666-00	REAR PANEL
7	F742033-05	EVAPORATOR COVER
8	F722984-00R	TOP PANEL
10	F660388-00	CURTAIN BRACKET (LEFT)
11	F784457-14R	CURTAIN ASSY
12	F620565-01	BIN LEVEL CONTROL
13	F722567-00	RIGHT SIDE PANEL
14	F660286-00	BUSHING
15	F661220-10	BIN DOOR
16	F726148-00	FRONT PANEL
17	F660804-03	AIR FILTER SEAT
18	F651880-00	LABEL
19	F651469-02	LEG
20	F460047-00	SPRING
21	F660741-00	PLASTIC PLUG
22	F660388-01	CURTAIN BRACKET (RIGHT)
23	F660805-04	AIR FILTER

REFRIGERANT SYSTEM

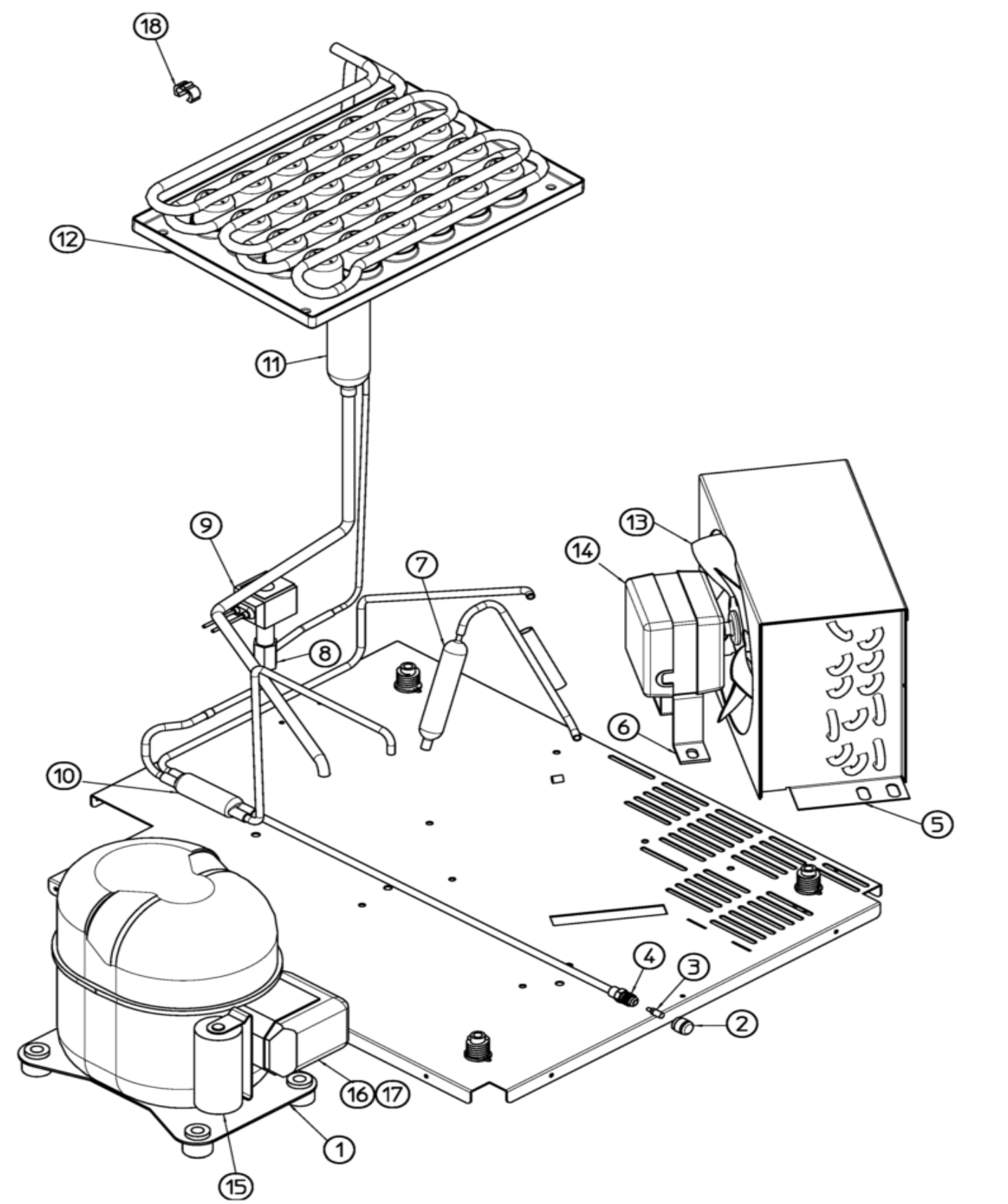

REFRIGERANT SYSTEM

Pos	Code	Description
1	F670109-08	COMPRESSOR
2	F650106-00	CAP
3	F670012-00	VALVE CORE
4	F650109-00	VALVE BODY
5	F620545-00	CONDENSER, AIR
6	F620419-69	BRACKET, MOTOR
7	F630003-11	FILTER
8	F620306-27	HOT GAS VALVE BODY
9	F620306-49	COIL
10	F630137-00	MECHANICAL FILTER
11	F784444-55	ACCUMULATOR ASSY
12	F784477-11	EVAPORATOR ASSY
13	F620419-39	BLADE
14	F620419-03	FAN MOTOR ATEX
15	FCUB102263-00	RUN CAPACITOR
15	FCUB103534-00	START CAPACITOR
16	FCUB407615-00	RELAY
17	FCUB103533-00	PROTECTOR
18	F660386-00	SPRING

WATER SYSTEM

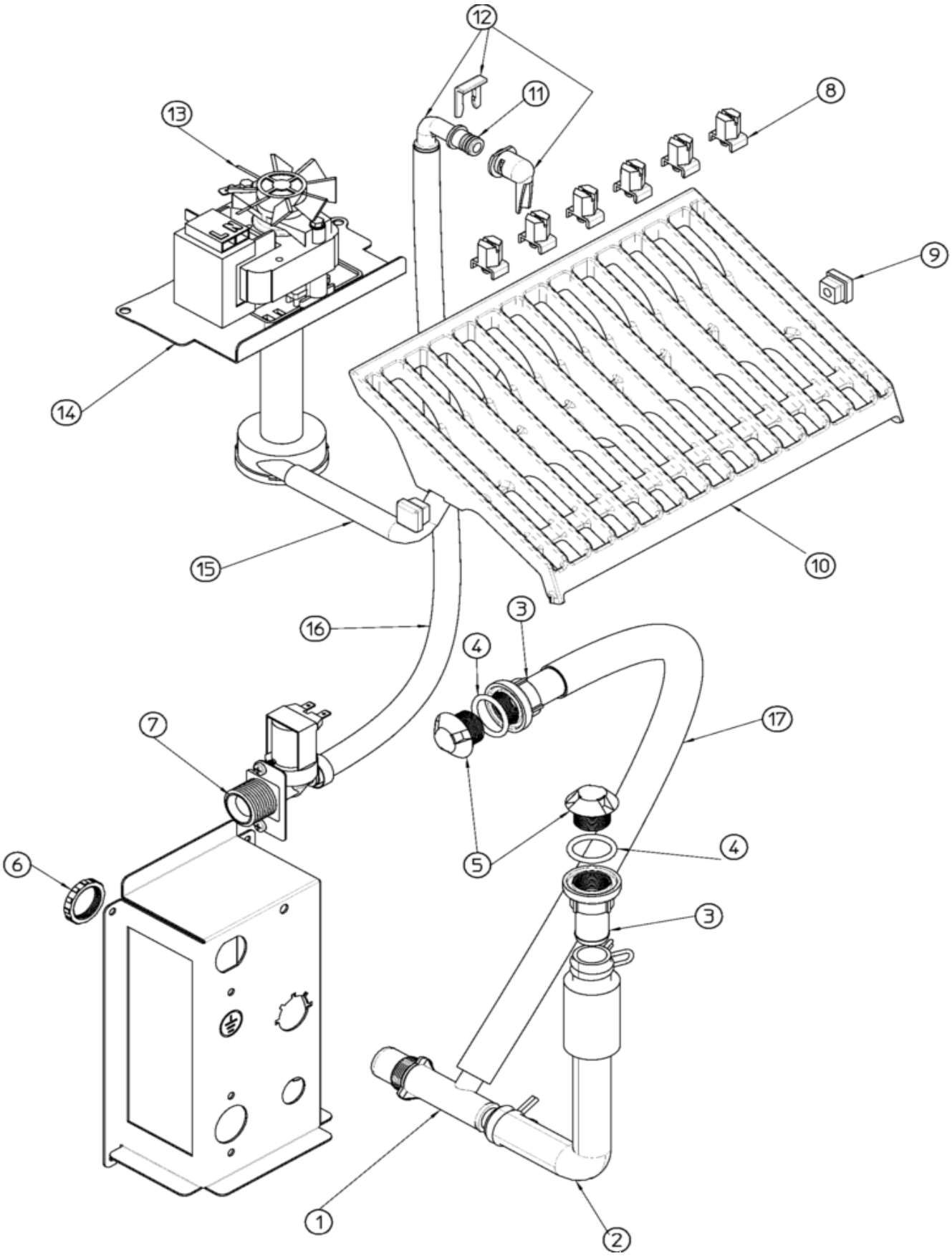

WATER SYSTEM

Pos	Code	Description
1	F660993-00	FITTING
2	F610148-10	TUBE
3	F660219-02	DRAIN FITTING
4	F640134-00	O RING
5	F660211-01	DRAIN FILTER
6	F660535-00	PLASTIC NUT
7	F650105-59	WATER INLET VALVE
8	F660558-00R	SPRAY NOZZLE (10 PCS)
9	F660557-00	SPRAY CUP
10	F661082-01	SPRAY BAR & CHUTE
11	F640041-31	O RING OR 2031 (WRAS-FDA)
12	F793172-00R	WATER INLET ASSY
13	F620433-12	WATER PUMP 115V/60HZ/1PH (30W)
14	F724485-00	METAL BRACKET
15	F610204-01	WATER TUBE
16	F281900-01	TUBE 16 X 10
17	F610204-00	TUBE

CONTROL BOX

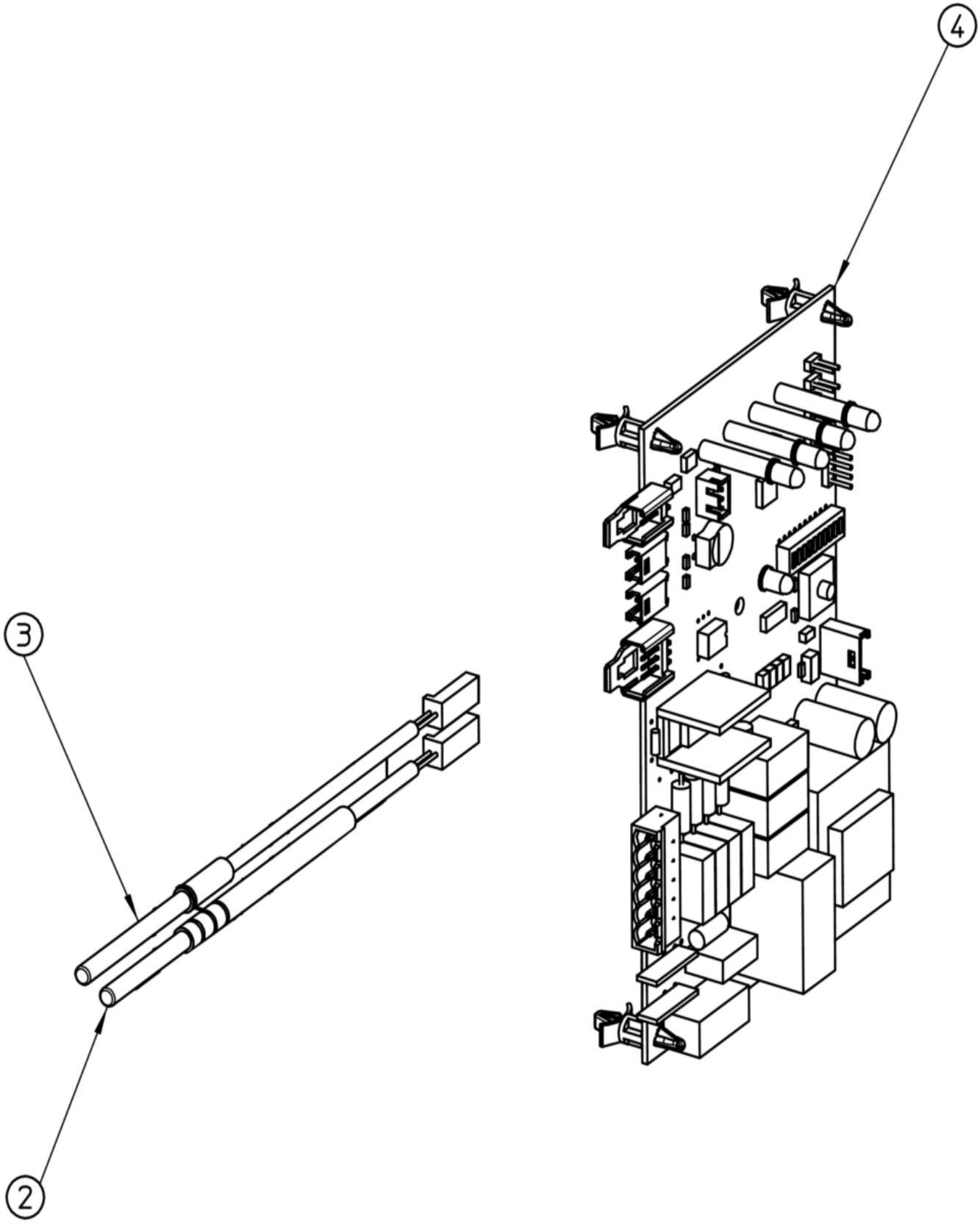

CONTROL BOX

Pos	Code	Description
2	F620519-01	EVAPORATOR SENSOR
3	F620519-04	CONDENSER SENSOR
4	F620620-02	POWER PCB ATEX