www.BakeMax.com

BakeMax BMPME30
30Qt. 3 Speed
Planetary Mixer
Operations Manual

Questions? OEM Parts? Contact Us:

Toll Free: 1-800-565-2253

Email: Info@BakeMax.com

www.BakeMax.com

WARNING: PLEASE READ AND FOLLOW THE INSRUCTIONS BELOW BEFORE OPERATING PRODUCT

- When using the machine, please confirm that you have read all the instructions within this manual.
- Beware of any child/children or any other persons who are near the machine before operating.
- Do not put hand near moving parts.
- Remove all obstacles, which may interfere with machine functions.
- Keep work area clean and clear of clutter.
- Do not sit or stand on machine
- Do not wear loose cloth or jewellery when operating machine as it may get caught in moving parts and cause injury
- When the machine is abnormal or broken, you should stop using and check it or have it checked by a professional.
- Disconnect from power source before performing maintenance on the machine.
- When machine is not in use, please clean and store properly.
- Do not place any electrical parts or plug/cord in water.
- The cord should be away from the heat.
- Don't hang out the cord on the desk or cabinet.
- Machine may have sharp or pointed edges, use caution when cleaning.
- This machine should only be operated by personnel who can read, understand and respect warnings and instructions regarding this machine and the manual.
- Keep this manual in a safe place for further and regular reference and ordering parts.
- Please write model serial and date of purchase of your machine in the space provided in case you will need to order parts in the future.
- Always work by security code of your country, state, province, city or committee of your work place.

Introduction

The BMPME20 & BMPME30 Mixers are advanced machines which are carefully designed. It uses the principle of planetary motion and does planetary motion agitator in barrels to mix crushed, powder and liquid food and other functions. The machine is working smoothly. For safety, because it is equipped with protective cover, it is safe and reliable, and equipped with multistage speed and a variety of agitator, the user can according to different requirements, select the appropriate speed and agitator to realize these functions. Spare parts ,which are in contact with food, are made of stainless steel or with special surface treatment, all fit for national health standards.

The machine is with good appearance, convenient operation, high working efficiency, and is suitable for hotels, restaurants, restaurants, food processing plants and canteen food, also for the pharmaceutical, chemical raw materials such as factories and mines modulation unit raw material.

Motor is improved by using German technology, and with the centrifugal switch which lets machine turn on/ off quickly. A full copper wire high-temperature motor has the ability of heating dissipation.

The whole machine gear is all processed by after precision machining and special heat treatment. Turbine, worm, bearings are produced by our company patent design, durable. Machine can be used easily and conventional and Working parts of products is easy to install, unpick and wash. High-quality stainless-steel cylinder and stainless-steel accessories are clean and healthy.

Standard Attachments: agitator with snake type, pat type, bud type. Speed can be adjusted depending on the type of agitator to achieve the best effect.

INSTALLATION

When you dismantle the packing after buying, please check in detail whether there is damage which is due to improper transportation or storage and accessories are complete. If there are damaged or missing parts , please inform distribution unit processing or replacement within seven days.

The Mixer should be installed in a dry ventilation, no corrosion and no flammable and no explosive substances indoors. Blender is installed on the hard ground, the ground needs to bear the pressure of 200 kilograms, the ground tilt Angle is not greater than 5 degrees. Keep the Mixer no less than 15cm from the nearest wall.

If you do not have the plug of the power supply lead, machine should be connected to the whole level disconnect device which is installed on a fixed position by the user at least 3mm . The disconnect device rated current shall be greater than or equal to 25 A.

Machine is equipped with motor overload protection device, in the case of overload or be blocked, the motor is automatically cut off power supply to keep a security protection for motor. In this situation the power supply must be cut off, remove obstacles, and then connected to the power and restart the machine.

Place the mixer in a convenient location. There should be adequate space around the mixer for the user to operate the control and install and remove bowls.

ELECTRICAL CONNECTIONS

WARNING: THIS SUPPLY CORD ON THIS MACHINE IS PROVIDED WITH A THREE-PRONG GROUNDING PLUG. IT IS IMPERATIVE THAT THE OUTLET TO WHICH THIS PLUG IS CONNECTED BE PROPERLY GROUNDED. IF THE RECEPTACLE IS NOT THE PROPER GROUNDING TYPE, AN ELECTRICIAN SHOULD BE CONTACTED.

WARNING: THIS SUPPLY CORD ON THIS MACHINE IS PROVIDED WITH A THREE-PRONG GROUNDING PLUG. IT IS IMPERATIVE THAT THE OUTLET TO WHICH THIS PLUG IS CONNECTED BE PROPERLY GROUNDED. IF THE RECEPTACLE IS NOT THE PROPER GROUNDING TYPE, AN ELECTRICIAN SHOULD BE CONTACTED.

OPERATION WARNING: MOVING BEATER IN THE BOWL. KEEP HAND, CLOTHING, AND UTENSILS OUT WHILE IN OPERATION.

Cleaning

- This unit has been coated for shipping purposes, please clean before use.
- Do not use any liquid pressurized cleaning equipment on this machine.
- Disconnect the power supply before cleaning.
- Only use food grade non-abrasive cleaning agents.
- Follow any additional cleaning / maintenance listed below.
- Do Not Wash the Machine Directly with Water

Features

The BakeMax BMPME30 – 30 Qt Planetary Mixer provides durability, long life, and excellent mixing performance. They are safe, easy to use and capable of a broad range of dough and food mixing applications.

Features:

- 100% Gear Driven
- 1HP Motor offers enough power to mix Stiffer Doughs and Larger Batches
- All metal and die-cast aluminum body
- Transmission is made of Hardened Alloy Steel Gears
- All Shafts are Mounted in Ball Bearings
- Manual 3 Speed Control (113 / 168 / 400 RPM)
- Planetary Mixing Action ensures perfect results
- Simple hand lift for tool change and bowl removal
- Includes Dough Hook, Flat Beater and Wire Whip
- Safety Guard has Automatic Shut-Off Safety Feature when the Guard is Opened at any Speed
- Start & Stop Button
- Plug & Go Nema 5-15P Plug
- 1-Year Limited Warranty

Technical Specifications:

- Exterior Dimensions (WDH): 20” x 23” x 33”
- 110V / 17A / 1100W / 60Hz / 1Ph
- Net Weight 130 lbs.

Shipping Specifications:

- Packaged Dimensions (WDH): 22” x 25” x 40”
- Packaged Weight 167 lbs.

All models are furnished with 2 BUTTON SWITCHES which control the power to the mixer.

The GEAR SHIFT LEVER (No.3) is used to change speeds. Always stop the mixer before changing speeds. To change speeds, turn the switch OFF, move the gear shift lever to the desired speed, and turn the switch back ON.

Speed 1 (low) - This speed is for heavy mixtures such as bread dough, heavy

- Batters and potatoes.
- Speed 2 (medium) - This speed is for light dough which must raise quickly, heavy batters, and some whipping operations.
- Speed 3 (high) - This speeds fast speed for light work such as whipping cream, beating eggs, and mixing thin batters.

1. Bowl Lift Slideways
2. Bowl Lift Handle
3. Gear Shift Lever
4. Drip Cup
5. Agitator
6. Bowl

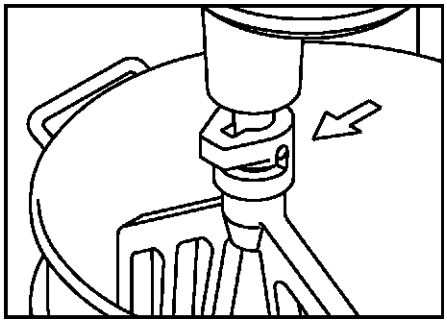

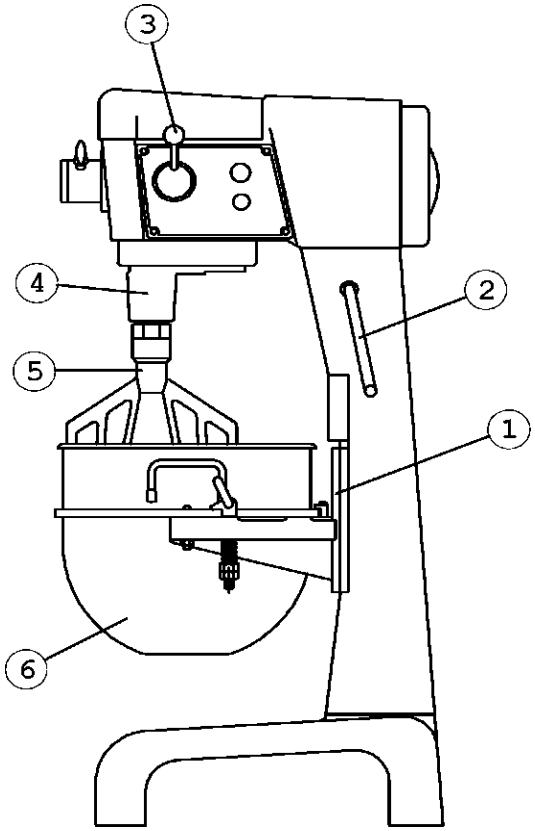

AGITATOR

To install an agitator (No 5), the bowl must be installed and fully lowered. Place the agitator in the bowl, push it up on the agitator shaft, and turn it clockwise to seat the shaft pin in the slot of the agitator shank.

DOUGH HOOK:

The moisture content of heavy dough is critical when selecting proper mixing speed. You should never use 2nd speed when mixing dough with a dough hook. **Kneading dough should be according to the nameplate rated quantity, water addition is 47% ~ 50% of flour weight, appropriate chooses low speed."**

BEATER:

It is commonly used for thin batters, cake, and mashing potatoes, like stuffing and preferably to be used at middle speed.

Wire Whip

It is best for whipping cream and beating eggs and preferably to be used at high speed.

BOWL - CAPACITY: 30 QUART

New mixers bowls and agitators (beaters, whip, and dough hooks) should be thoroughly washed with hot water and mild soap solution, rinse a mild soda or vinegar solution, and thoroughly rinsed BEFORE being put into service.

This cleaning procedure followed for bowls and agitators before whipping egg white eggs.

The bowl must be installed before the agitator. To install lower bowl support. Position the bowl so the alignment back of the bowl is in the bowl retainer and the alignment of the bowl support fits in the holes on the sides of the bowl.

MAINTENANCE

NOTE: ALL MAINTENANCE WORK SHOULD BE DONE ONLY AFTER UNIT HASBEEN DISCONNECTED FROM ELECTRICAL POWER AND GROUNDING. Never use a metal or stiff brush to clean the mixer. Never clean the mixer with a water hose or any fluid pressure.

The mixer should be thoroughly cleaned daily. Bowls and agitators should be removed from the mixer and cleaned in a sink. DO NOT use a hose to clean the mixer - it should be washed with a clean damp cloth.

The transmission case and planetary mechanism should be inspected weekly for leaks, damage, etc. Should it become necessary to repack the ball bearings, an authorized service technician or the manufacturer should be contacted. Use of unproved grease of lubricants may lead to damage and void the unit's warranty.

The **bowl lift slid ways** should be lubricated semi-annually, or more often under heavy usage. Disconnect the unit from the power supply before removing the top housing or apron. The **drip cup** (Fig. 1) should be inspected periodically for moisture or lubricant dripping. Remove the cup and wipe it with a soft cloth.

CLEANING

The mixer should be thoroughly cleaned daily.
Bowls and agitators should be removed from the mixer and cleaned in a sink.
The drip cup should be removed periodically and wiped clean. A large flat blade screwdriver may be used to remove the drip cup **MIXING HEAVY DOUGH**
The moisture content of heavy dough is a critical factor when selecting proper mixing speed. You should never use 2nd speed when mixing heavy dough with an Absorption Ratio (AR) of 50% or less. To determine the Absorption Ratio (AR) of a product, divide the water weight by the flour weight.
Example: Calculate the Absorption Ratio of a mixture containing 10 lbs. Of flour

www.BakeMax.com

Mixing Dough & Capacity Information

The moisture content of heavy dough is a critical factor when selecting proper mixing speed. You should never use 2nd speed when mixing heavy dough with an Absorption Ratio (AR) of 50% or less. To determine the Absorption Ratio (AR) of a product, divide the water weight by the flour weight.

Example: Calculate the Absorption Ratio of a mixture containing 10 lbs. Of flour and 5 lbs. of water.

$$5 \div 10 = 0.50 = 50\ \% = AR$$

Notes:
- If using high gluten or rice flour, please reduce capacity by 10%.
- If using water colder than 70˚F, ice, or chilled flour, please reduce capacity by 10%.
- Attachment hub should not be used while mixing.
- Mixer should be powered off when changing speeds

This chart should be used as a guide only. Type of flour and other factors can vary and may require batch size to be adjusted.

Capacity Conversion:
- 1 Gallon of Water Weighs 8.33 lbs.
- 1 Liter of Water Weighs 1 kg or 2.2 lbs.
- 1 lbs. = 0.454 kg / 1 kg = 2.2lbs.
- 1 US Liquid Quart = 0.946 Liters

Speed:
- *1st Speed Only

PRODUCT	TOOL	BMPME30
Egg Whites	Whip	1.5 qts.
Mashed Potatoes	Beater	22 lbs.
Mayonnaise (qts. Oil)	Beater	12.7 qts.
Meringue (qts. Water)	Whip	1 qts.
Waffle/Pan cake Batter	Beater	12 qts.
Whipped Cream	Whip	6 qts.
Cup Cake / Layer Cake	Beater	30 lbs.
Sponge Cake (w/ Flour & Butter)	Whip	22 lbs.
Sugar Cookie	Beater	22 lbs.
Bread or Roll Dough (Light/ Medium, 60% AR)	Hook	16.5 lbs. of Flour*
Bread or Roll Dough (Heavy, 55% AR)	Hook	14.5 lbs. of Flour*
Thin Pizza Dough, Pasta, Basic Egg Noodle (40% AR, Max 5 Minutes of Mixing Time)	Hook	13.5 lbs. of Flour*
Medium Pizza Dough (50% AR)	Hook	13.5 lbs. of Flour*
Thick Pizza Dough (60% AR)	Hook	16.5 lbs. of Flour*
Raised Donut Dough (65% AR)	Hook	13.5 lbs. of Flour*
Whole Wheat Dough (70% AR)	Hook	16.5 lbs. of Flour*

BakeMax®

www.BakeMax.com

BMPME30 Parts Breakdown

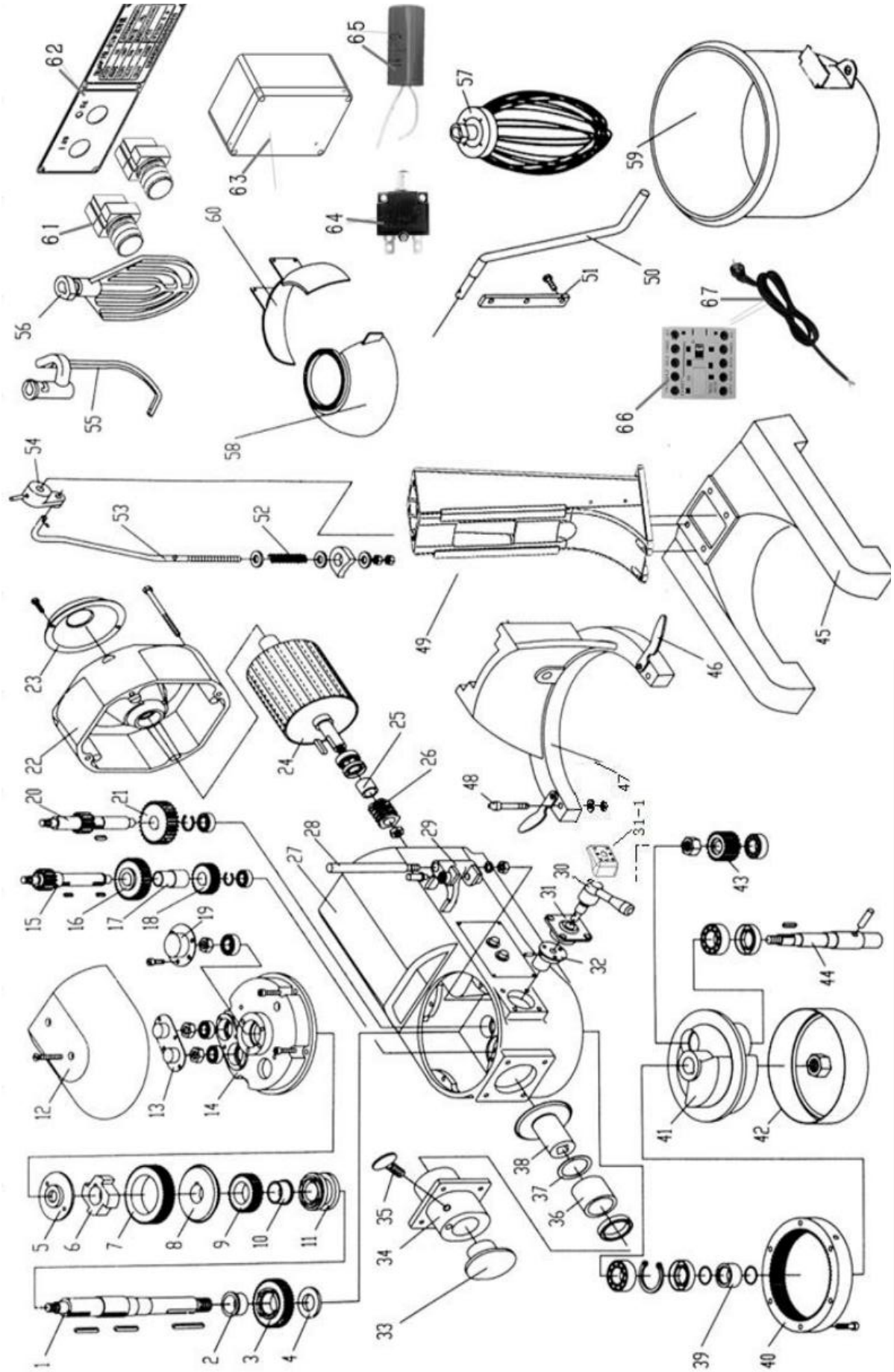

Part No.	Part Name
1	main spindle
2	shaft sleeve
3	large tooth gear
4	gasket for main spindle
5	gland
6	clutch
7	upp gear for main spindle
8	cushion block
9	small tooth gear
10	shaft sleeve
11	splicer
12	upper cover
13	top cover of transmission axile
14	cover of seat of bearing
15	reducing axile
16	top gear of reducing axile
17	bushing
18	down gear of reducing axile
19	top cover of main spindle
20	transmission axile
21	turbing
22	back cover
23	end cap
24	motor
25	oil sealing
26	worm
27	frame
28	fork axile
29	fork part
30	turner
31	seat of turner
31-1	cover for seat
32	eccentic bushing
33	front cap
34	connector for mincer
35	self-locker belt
36	needle bearing
37	wave-form gasket
38	small bevel gear
39	sealing bushing
40	inner gear
41	stirring seat
42	drip tray
43	planetrary gear
44	strirring shaft
45	base
46	locker for kettle
47	carriage
48	locating pin
49	colum
50	turner
51	platen
52	spring
53	spring of union lever
54	union lever
55	stirring rod
56	beater
57	whip
58	protection cover
59	kettle
60	fixing cover
61	switch
62	seat for switch
63	electric board
64	termal protection switch
65	capacitor
66	AC contactor
67	wire and plug

Warranty & Service

BakeMax provides a 1-Year Limited Parts and Labor warranty on most items, there are select items which carry a Limited 2-Year Warranty. Extended Warranty is available on some products. Please contact us for details. The Warranty is not transferable and is limited to original installation of equipment sold by BakeMax for the original user.

For all Warranty Claims, Proof of Purchase and/or Serial Number is required. Once the machine is approved, BakeMax will provide our customers with on-site Warranty Coverage on all equipment more than 100lbs. BakeMax assumes no responsibility for down time or loss of product. Repairs must be Pre-Authorized by BakeMax and have a Service Authorization Number issued prior to commencing Warranty Service.

Warranty begins 10-Days after shipping from warehouse; delays in installation which would extend the Warranty must be Approved. All equipment must be installed and connected by Qualified Professionals in accordance with the Manual Specification. Products shipped are to be inspected at time of delivery, the receiver is responsible for inspection.

Any abuse or improper use of the equipment will void the warranty. This includes failure to follow all cleaning instructions, improper installation, improper maintenance, failure to follow capacity charts, improperly wired electrical connections. The Warranty does not apply to abuse, willful or accidental damage, or to products used for other than their intended purpose. Normal wear parts such as Accessories, Attachments, or Electrical Components such as Fuses, Bulbs, Elements, and Switches carry a 90-Day Warranty only.

Bench Warranty (Machines Weighing 100 lb. or less)

Once the machine is Approved for Warranty Service, if the machine requires Warranty work in less than 30 days of purchase date, BakeMax will pay all shipping charges. Once the machine is received and repaired it will be returned to the user at BakeMax expense. Freight Damages during return shipping is the responsibility of the owner of the machine.

The following is not covered under the BakeMax Warranty:

1. Overtime Labor Rates are not covered by BakeMax.
2. All parts will be shipped via Ground Courier only; If Express Shipping is required, it will be the responsibility of the Customer or Dealer.
3. Travel for Warranty Service is covered up to 100 Miles /160 Km Roundtrip, any further milage will be the responsibility of the Customer or Dealer.
4. There is no on-site Warranty Service for Residential Addresses or addresses outside of the contiguous United States (*Lower 48)* or Canada.

***BakeMax machines sold outside of the contiguous United States* (*Lower 48), or Canada will carry 1-Year Parts Warranty only.*

Terms & Conditions

Terms
Net 15 days subject to Credit Approval. All past due Accounts are subject to 2% per month Service Charge as per Credit Application. We accept Visa, MasterCard, and Discover Credit Cards. We also accept E-Transfer & Wire Transfer, additional fees may apply.

Pricing
All prices are subject to change without notice. All prices are Sales Tax Extra, should you be claiming Tax Exemption, Tax Exempt Forms must accompany your Purchase Order. BakeMax products are sold in Canadian and US Dollars. BakeMax is not responsible for specifications errors or printing errors.

Shipping
Free shipping to Canada and the U.S. Minimum order $6,000 for BakeMax and $10,000 for BakeMax America Cooking Line. Tailgate Delivery is $90.00 minimum. All checks made Payable to Titan Ventures International Inc. BakeMax is not responsible for goods damaged during shipping. BakeMax is not responsible for any delays in delivery once product has left our Warehouse and is in the carrier's possession. Products shipped are to be inspected at time of delivery, the receiver is responsible for inspection. Damaged Freight Claims are to be claimed with the carrier. BakeMax assumes no responsibility for Damaged Freight. Shipping Insurance available by request. By signing your name on the delivery receipt without noting any damages, you are stating that you have received your shipment in Acceptable Condition.

Return Policy
Returns will not be Approved unless in Writing. Returns must be made within 30-Days of Purchase and must have a Return Authorization Number issued before returning. The purchase order number, reason for return, and the serial number(s) of the unit are required for the Return Authorization Number. Minimum return amount of $100.00.

Returns are subject to a minimum restocking fee of 30%. The cost of any repairs or re-crating required will be charged back to the dealer. If there is a manufacturer's defect BakeMax® will pay standard freight returned and prepaid shipping back to the customer.

Special Order Items, Clearance / Discontinued Equipment, Parts, Refurbished/Demo Equipment, or Non-Standard items are not Returnable.

Ordering Information
Send purchase orders to BakeMax via e-mail orderdesk@bakemax.com or Fax (506-859-6929). Use Model or Part number when ordering including Voltage Requirements, and Product Description. Please include the Dealer, Name, Address, terms, special delivery, or instructions required or attention names to be applied to packaging. Please notify BakeMax should you need order confirmation or tracking numbers, by calling 1-800-565-2253 or email orderdesk@bakemax.com.

Special Terms and Conditions
BakeMax reserves the right to make improvements or equipment changes without prior permission. Setup and Installation are the end user's Responsibility. Failure to properly Install or Maintain Equipment may Void Warranty.

Catalog, Spec Sheets and Website
BakeMax is not liable for incorrect information found in our Catalog, Spec Sheets or Website. Please contact us to confirm specifications. Pictures and specifications are for general purposes only. Product may not be exactly as shown. Prices and availability may change at any time without notice. Dimensions shown may change at any time without notice.