Safety Information

- This device may only be repaired by the authorised technical assistance service using original parts and components.

- Before starting any maintenance operation, including replacement bulbs or cleaning, always disconnect the equipment from the power circuit, removing the plug from the socket.

- Connect the equipment into a grounded outlet

- If the power cord is damaged, it may only be replaced by the manufacturer, by its after-sales service or by persons properly qualified and recognized in order to avoid danger.

- Do not introduce volatile, inflammable or explosive liquids into the unit.

- The device should not be used by persons (including children) with reduced physical, sensory or mental abilities, by inexperienced individuals or by anyone who is not familiar with the product. These individuals should at least be supervised by someone who assumes responsibility for their safety or who has received preliminary instructions relating to operation of the device.

- Do not allow children to play with the appliance.

- In case of heated cabinets:

  - There is equipotential bonding which is designed to match or approximate the potential of the installation's mass or metal parts, not intended to conduct electrical current. This device is equipped with an equipotential terminal for this purpose. The equipotential terminal is marked with the symbol next to it and allows the connection of conductors with a minimum section of 10 mm^2.

  - Be careful of contact with the equipment since this works at high temperatures. The symbol has the goal of indicating the hot surfaces of the equipment.

- We reject any kind of responsibility if these rules are not followed.

3560 NW 56th Street
Fort Lauderdale, FL 33309
Tel.: 786.600.4687 / Toll Free: 844.218.8477
Fax.: 786.661.4100

5659 Royalmount Avenue
Montreal, Qc, Canada H4P 2P9
Tel.: 514.737.9701 / Toll Free: 888.275.4538
Fax.: 514.342.3854 / Toll Free: 877.453.8832

sales@mvpgroupcorp.com www.mvpgroupcorp.com

Printed 05/2020

Table of Contents

1. GENERAL 3

PACKAGING 3

UNPACKING 3

PACKAGING AFTER USE 3

LOCATION 4

HANDLING 4

ELECTRICAL PREVENTION 5

LOADING 5

MAINTENANCE 6

REPLACEMENT OF BULBS 7

EMERGENCY SITUATIONS 7

2. REFRIGERATED EQUIPMENT 8

EQUIPMENT WITH REMOTELY ASSEMBLED CONDENSING UNIT 8

WATER CONDENSERS 9

COMMANDS 9

OPERATING TEMPERATURES 10

CLASSES OF TEST PACKAGES 10

CLIMATE CLASSES 11

RECYCLING 11

MOST COMMON PROBLEMS 12

COMMANDS 13

OPERATING TEMPERATURES 13

MOST COMMON PROBLEMS 13

DATA PARAMETERS 14

1. General

Packaging

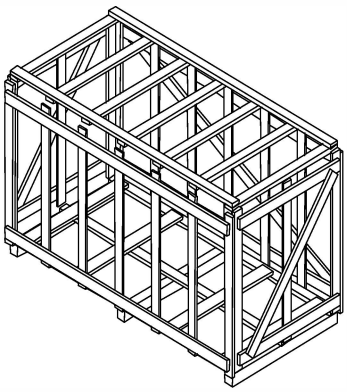

- All equipment is supplied with packaging, to prevent damage during transport. The packaging consists of a wooden palette, which serves as a base, and bubble wrap surrounding the appliance, to protect it from bad weather and possible knocks and bumps.

- These devices can be packed in wooden crates upon costumer request, thus yielding greater protection and the ability to stack.

- Always follow the directions on the packaging.

Unpacking

- Remove the bubble wrap surrounding the equipment and, with the help of pallet trucks, lift it up and remove the wooden pallet.

- Verify the integrity of the equipment and if there is a label of features. If you have any concerns or suspect some anomaly, do not use the equipment and contact your dealer.

Packaging after use

- When it is expected that the equipment will not be used during long periods, it should be stored in its original container, in an appropriate place, and protected from bad weather.

- To avoid corrosion and to better preserve the appliance, before packing it, it should be washed in lukewarm water with 5% neutral detergent and afterwards dried with a soft cloth. You must also clean the condenser, with the help of a soft brush and a vacuum cleaner.

Location

Install the equipment in an area that is clean and uncluttered, away from heat sources (e.g. radiators, sunlight and ovens) and air currents (e.g. air conditioning vents, fans and doors) and always in places where there is no water projection (rain, etc.).

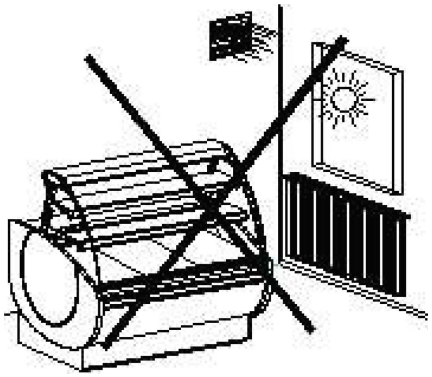

Do not install the equipment in environments where the temperature is above 25 °C and the relative humidity is above 60%.

This equipment is not suitable for working in dangerous environments with risk of fire, explosion or radiation.

You should not store explosive substances such as aerosols containing flammable propellants.

Handling

Never lift the unit by the side panels and to move it, always use a pallet truck.

Level the equipment, using for this purpose the levelling feet, with the help of a spanner (A).

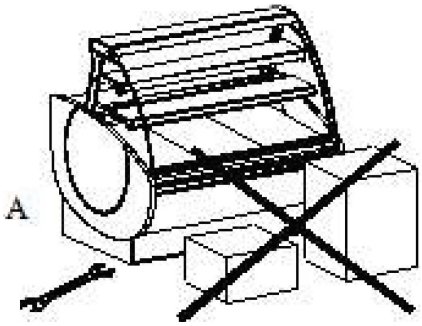

Always remove the PVC film that protects the plates.

Ensure that the equipment is always levelled and in the correct operating position.

Place the equipment on site, so that the vent grille of the compressor group and all the area around it does not become obstructed, to allow for perfect air circulation.

Electrical Prevention

- Do not connect the equipment to multiple sockets.

- In equipment with a socket on the Control Panel, only connections of devices that consume a **maximum of** SA are allowed.

- All the equipment is designed to work with the voltage used in the country of destination. Please make sure that extensions are in good condition and have the same features as the grounded sockets used in the installation.

- If the power cord is damaged, it may only be replaced by the manufacturer, by its after-sales service or by persons properly qualified and recognized in order to avoid danger.

- We reject any kind of responsibility if these rules are not followed.

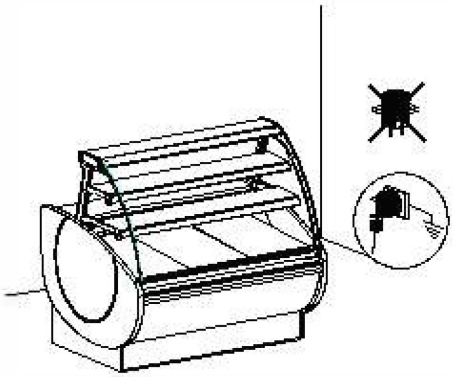

Region	Tension (V)	Frequency [Hz]
U.E.	230	50
Brazil	220	60
Australia	230	50
China	220	50
Japan	100	50/60
USA	115/220	60
UAE	220	60

Loading

- Before loading products in the equipment it is necessary to turn it on for at least one hour with the lights off and acrylic doors (if any) closed.

- Place the products in such a way as to leave spaces between them, allowing the cold air to flow perfectly.

- Never place the products near air ventilation/suction grids, so as to allow for perfect air circulation, both on the products as well as the evaporator.

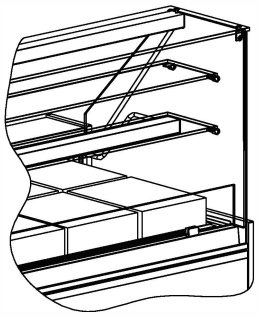

- Always place products in the equipment that are around the same temperature as the equipment. Remember that this is conservation equipment. Do not overload the equipment. Abide by the **load limit** - 26.9lb/ft in the exposure plan and 9.4lb/ft on each shelf.

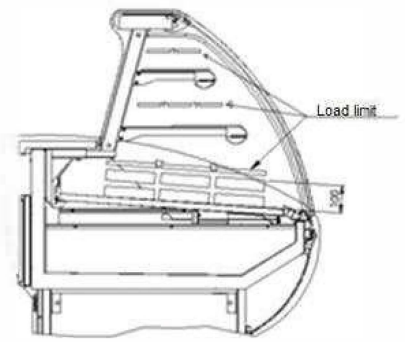

Maintenance

- Periodically check the state of the power cord and the electrical outlet. If they are damaged, call for service.

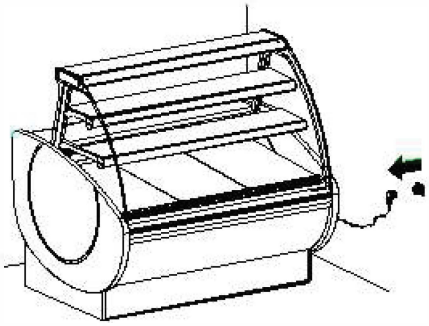

- Before starting any cleaning, always disconnect the equipment from the power grid.

- For good conservation of the equipment, you should clean it periodically, proceeding as follows:
  - Disconnect the equipment from your power supply circuit.
  - Remove the products.
  - Wash the equipment with warm water with 5% neutral detergent.
  - Dry with a soft dry cloth. Avoid leaving any residues.
  - Clean the glass using a suitable detergent.
  - Under no circumstances should alcohol, methylated spirits or solvents be used as they may damage the plastics and painted surfaces.

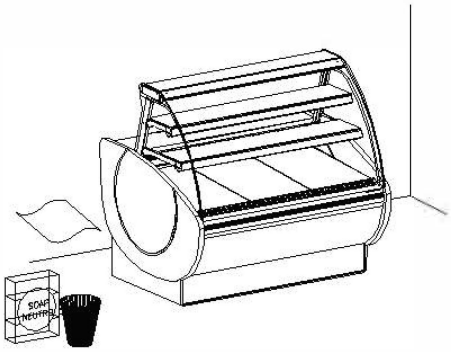

Replacement of bulbs

- Disconnect the equipment from the power circuit, taking the cable out of the power socket.
- Remove the acrylic protection with the help of a screwdriver (do not apply force so not to break it).
- Remove the lamp brackets and replace it with another of the same reference or equivalent.
- The switch is located on the control panel at the bottom of the equipment.

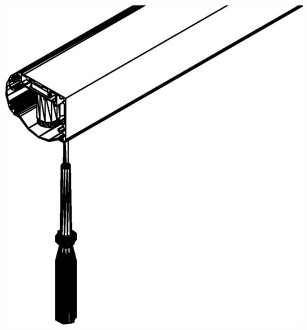

Emergency situations

In case of fire, use a chemical powder extinguisher, aiming the jet at the base of the flames.

2. Refrigerated equipment

- At least once a month, clean the condenser unit with a soft brush and a vacuum cleaner. Dust and fluff prevent good air circulation. A dirty condenser decreases the performance of the equipment and increases energy consumption.
  To access the condenser, remove the compressor group protection grid, clean it carefully, avoiding touching other components, putting it back afterwards.

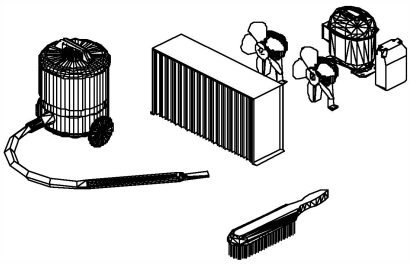

- According to the climate class (class 3) do not install the equipment in environments where the temperature is above 25 °C and the relative humidity above 60%.

- Place the equipment on site, so that the vent grille of the compressor group and all the area around it does not become obstructed, to allow for perfect air circulation.

Equipment with remotely assembled condensing unit

- If the equipment has a remotely assembled condensing unit, all the advice for the aeration of the group incorporated in the cabinet is no longer valid, however we continue to recommend assembling the condensing unit in a cool place with good air circulation. All other advice and care should continue to be respected, in order to achieve the best performance that the equipments were designed for.

- For equipment with a remotely assembled condensing unit, this must be the average/high temperature type, with cooling capacity equivalent to that specified in the technical features of the equipment and prepared for the refrigerant gas indicated on the label.

- The installation of the remote unit should be performed only by persons properly qualified and recognized for this operation.

Water condensers

- Regularly check the water level in the condenser water tray. If it is full, remove it, empty it, and put it back in its original position. Always check if the drain pipe remained on the tray.

- If your equipment has an automatic water defrosting system (kit with electrical heating element) periodically check the water tray, then you may still proceed to its evacuation and cleaning. You must disconnect the power connector and remove the mounting screws.

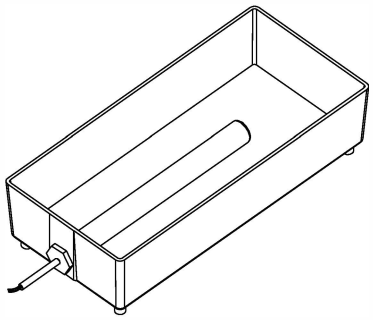

Commands

In the back of the machine there is a control panel and inside the compressor compartment group there is an electrical panel. Do not remove cover (except in the case of condenser cleaning).

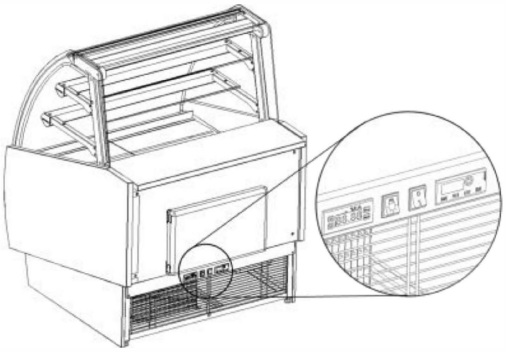

V PA R G L - Refrigerated Ice-cream

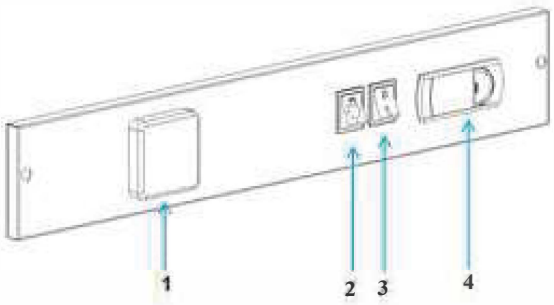

1 - Power outlet
2 - Lighting switch
3 - Main switch
4 - Digital controller

Operating temperatures

Equipment	Temperature (OC)	Temperature (Of)	Climate class	Temperature Class
V PA RGL	-20 / -18	-4.0 / -0.4	3	L1

Classes of test packages

Class	Highest temperature q_ah of the warmest test package, less than or equal to (°C)	Lowest temperature qb of the coldest test package, greater than or equal to (°C)	Lowest temperature q_a, of the warmest test package, less than or equal to (°C)
L1	-15	—	-18
L2	-12	–	-18
L3	-12	–	-15
M1	+5	-1	—
M2	+7	-1	–
H1	+10	+1	–
H2	+10	-1	–

Climate classes

Test room climate class	Dry Bulb Temperature (°C)	Relative Humidity(%)	Dew Point (°C)	Water vapour mass in dry air (g/kg)
0	20	50	9.3	7.3
1	16	80	12.6	9.1
2	22	65	15.2	10.8
3	25	60	16.7	12.0
4	30	55	20.0	14.8
5	27	70	21.1	15.8
6	40	40	23.9	18.8
7	35	75	30.0	27.3
8	23.9	55	14.3	10.2

Recycling

- When you decide not to use the equipment, or if you want to replace it, you should recycle it in accordance with the current regulations.
- Before recycling the equipment, you must request specialized personnel to recover the gas and oil of the cooling circuit.
- Do not forget, after dismantling the appliance, to separate the various materials that make it up: plastic, aluminium, rubber, glass, metals, etc.

Note: It is advisable to contact a company that specializes in this type of service.

Most common problems

Problem	Possible Cause	Resolution
The compressor does not start after 2 minutes?	The equipment is not connected to the power outlet.	Connect the equipment to an outlet with 230V~/50Hz or 115V~/60Hz in case it is prepared for those power feed values.
	The breaker that feeds the plug is off.	Turn the breaker on.
	The equipment has some malfunction.	Contact the technical agent.
The compressor never stops?	The condenser is dirty.	Clean the debris from the condenser with a soft brush and a vacuum cleaner.
	Lack of refrigerant fluid.	Contact the technical agent.
	Digital controller is out of order or malfunctioning.	Contact the technical agent.
	The evaporator is blocked with ice.	Perform a manual defrosting of the eauipment.
The equipment does not reach the set temperature?	The condenser is dirty.	Clean the debris from the condenser with a soft brush and a vacuum cleaner.
	Lack of refrigerant fluid.	Contact the technical agent.
	Excess of exposed product.	Remove product and distribute it properly.
	The evaporator is blocked with ice.	Perform a manual defrosting of the equipment.
The lamps do not light up?	The lighting switch on the control panel is off.	Turn on the switch on the control panel.
	Malfunction in fuse starters or lamps.	Replace the lamps or the starters.
	Malfunction in the electrical circuit of the equipment.	Contact the technical agent.
There is an increase of noise?	The condenser is dirty.	Clean the debris from the condenser with a soft brush and a vacuum cleaner.
	The evaporator is blocked with ice.	Perform a manual defrosting of the equipment.
	The compressor is damaged.	Contact the technical agent.
There is water spillage?	The tray is full.	Empty the water tray.
	The heating element for evaporation is broken.	Contact the technical agent.
	The level sensor is broken.	Contact the technical aQent.

Most common problems

Problem	Possible Cause	Resolution
The heating elements do not heat after two minutes?	The unit is not connected to the power outlet. The breaker that feeds the plug is off. The device has a malfunction.	Connect the equipment into an outlet with 230V~/50Hz or 115V~/60Hz in case it is prepared for those power feed values. Turn the breaker on. Contact the technical agent.
The device does not reach the set temperature?	Broken heating element Excess of exposed product. Open doors	Contact the technical agent. Remove product and distribute it properly. Close the doors.
The lamps do not light up?	The lighting switch on the control panel is off. Malfunction in fuse starters or lamps. Malfunction in the electrical circuit of the device.	Turn on the switch on the control panel. Replace the lamps or the starters. Contact the technical agent.
There is water spillage ?	The tray is full. The hose is out of the water tray.	Empty the water tray. Place the hose in the correct location on the water tray.

HYDRA KOOL		
Date	Escala	Aprov.
31-01-14	N/A	DEA

KFM-GL-40 60 80-S

Features		Units	MODEL 40	60	80
Dimensions (Without End Walls)		inch	37.40	55.12	74.80
Height		inch	54.52		
Depth		inch	43.11		
Nº Max. Containers		–	10	16	22
Max. Allowable Weight on deck		lb	110	176	242
Package Size/ Dimension					
Net weight		lb	308	524	594
Gross Weight		lb	385	733	803
Operating Temperature		ºF	-7.6/-4		
(a) Climate Class		–	3		
(a) Temperature Class		–	L1		
R404 weight		oz	52.91	74.81	88.18
Expansion Valve			TES 01	TES 02	TES 02
Refrigeration Compressor		A	7,48	16,70	16,70
		W	860	1920	1920
		–	CAJ2446Z	2xCAJ2446Z	2xCAJ2446Z
Defrost Compressor		A	11,48	22,96	22,96
		W	1320	2640	2640
		–	CAJ2446Z	2xCAJ2446Z	2xCAJ2446Z
Impeller	Diameter	inches	7.87		
	Angle	º	34		
Condenser Fans		A	0,63		
		W	72		
		–	82CE-2010/9		
Evaporator Fans		A	0,09	0,17	0,17
		W	10	20	20
		–	MA58 1-12-100		
Work top Resistor		A	0,43	0,65	0,87
		W	50	75	100
Side Anti-Condensing Resistor		A	0,43		
		W	50		
Front Glass Resistor		A	0,65	0,87	1,09
		W	75	100	125
Lighting Power		A	0,16	0,31	0,36
		W	18	36	41
Cooling Capacity		BTU	2984	5968	5968
		W	875	1750	1750
Rated Power Refrigeration		A	9,87	19,77	20,24
		W	1135	2273	2328
Rated Power Defrost		A	13,87	26,03	26,50
		W	1595	2993	3048
Power Supply		V~HZ	115~60		

For	(a) t_{amb} = 25ºC HR = 60%	(b) t_c = 45ºC ; t_e = -30ºC		FR EN PT 01