Service Parts

This is the illustrated service parts list for the NH0422, NS0422, FS0522, NH0622, NS0622, FS0822, NH0922, NS0922, FS1222, NH1322, NS1322, FS1522 air cooled, water cooled or remote air cooled ice machine heads.
Several models are listed together, be sure to select the correct part based on the complete model number, including voltage.

Voltage codes:
- -1 = 115/60/1
- -32 = 208-230/60/1
- -3 = 208-230/60/3
- -6 = 230/50/1

Contents

Exterior - NH0422, NS0422, FS0522, NH0622, NS0622, FS0822 ..... Page 2
Exterior - NH0922, NS0922, FS1222, NH1322, NH1322, FS1522 ..... Page 3
Interior Cabinet, Water, and Chute Systems ..... Page 4
Refrigeration Condensing, Air Cooled ..... Page 5
Condenser Fan Motor System - NH0422, NS0422, FS0522, NH0622, NS0622, FS0822 ..... Page 6
Condenser Fan Motor System - NH0922, NS0922, FS1222, NH1322, NH1322, FS1522 ..... Page 7
Refrigeration Condensing, Water Cooled ..... Page 8
Refrigeration Condensing, Remote Cooled ..... Page 9
Remote Condenser - ERC111 or ERC311 ..... Page 10
Evaporator System, Hard Nugget (NH) ..... Page 11
Gear Reducer and Motor ..... Page 12
Electrical & Control Box ..... Page 13
Compressors and Hardware ..... Page 14
Wiring Diagrams ..... Page 15

Service Parts

Exterior - NH0422, NS0422, FS0522, NH0622, NS0622, FS0822

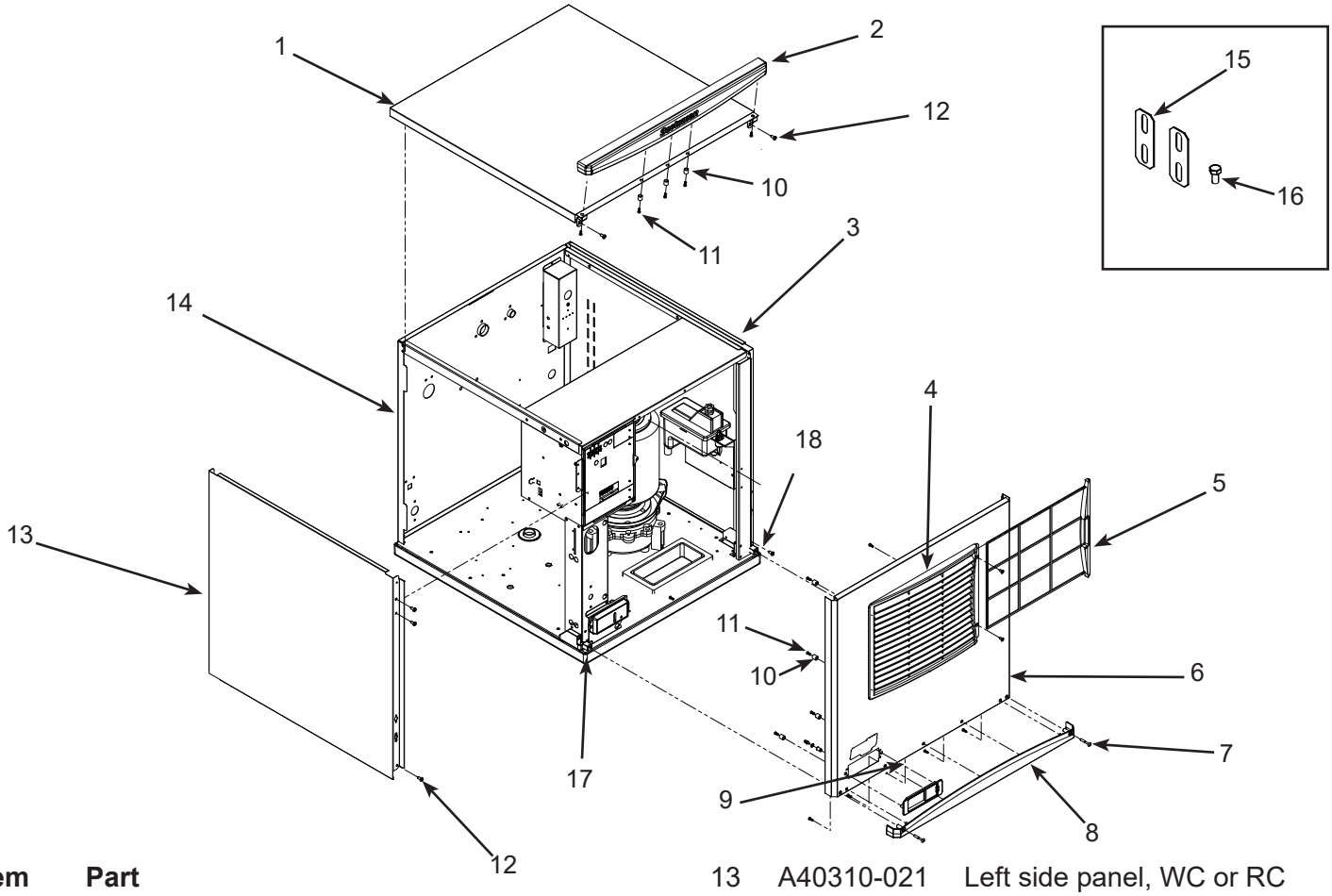

Item Number	Part Number	Description
1	A40309-022	Top panel, includes item 2
2	02-4819-02	Trim strip
3	A40335-021	Right side panel
4	02-4224-03	Louvers
5	02-4212-03	Air filter
6	A40308-025	Front panel, AC includes items 4, 5, 7, 8 and 9
6a	A40308-026	Front panel, WC or RC. Includes items 4, 5, 7, 8 and 9
7	03-1735-03	Screw
8	02-4820-02	Tim strip
9	02-4821-02	Bezel, includes standard door
9a	02-4822-02	Door, bezel secure
10	02-4824-01	Spacer
11	03-3836-02	Screw
12	03-1404-10	Screw
13	A40310-021	Left side panel, WC or RC
	A40310-023	Left side panel, AC
14	A41013-002	Back panel, WC or RC
15	A30911-015	Machine straps
16	03-1405-15	Screw
17	02-4823-21	*Panel mount kit, left
18	02-4823-22	*Panel mount kit, right

*Includes both screw receptacles

Service Parts

Exterior - NH0922, NS0922, FS1222, NH1322, NS1322, FS1522

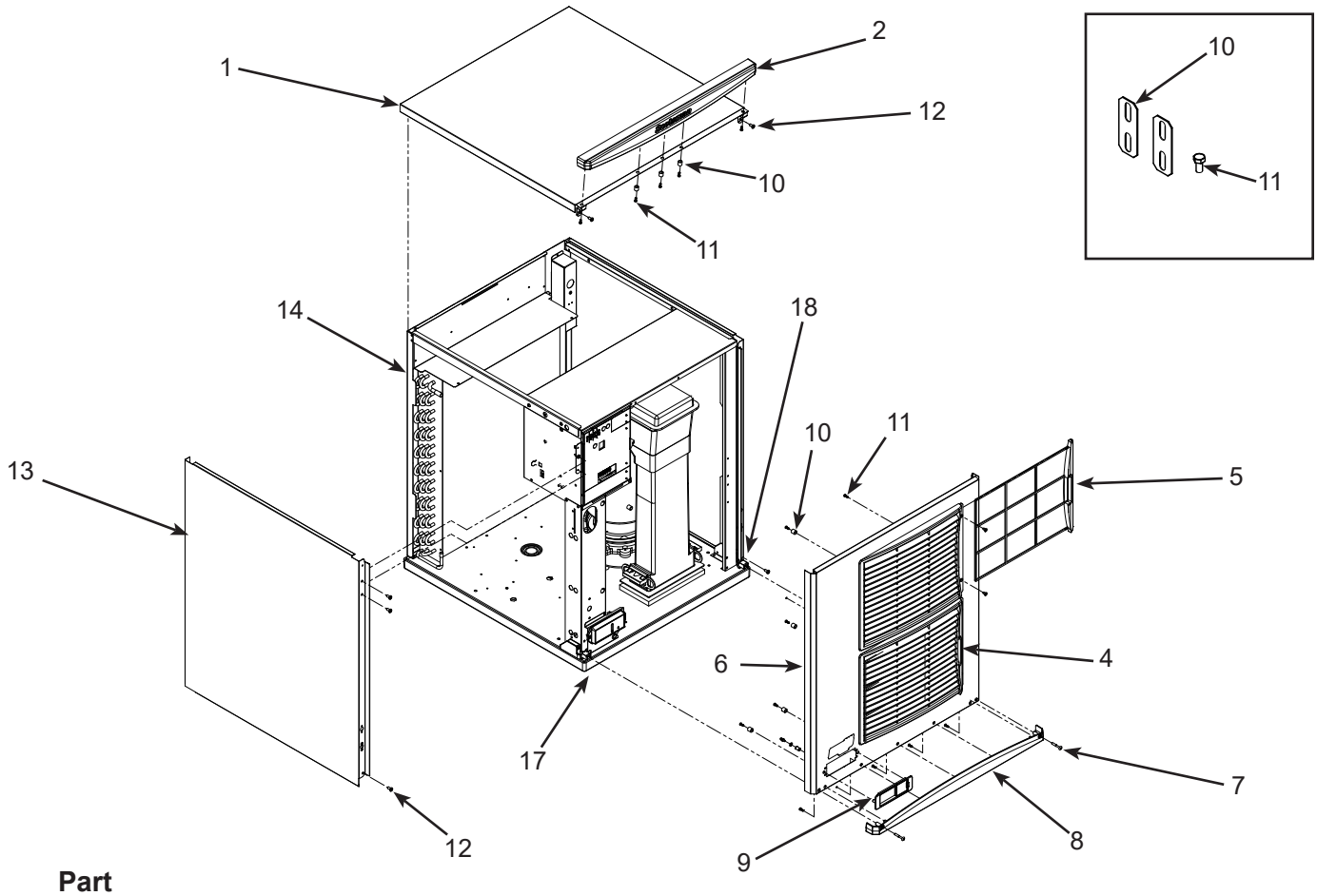

Item Number	Part Number	Description
1	A40309-022	Top panel, includes item 2
2	02-4819-02	Trim strip
3	A40335-022	Right side panel
4	02-4224-03	Louvers
5	02-4212-03	Air filter
6	A40308-028	Front panel, AC includes items 4, 5, 7, 8 and 9
6a	A40308-029	Front panel, WC or RC. Includes items 4, 5, 7, 8 & 9
7	03-1735-03	Screw
8	02-4820-02	Tim strip
9	02-4821-02	Bezel, includes standard door
9a	02-4822-01	Door, bezel with handle
9b	02-4822-02	Door, bezel secure
10	02-4824-01	Spacer
11	03-3836-02	Screw
12	03-1404-10	Screw
13	A40310-025	Left side panel, AC
	A40310-026	Left side panel, WC or RC
14	A41013-001	Back panel, WC or RC
15	A30911-015	Machine straps
16	03-1405-15	Screw
17	02-4823-21	*Panel mount kit, left
18	02-4823-22	*Panel mount kit, right

*Includes both screw receptacles

Service Parts

Interior Cabinet, Water, and Chute Systems

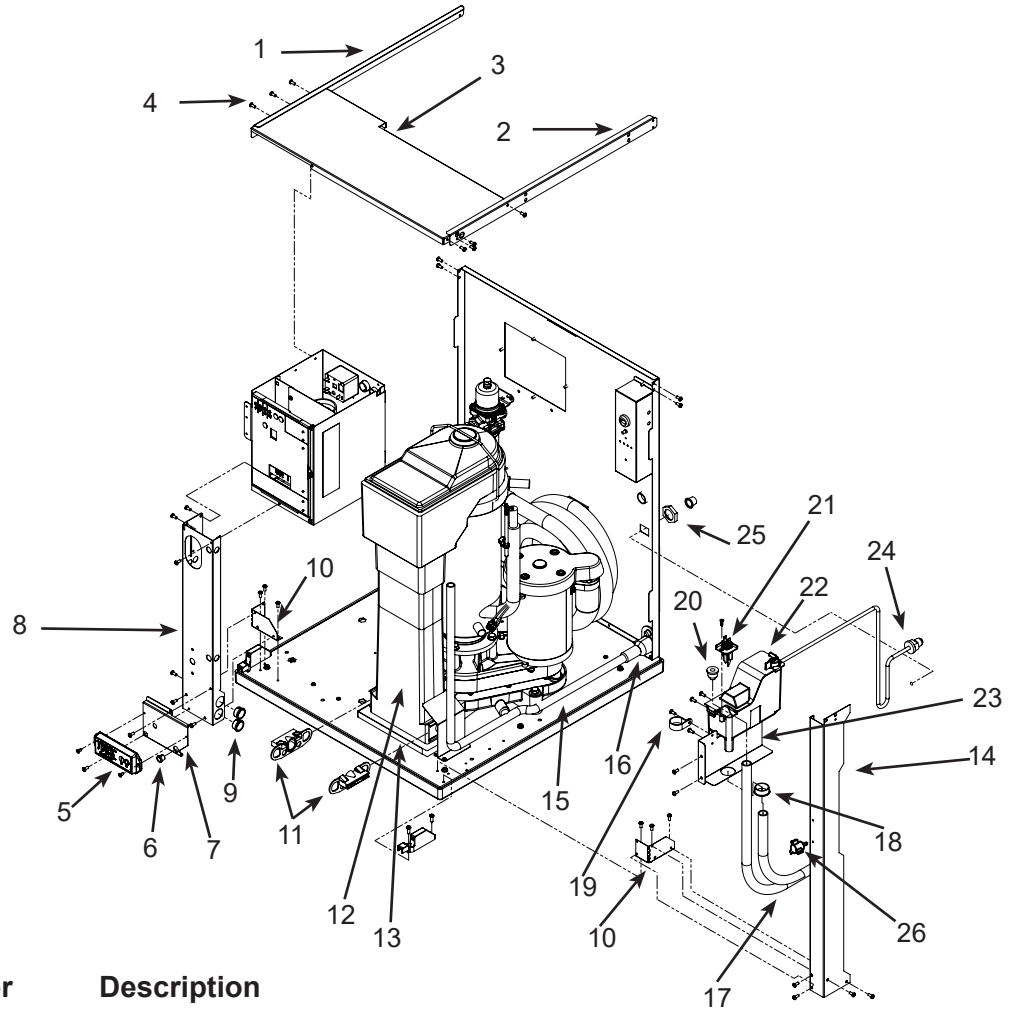

Item Number	Part Number	Description
1	A40361-001	Channel, top left
2	A40362-001	Channel, top right
3	A41005-001	Control box cover
4	03-1531-01	Screw
5	11-0622-21*	Lower display
*(includes bracket, membrane switch, harness)		
6	12-1213-04	Bushing
7	A40363-001	Bracket
8	A40364-001	Support post, front left, short
	A40357-001	Support post, front left, tall
9	12-1213-10	Bushing
10	A40367-001	Bracket, support post
11	A37708-021	Bin control set (2)
12	02-2929-03	Lower ice chute, short
	02-2929-04	Lower ice chute, tall
13	02-4357-01	Ice chute gasket
14a	A41004-001**	Support post, front left, short
	A41003-001**	Support post, front right, tall
14b	A41186-001***	Support post, front right
	A40364-001***	Support post, front left
15	02-5106-01	Drain tube
16	02-3692-04	Drain adapter
17a	A40189-001**	Evaporator inlet hose, short
	02-4752-01**	Evaporator inlet hose, tall
17b	A41197-001***	Evaporator supply tube.
18	12-1213-11	Bushing
19	03-3841-02	Loop clamp for drain tube
20	13-0973-01	Drain plug, vented
21	A40666-001	Water sensor
22	A40664-001	Water reservoir & valve
23a	A40029-001*	Water reservoir bracket
23b	A41187-001**	Water reservoir bracket
24	A41014-001	Water inlet assembly
25	03-1394-01	Pal nut
26	03-1675-04***	Thumb Screw

Short - NH0422, NS0422, FS0522, NH0622, NS0622, FS0822

Tall - NH0922, NS0922, FS1222, NH1322, NS1322, FS1522

** = A series model

*** = B series model

Service Parts

Refrigeration Condensing, Air Cooled

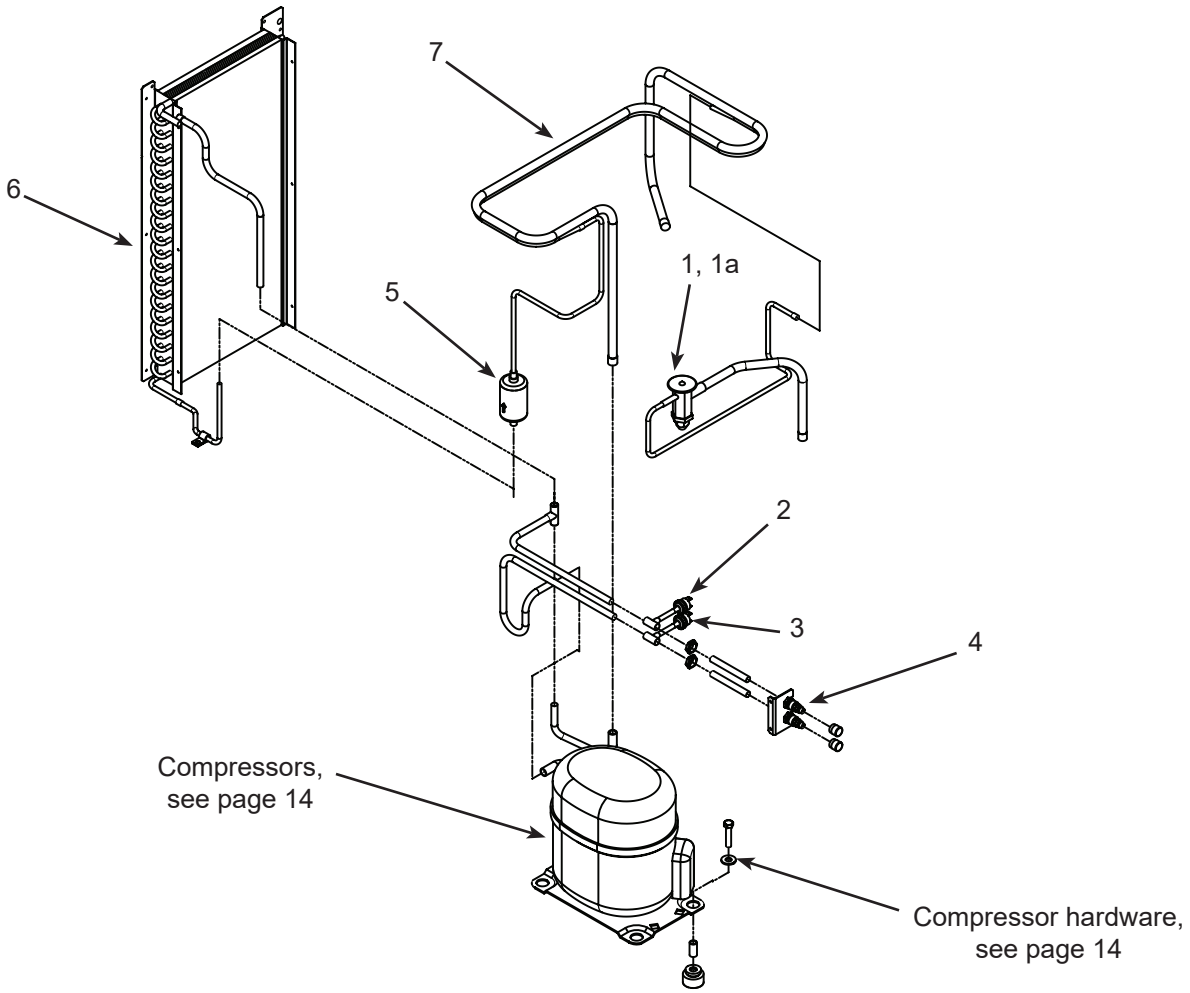

Item Number	Part Number	Description
1	16-1144-21	TXV, NH0422, NS0422, FS0522
	16-1144-22	TXV, NH0622, NS0622, FS0822
	16-1144-24	TXV, NH0922, NS0922, FS1222
	16-1144-23	TXV, NH1322, NS1322, FS1522
1a	02-4406-01	Insulation, TXV
2	11-0501-22	High pressure cut out sw
3	11-0502-21	Low pressure cut out sw
4	16-1137-01	Access valve seat
4a	16-1139-01	Access valve core
4b	16-1140-01	Access valve cap
5	02-3319-01	Filter dryer
6	18-8890-01	Air cooled condenser, fits N0422, F0522, N0622, F0822
	18-8935-01	Air cooled condenser, fits N0922, F1222,
	18-8936-01	Air cooled condenser, fits N1322, F1522
7	A41076-001	Heat Exchanger

Service Parts

Condenser Fan Motor System - NH0422, NS0422, FS0522, NH0622, NS0622, FS0822

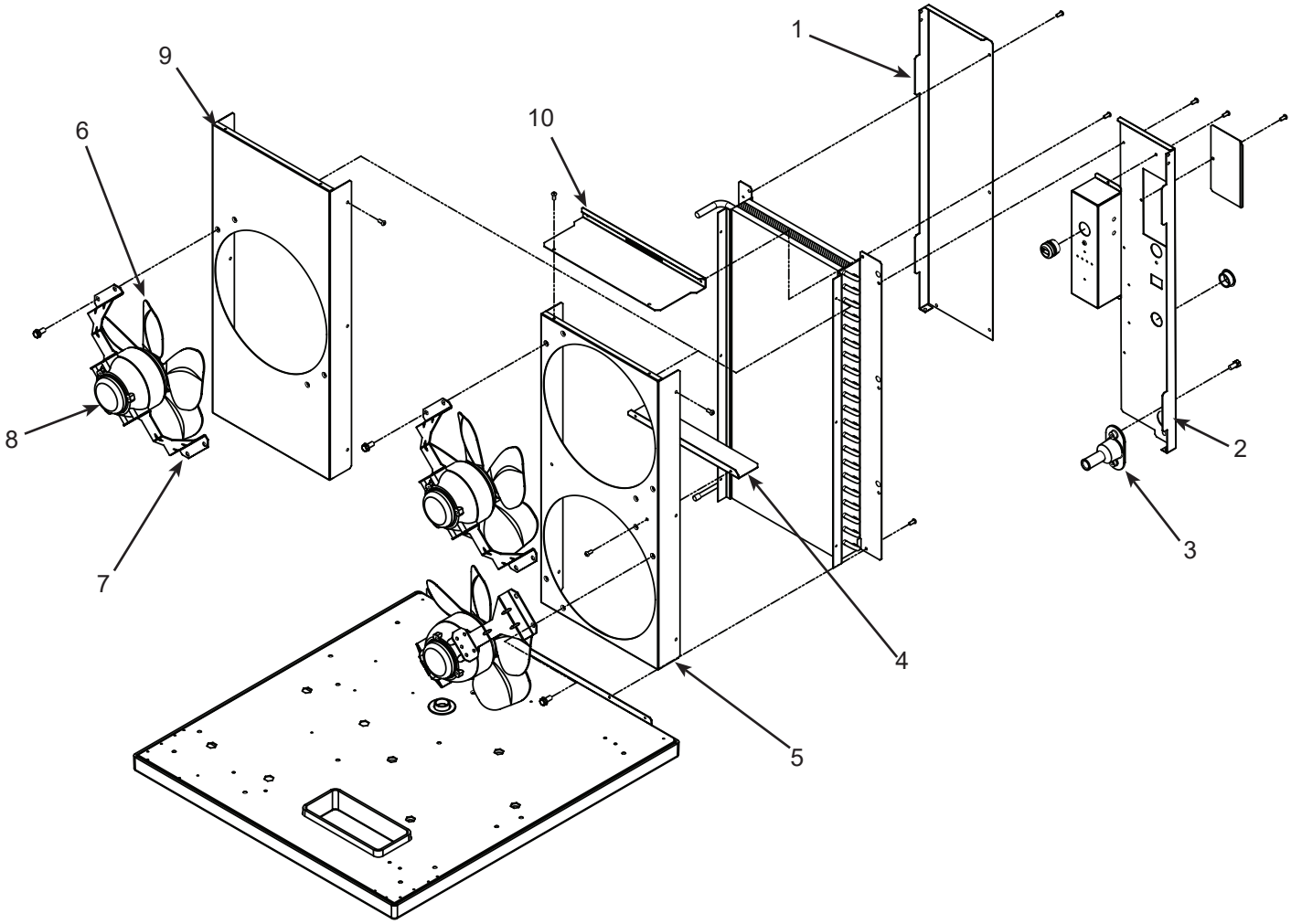

Item Number	Part Number	Description
1	A40651-001	Condenser flange
2	A41012-001	Condenser flange
3	02-3692-21	Drain fitting
4	A38675-001	Shroud divider
5	A39351-001	Shroud, N0622, F0822
6	18-8836-01	Fan blade
7	A38480-001	Bracket, fan motor
8	12-1681-23	Fan motor, 115 volt
	12-1681-04	Fan motor, 208-230 volt/50 or 60 Hz
9	A39350-001	Shroud, N0422, F0522
10	A39352-001	Shroud top

Service Parts

Condenser Fan Motor System - NH0922, NS0922, FS1222, NH1322, NS1322, FS1522

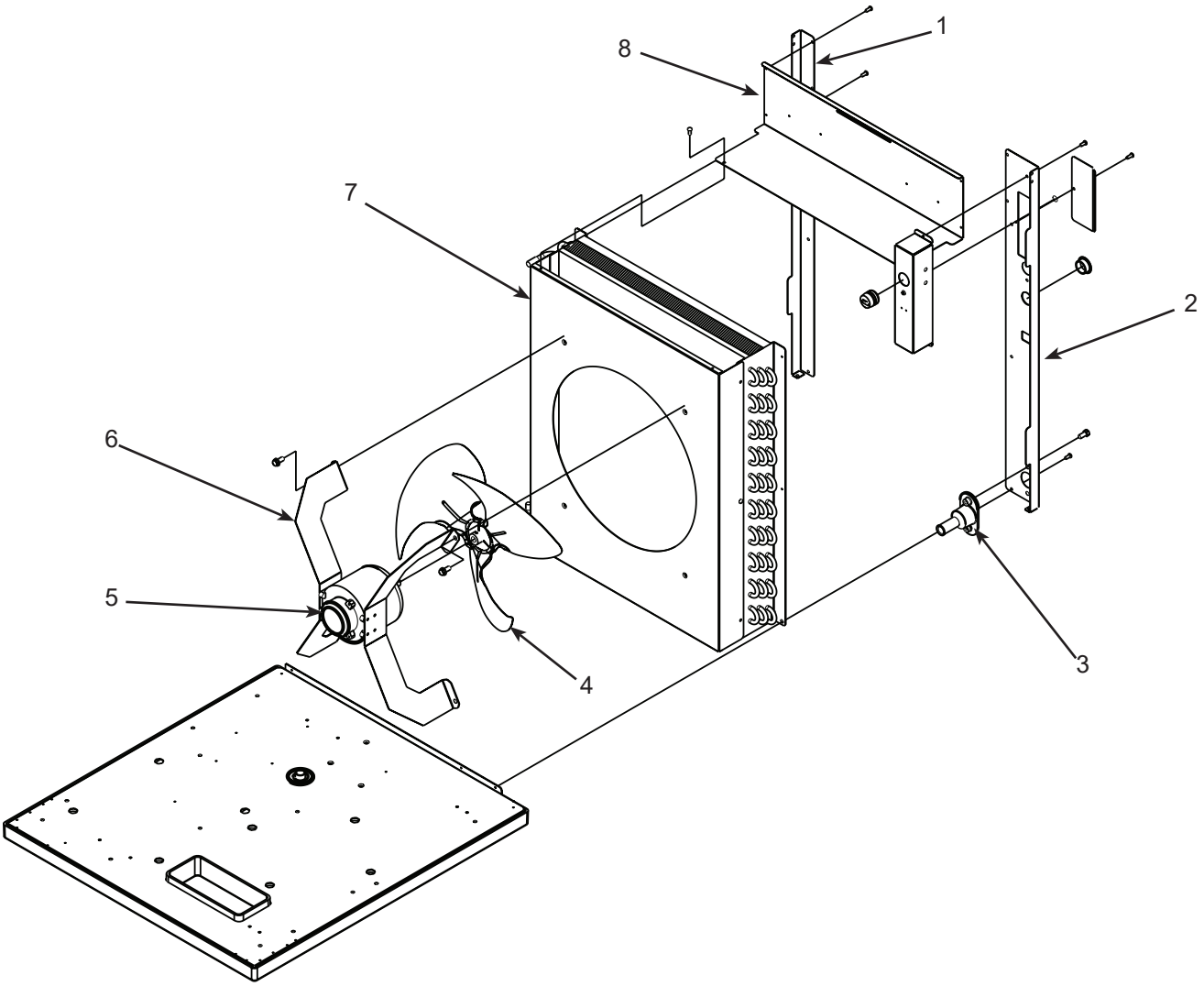

Item Number	Part Number	Description
1	A39188-001	Condenser flange
2	A41011-001	Condenser flange
3	02-3692-21	Drain fitting
4	18-8882-01	Fan blade
5	18-8927-01	230V Fan motor
5a	18-8926-01	115V Fan Motor
6	A40156-001	Bracket, fan motor
7	A39193-001	Shroud
8	A39353-001	Shroud top

Service Parts

Refrigeration Condensing, Water Cooled

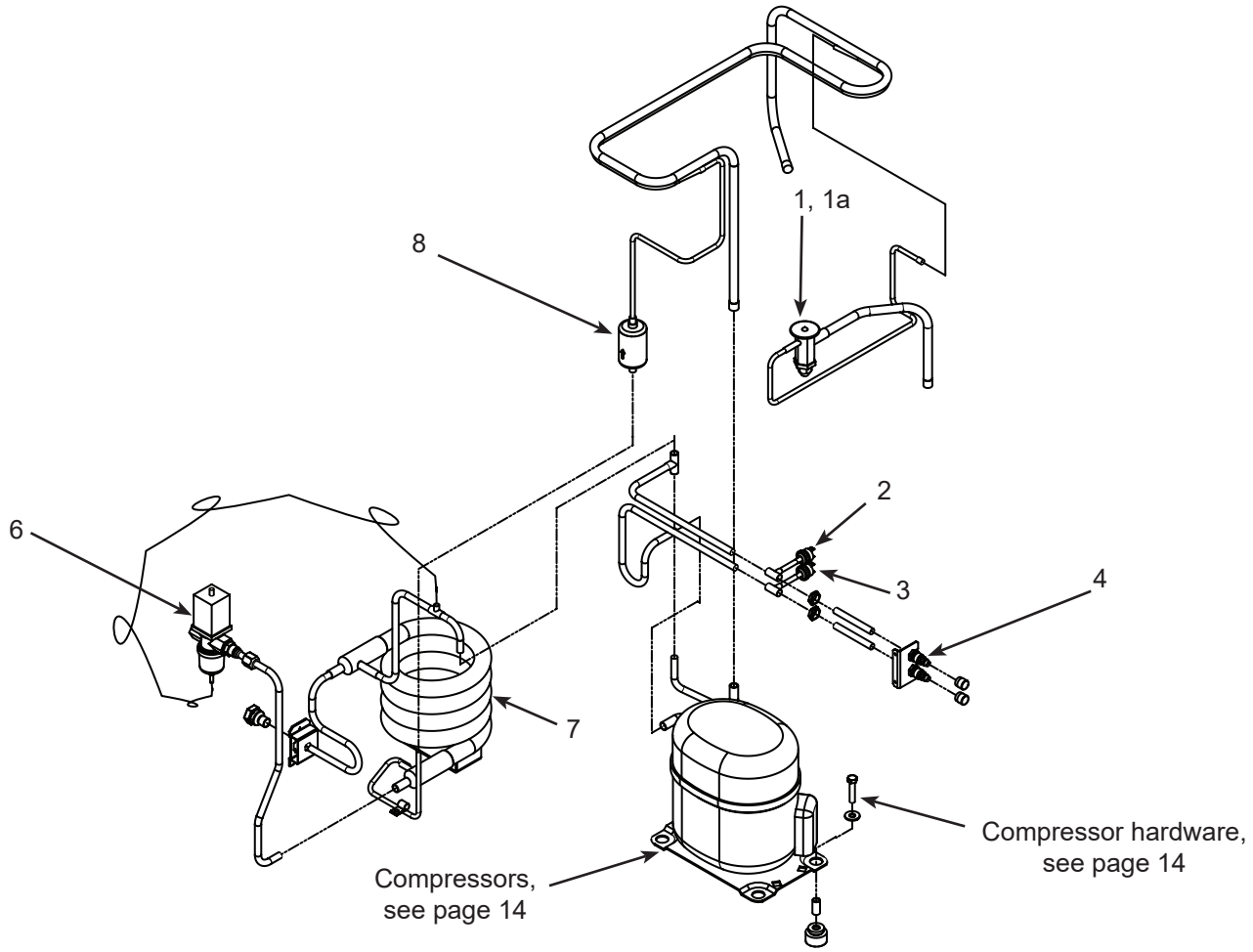

Item Number	Part Number	Description
1	16-1144-21	TXV, NH0422, NS0422, FS0522
	16-1144-22	TXV, NH0622, NS0622, FS0822
	16-1144-24	TXV, NH0922, NS0922, FS1222
	16-1144-23	TXV, NH1322, NS1322, FS1522
1a	19-0599-06	Insulation, TXV
2	11-0501-22	High pressure cut out sw
3	11-0502-21	Low pressure cut out sw
4	16-1137-01	Access valve seat
4a	16-1139-01	Access valve core
4b	16-1140-01	Access valve cap
5	16-1154-22	Condenser drain fitting
6	11-0608-24	Water regulating valve
7	18-8871-01	Condenser, water cooled fits NH0422, NS0422, FS0522, NH0622, NS0622, FS0822, NH0922, NS0922, FS1222
	18-8893-21	Condenser, water cooled fits NH1322, NS1322, and FS1522
	16-0874-01	Receiver, not shown, fits FS1222W or NS0922W
8	02-3319-01	Filter dryer

Service Parts

Refrigeration Condensing, Remote Cooled

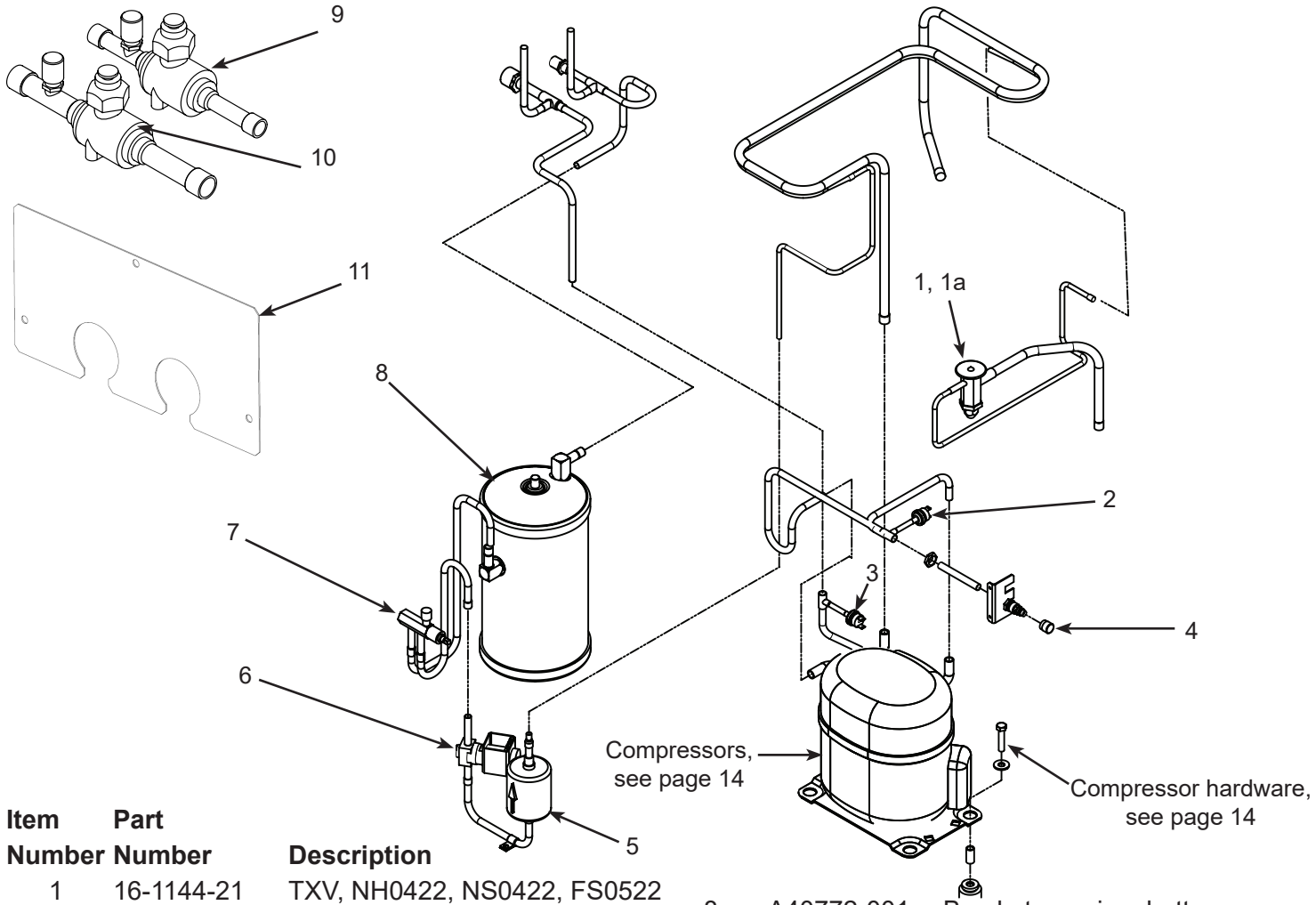

Item Number	Part Number	Description
1	16-1144-21	TXV, NH0422, NS0422, FS0522
	16-1144-22	TXV, NH0622, NS0622, FS0822
	16-1144-24	TXV, NH0922, NS0922, FS1222
	16-1144-23	TXV, NH1322, NS1322, FS1522
1a	02-4406-01	Insulation, TXV
2	11-0502-21	Low pressure cut out sw
3	11-0501-22	High pressure cut out sw
4	16-1137-01	Access valve seat
4a	16-1139-01	Access valve core
4b	16-1140-01	Access valve cap
5	02-3319-02	Filter dryer
6	11-0493-01	Liquid line solenoid valve, 208-230 volt, 50/60 Hz
	12-2719-22	230 volt coil
	11-0493-02	Liquid line solenoid valve, 115 volt
	12-2719-21	115 volt coil
	12-2733-30	LLV/HGV rebuild kit
7	16-1030-01	Receiver outlet valve
8	16-1176-01	Receiver
8	A40772-001	Bracket, receiver bottom
9	16-1208-01	Isolation valve 3/8
10	16-1208-02	Isolation valve 1/2
11	A40508-001	Isolation valves cover order 2
12	A40507-001	Isolation valves bracket

Service Parts

Remote Condenser - ERC111 or ERC311

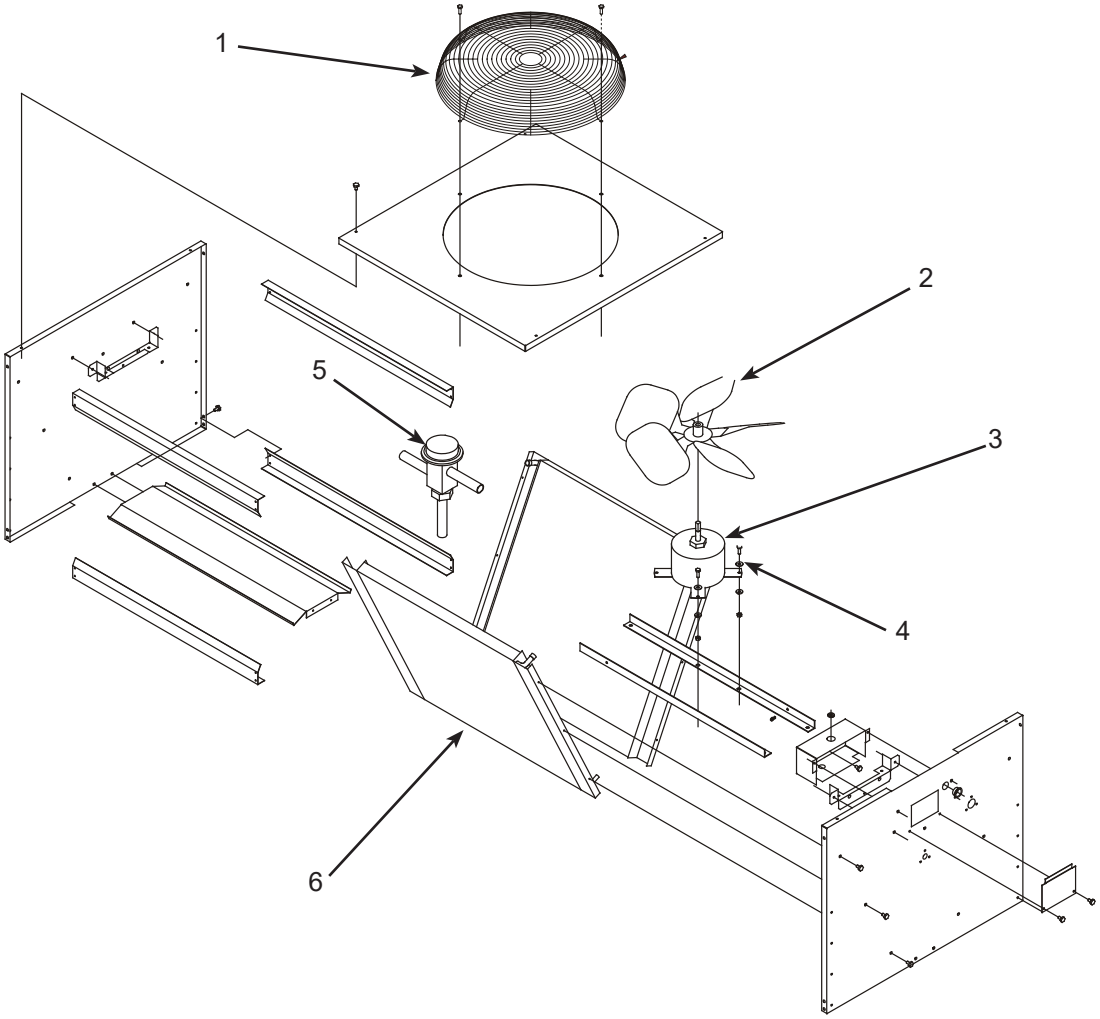

Item Number	Part Number	Description
1	02-3575-01	Fan guard
2	18-8816-01	Fan blade
3	12-2651-01	Fan motor - ERC311 (208-230 volt)
	12-2651-02	Fan motor - ERC111 (115 volt)
4	03-1405-08	Screw
5	11-0422-22	Headmaster
6	18-8827-01	Coil

Not shown:

NS1 A37169-001 Leg

NS2 A37170-001 Leg brace

NS3 03-1645-01 Screw for legs

NS4 16-1100-08 Line set tube end, discharge

NS5 16-1100-09 Line set tube end, liquid

Service Parts

Evaporator System, Hard Nugget (NH)

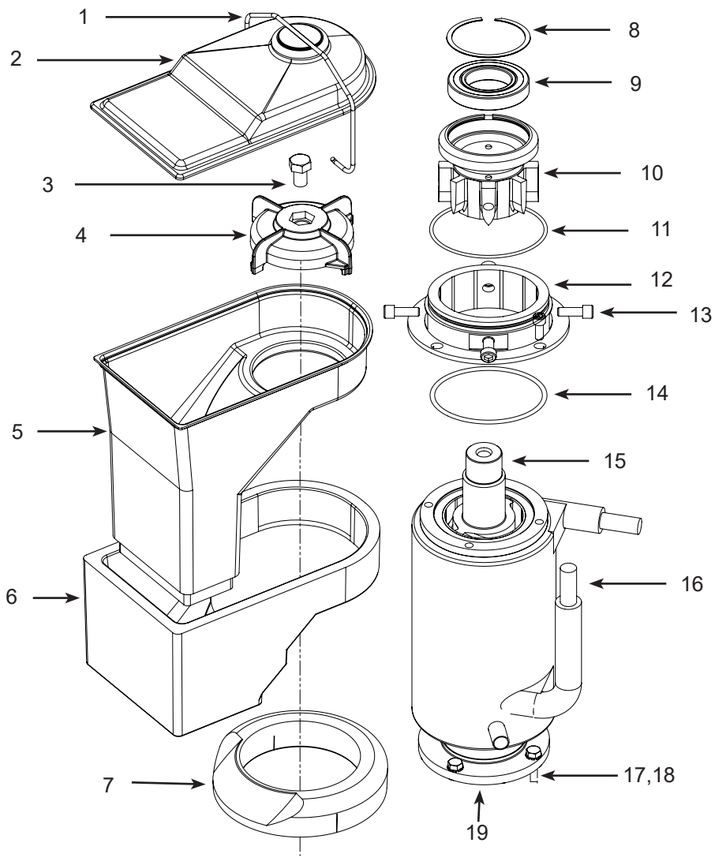

Hard Nugget:
NH0422, NH0622, NH0922, NH1322

Item Number	Part Number	Description
1	02-5074-01	Bail clamp
2	02-5073-01	Ice chute cover
3	03-1405-52	Hex head cap screw, 1/2”-13
4	02-5071-02	Ice sweep
5	02-5072-02	Ice chute for NH
6	02-5086-02	Ice chute insulation for NH
7	13-0929-03	Grey Insulation collar
8	02-5070-01	Retaining ring
9	02-5069-01	Top bearing
10	02-5050-01	Extruder
10a	A40991-023	Extruder/Bearing assembly kit (includes 8,9,10)
11	13-0617-52	O-ring
12	02-5049-01	Extruder adapter
13	03-1544-08	Allen head screw, 5/16-18x3/4”
14	13-0617-45	O-ring
15	02-5060-01	Auger Short- NH0422, NH0622
	02-5060-02	Auger Tall - NH0922, NH1322
16	02-5061-21	Evaporator Short - NH0422, NH0622
	02-5061-22	Evaporator Tall - NH0922, NH1322
17	03-1417-13	Lock washer 5/16”
18	03-1405-38	Hex head cap screw, 5/16-18x3/4”
19	A40174-001	Evaporator/Gearbox adapter assembly
19a	02-4843-23	Lower Bearing
NS1	02-0929-23	Water Seal
NS2	A40991-033	Conversion to hard nugget (includes 4,5,6,7,8,9,10,11,12,13,14)

Evaporator System, Soft Nugget (NS)

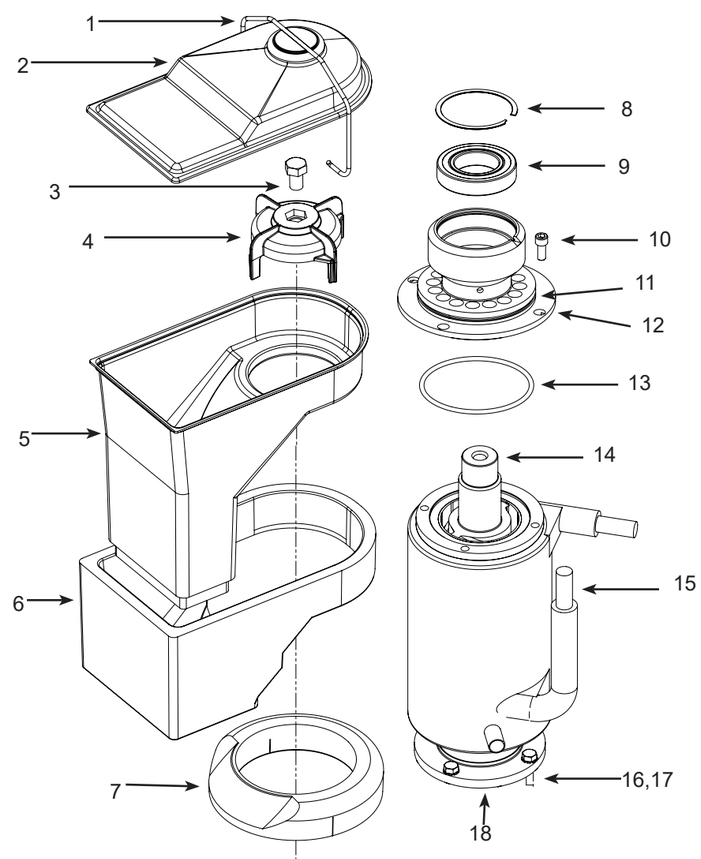

Soft Nugget:
NS0422, NS0622, NS0922, NS1322

Item Number	Part Number	Description
1	02-5074-01	Bail clamp
2	02-5073-01	Ice chute cover
3	03-1405-52	Hex head cap screw, 1/2”-13
4	02-5071-01	Ice sweep
5	02-5072-01	Ice chute
6	02-5086-01	Ice chute insulation
7	13-0929-02	Black Insulation collar
8	02-5070-01	Retaining ring
9	02-5069-01	Top bearing
10	03-1544-08	Allen head screw, 5/16-18x3/4”
11	13-0617-52	O-ring
12	02-5067-01	Extruder
12a	A40991-021	Extruder/Bearing assembly kit (includes 8,9,11,12,13)
13	13-0617-45	O-ring
14	02-5060-01	Auger Short - NS0422, NS0622
	02-5060-02	Auger Tall - NS0922, NS1322
15	02-5061-21	Evaporator Short - NS0422, NS0622
	02-5061-22	Evaporator Tall - NS0922, NS1322
16	03-1417-13	Lock washer 5/16”
17	03-1405-38	Hex head cap screw, 5/16-18x3/4”
18	A40174-001	Evaporator/Gearbox adapter assembly
18a	02-4843-23	Lower Bearing
NS1	02-0929-23	Water Seal
NS2	A40991-031	Conversion to soft nugget kit (includes 4,5,6,7,8,9,11,12,13)

Evaporator System, Flaker (FS)

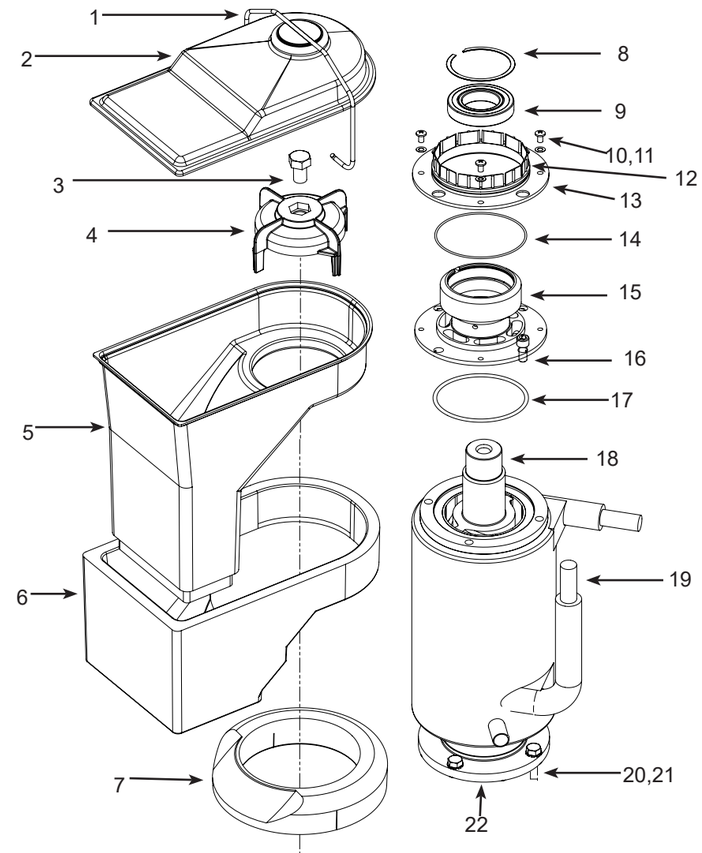

Flaker
FS0522, FS0822, FS1222, FS1522

Item Number	Part Number	Description
1	02-5074-01	Bail clamp
2	02-5073-01	Ice chute cover
3	03-1405-52	Hex head cap screw, 1/2”-13
4	02-5071-01	Ice sweep
5	02-5072-01	Ice chute
6	02-5086-01	Ice chute insulation
7	13-0929-01	White Insulation collar
8	02-5070-01	Retaining ring
9	02-5069-01	Top bearing
10	03-1408-36	Washer
11	03-1403-27	Screw #10-24
12	13-0617-52	O-ring
13	02-2916-01	Slotted collar
14	13-0617-49	O-ring
15	02-5068-01	Extruder
15a	A40991-022	Extruder/Bearing Assembly Kit (includes 8,9,15,17)
16	03-1544-08	Allen head screw, 5/16-18x3/4”
17	13-0617-45	O-ring
18	02-5060-01	Auger Short- FS0522, FS0822
	02-5060-02	Auger Tall - FS1222, FS1522
19	02-5061-21	Evaporator Short - FS0522, FS0822
	02-5061-22	Evaporator Tall - FS1222, FS1522
20	03-1417-13	Lock washer 5/16”
21	03-1405-38	Hex head cap screw, 5/16-18x3/4”
22	A40174-001	Evaporator/Gearbox adapter assembly
22a	02-4843-23	Lower Bearing
NS1	02-0929-23	Water Seal
NS2	A40991-032	Conversion to flaker kit (includes 4,5,6,7,8,9,10,11,12,13,14,15,17)

Service Parts

Gear Reducer and Motor

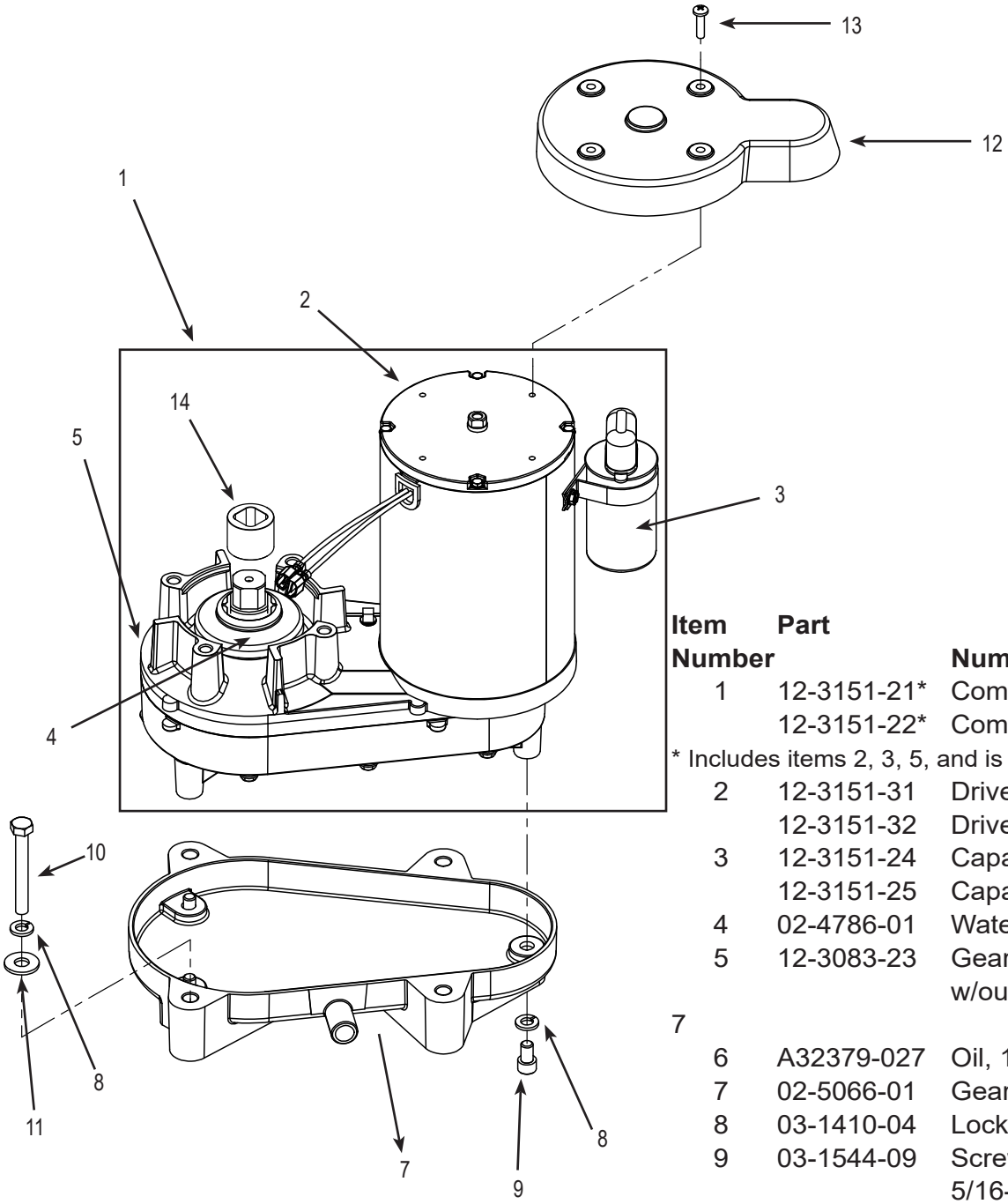

Oil Charge is 14 Oz.

Item Number	Part Number	Description
1	12-3151-21*	Complete assy 115V
	12-3151-22*	Complete assy 208-230V

* Includes items 2, 3, 5, and is charged with gear oil.

2	12-3151-31	Drive motor, 115V
	12-3151-32	Drive Motor, 208-230V
3	12-3151-24	Capacitor kit, 115V
	12-3151-25	Capacitor kit, 208-230V
4	02-4786-01	Water Shed
5	12-3083-23	Gearbox kit, assembled w/out motor, includes item 7
6	A32379-027	Oil, 1 Container
7	02-5066-01	Gearbox drip pan
8	03-1410-04	Lock washer 5/16”
9	03-1544-09	Screw, socket head cap, 5/16-18 x 1-1/2”
10	03-1405-22	Screw, hex Cap, 5/16-18 x 1-1/2”
11	03-1407-07	Flat Washer 5/16”
12	02-5104-01	Motor Shield
13	03-1403-32	Screw, #10-24 x 3/4”
14	02-4838-01	Drive coupling

Not Shown:

15	12-3151-33	First Gear (Phenolic)
16	12-3151-34	Gasket

Service Parts

Electrical & Control Box

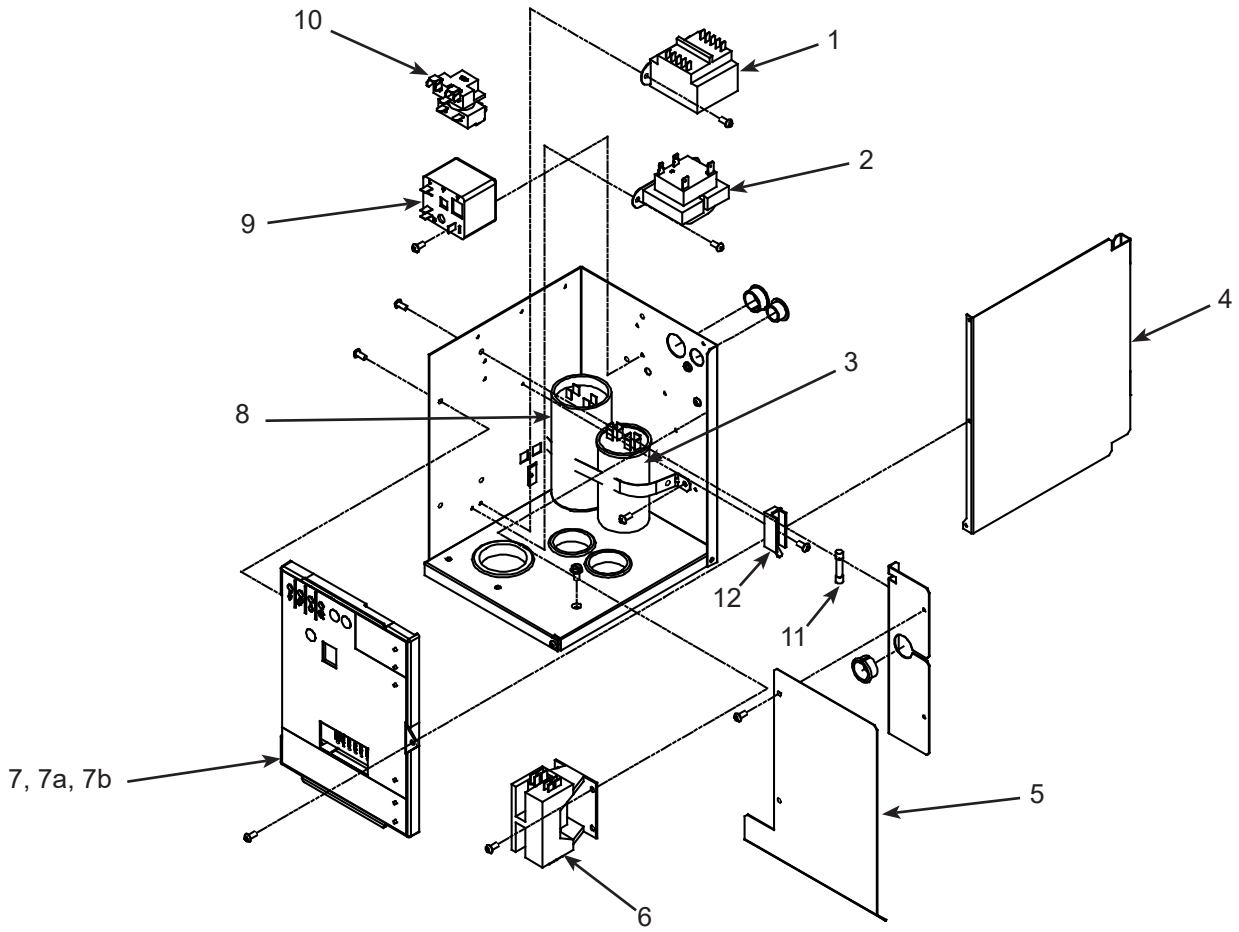

Item Number	Part Number	Description
1	12-2639-01	Transformer, 50 Hz
2	12-2924-01	Transformer, 115 v
	12-2924-02	Transformer, 208-230 60 Hz
3	see page 15	Run capacitor
4	A39198-001	Side cover
5	A39216-001	Shield
6	12-2469-03	Contactor, 115 volt
	12-2469-02	Contactor, 208-230 volt 60 Hz, single phase
	12-2533-02	Contactor, 3 phase
7	11-0623-51	A Series Controller
	11-0623-61	B Series Controller
7a	02-4407-01	Graphic overlay
7b	02-4076-01	Control box door
8	see next page	Start capacitor
9	see next page	Potential relay
10	see next page	Start relay
11	12-2686-01	Fuse, 50 Hz only
12	12-2687-01	Fuse block, 50 Hz only

Harnesses (not shown)
NS1 12-2976-01 Low voltage harness
NS2 12-3156-01 High voltage harness, AW
NS3 12-3157-01 High voltage harness, Rem
NS4 12-2936-01 High voltage harness, dual fan motor

Service Parts

Compressors

Model	Series	Electrical	Compressor	Overload	Relay	Start Cap	Run Cap
NH0422, NS0422, FS0522 -1	A	115/60/1	18-8929-21	18-8929-23	18-1903-64	18-1901-63	not used
NH0622, NS0622, FS0822 -1	A	115/60/1	18-8949-21	Internal	18-1903-44	18-1901-65	18-1902-64
NH0622, NH0622, FS0822 -32	A	208-230/60/1	18-8949-22	18-8949-51	18-1903-54	18-1901-66	18-1902-30
NS0622 -6	A	230/50/1	18-8949-23	18-8949-52	18-1903-70	18-1901-52	18-1902-66
NH0922, NS0922 -1	A	115/60/1	18-8955-21	Internal	18-1903-78	18-1901-69	18-1902-71
NH0922, NS0922, FS1222 -32	A	208-230/60/1	18-8955-22	Internal	18-1903-54	18-1901-20	18-1902-67
NH0922, NS0922, FS1222 -3	A	208-230/60/3	18-8955-23	18-8955-53	-	-	-
NS0922, FS1222 -6	A	230/50/1	18-8990-26	Internal	18-1903-71	-	-
NH1322, NS1322, FS1522 -32	A	208-230/60/1	18-8749-22	Internal	18-1903-46	18-1901-48	18-1902-70
NH1322, NS1322, FS1522 -3	A	208-230/60/3	18-8749-24	Internal	-	-	-

Compressor Mounting Hardware

Model	Series	Bolt	Grommet	Washer	Sleeve
NH0422, NS0422, FS0522	A	03-1405-20	18-4700-28	03-1407-07	18-0108-41
NH0622, NS0622, FS0822	A	03-1405-20	18-2200-28	03-1407-07	18-2200-27
NH0922, NS0922, FS1222	A	03-1405-20	18-2200-28	03-1407-07	18-2200-27
NH1322, NS1322, FS1522	A	03-1405-20	18-2300-27	03-1407-07	18-2300-26

Crankcase Heaters

Model	Series	Voltage	Heater
NH0622R-1, NS0622R-1, FS0822R-1	A	115	12-3043-01
NH0922R-1, NS0922R-1	A	115	12-3043-01
NH0922R-32, NS0922R-32, FS1222R-32	A	230	12-3043-02
FS1222R-3	A	230, 3 phase	12-3043-02
NH1322R-32, NS1322R-32, FS1522R-32	A	230	12-3043-03

Service Parts

Wiring Diagram - NH0422, NS0422, and FS0522 - Air/Water Single Phase (-1)

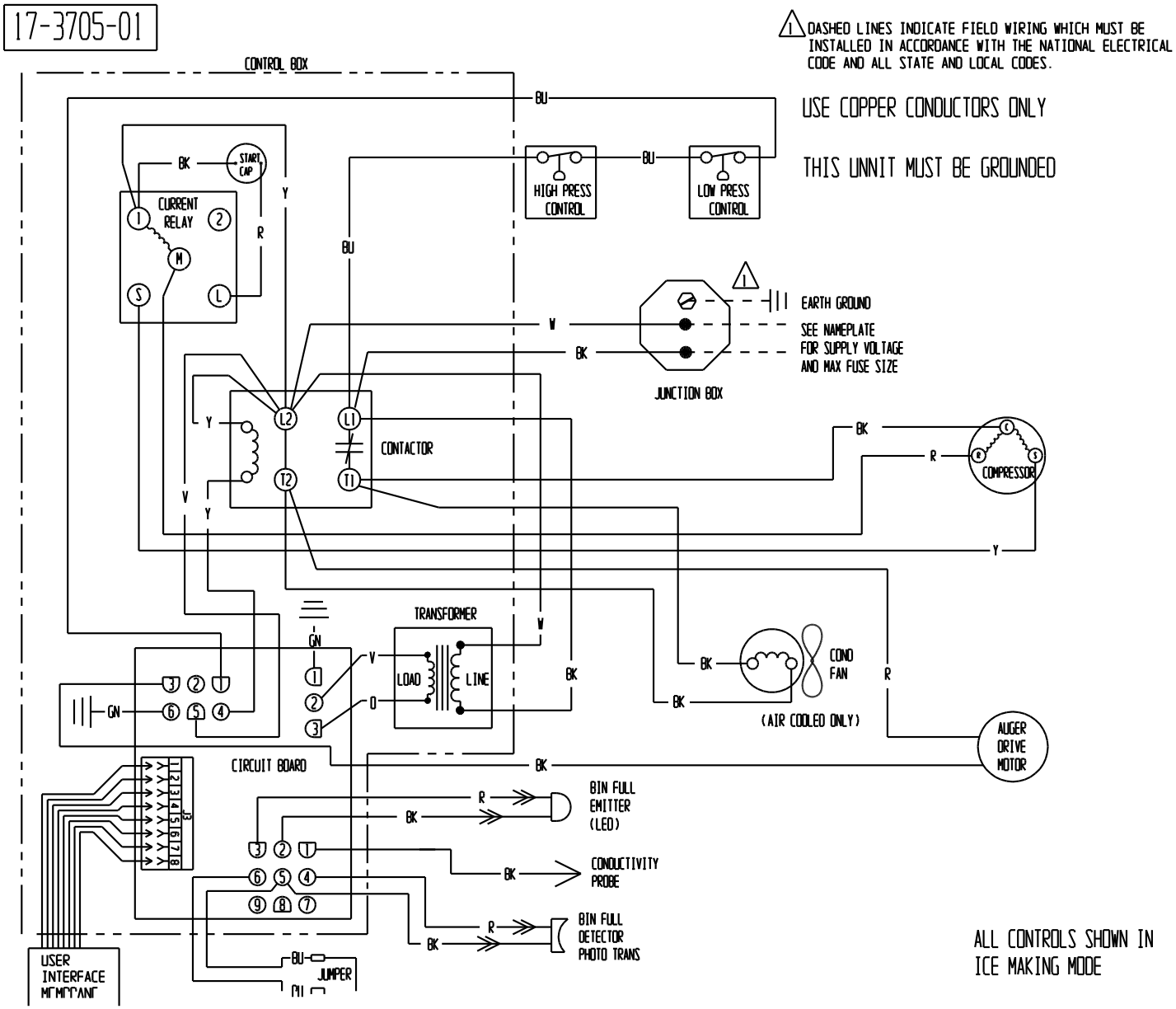

Service Parts

Schematic Diagram - NH0422, NS0422, and FS0522 - Air/Water Single Phase (-1)

CAUTION:
MORE THAN ONE DISCONNECT MEANS MAY BE
REQUIRED TO DISCONNECT ALL POWER TO THIS UNIT.

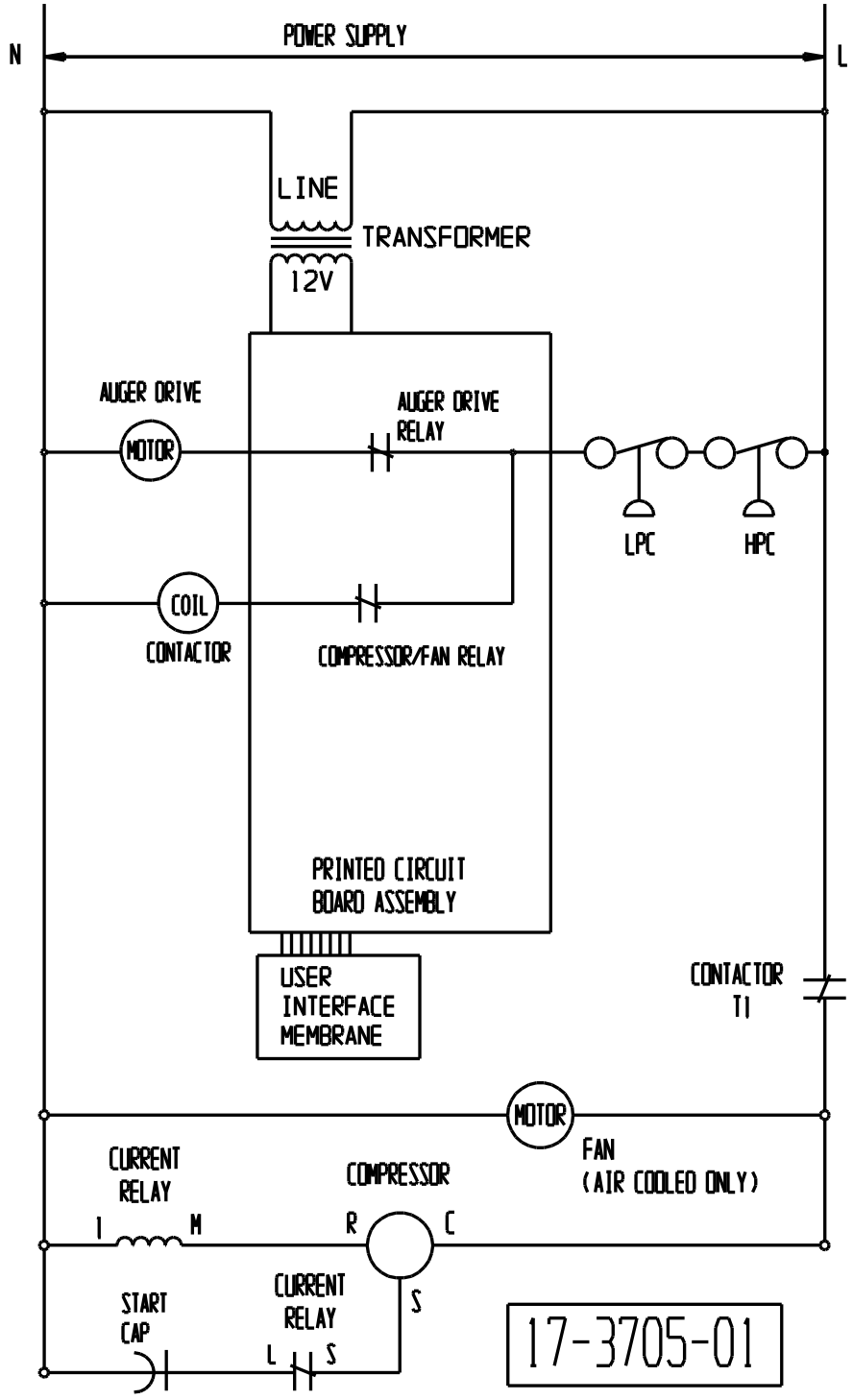

Service Parts

Wiring Diagram - NH0622, NS0622, FS0822, NH0922, NS0922, FS1222, NH1322, NS1322, and FS1522 - Air/Water Single Phase (-1 and -32)

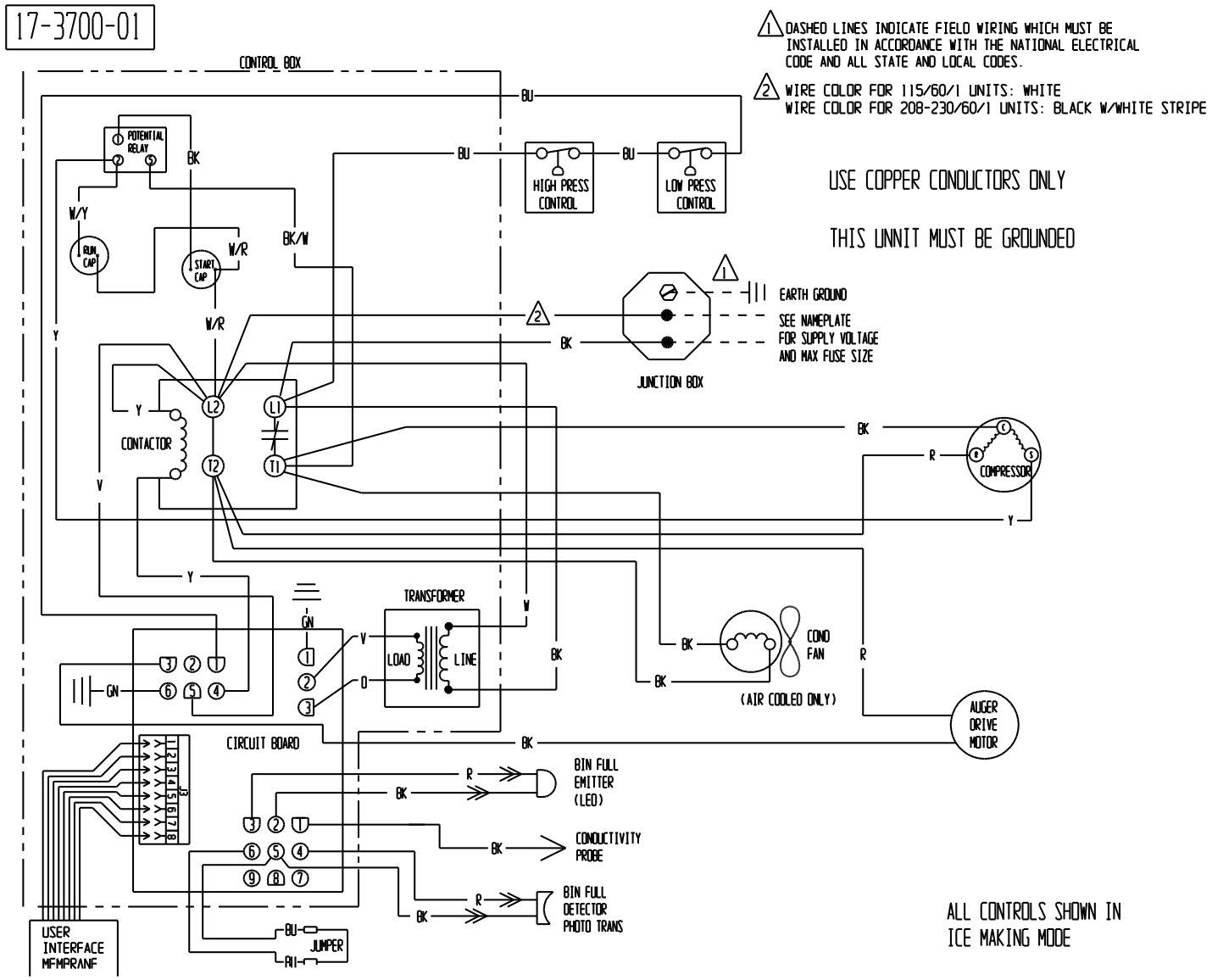

Service Parts

Schematic Diagram - NH0622, NS0622, FS0822, NH0922, NS0922, FS1222, NH1322, NS1322, and FS1522 - Air/Water Single Phase (-1 and -32)

CAUTION:
MORE THAN ONE DISCONNECT MEANS MAY BE
REQUIRED TO DISCONNECT ALL POWER TO THIS UNIT.

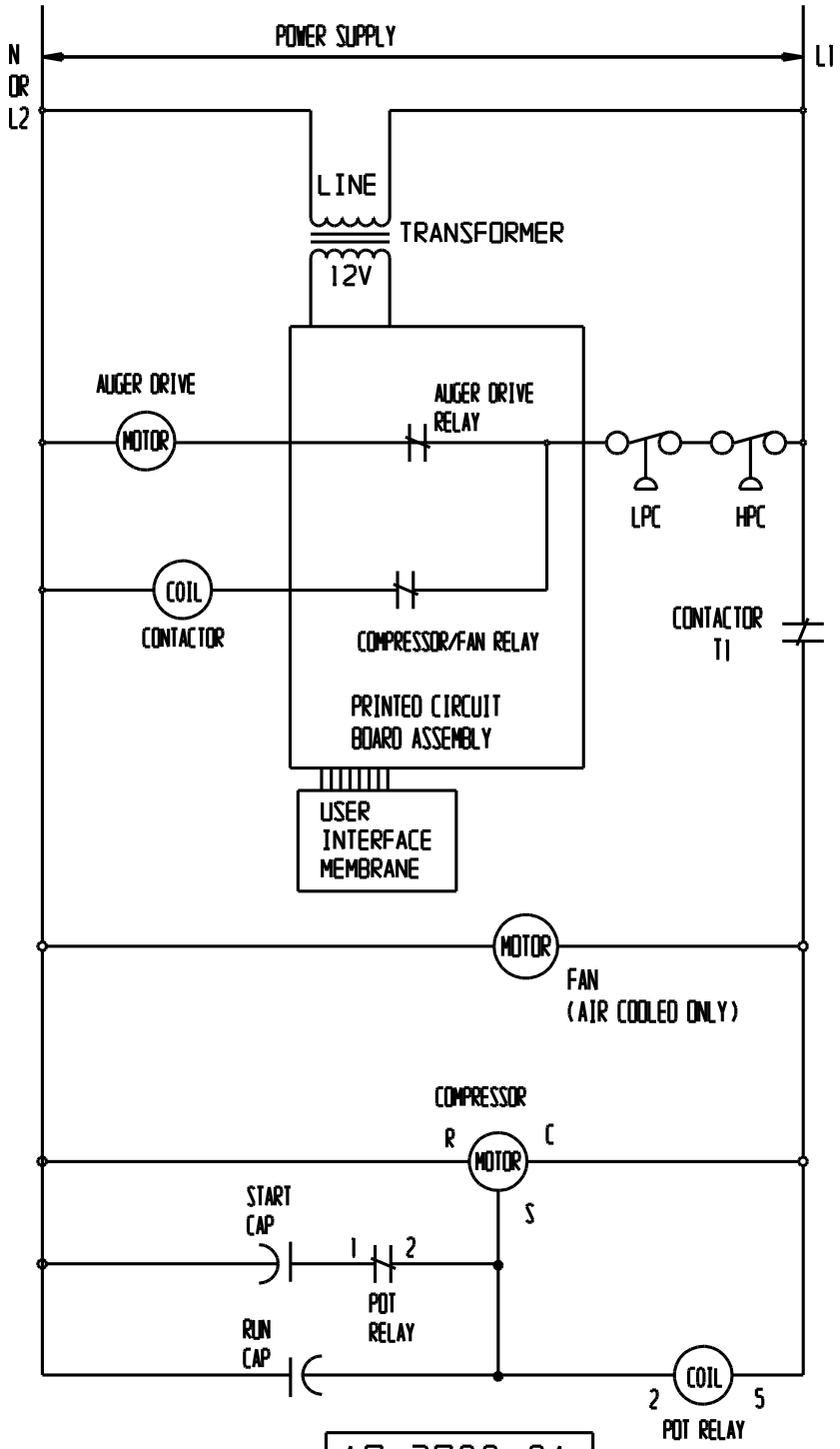

17-3700-01

Service Parts

Wiring Diagram - NS0922, FS1222, NH1322, NS1322 - Air/Water Three Phase (-3)

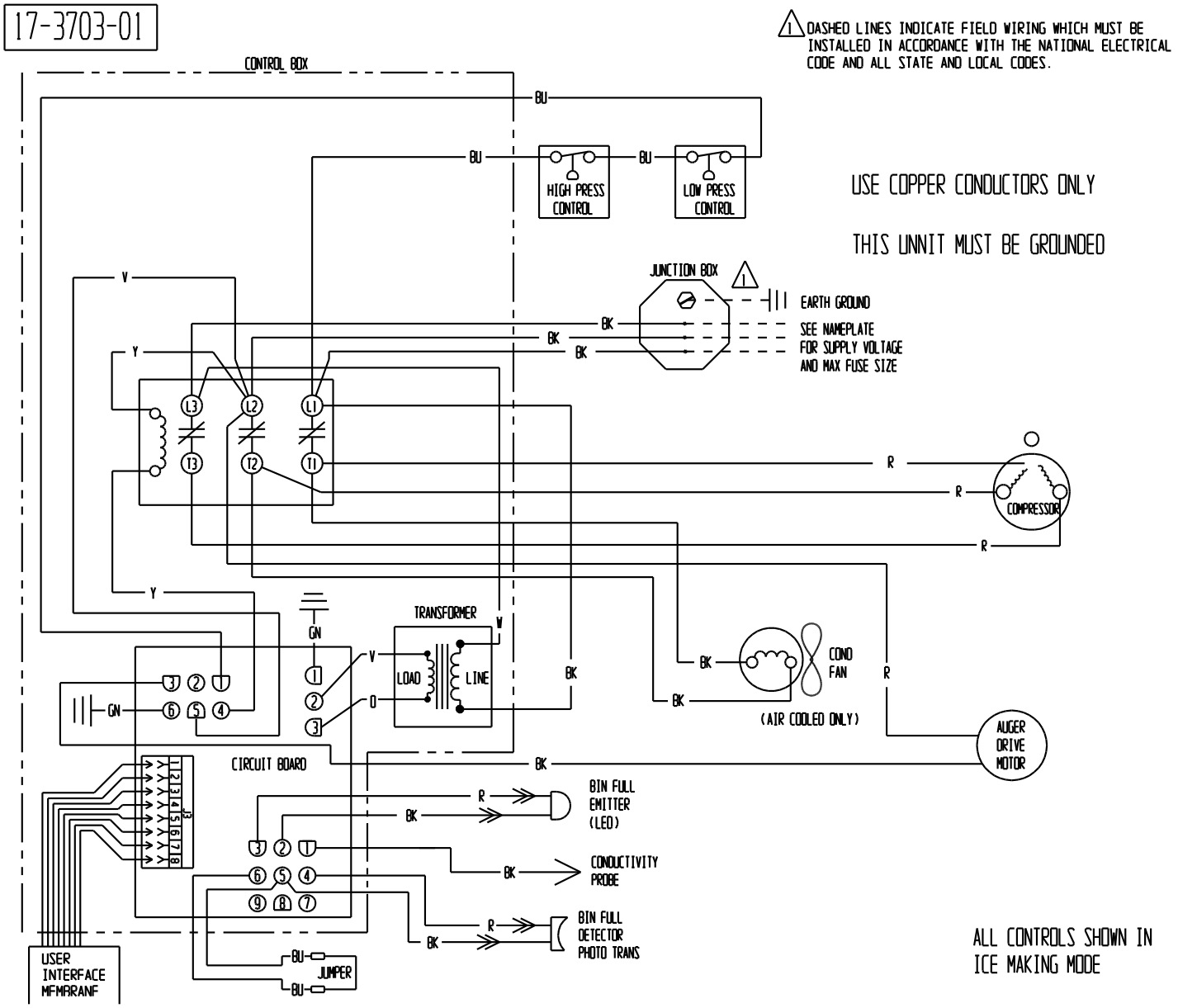

Service Parts

Schematic Diagram - NS0922, FS1222, NH1322, NS1322 - Air/Water Three Phase (-3)

CAUTION:
MORE THAN ONE DISCONNECT MEANS MAY BE
REQUIRED TO DISCONNECT ALL POWER TO THIS UNIT.

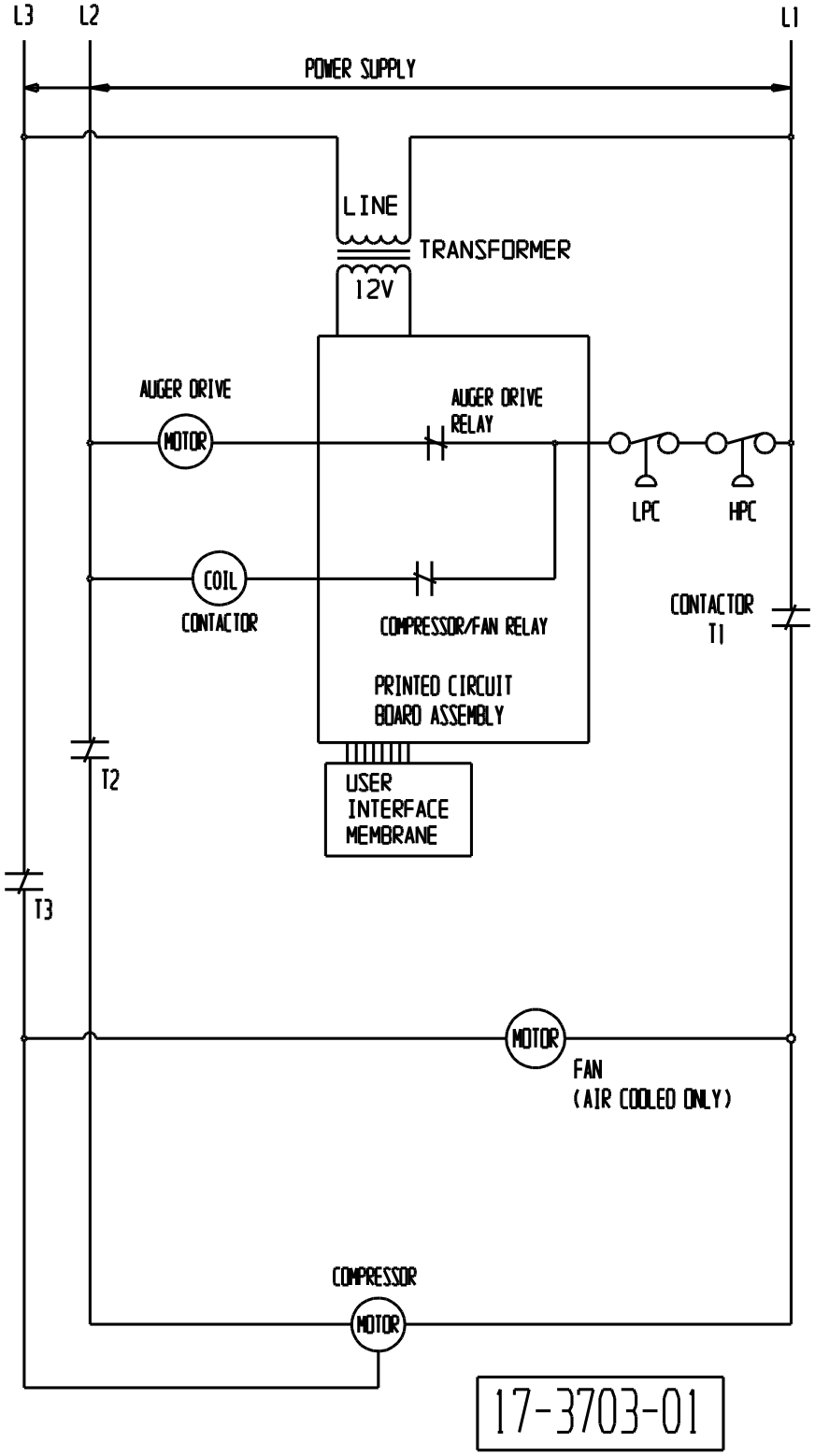

Service Parts

Wiring Diagram - NH0622, NS0622, FS0822, NH0922, NS0922, FS1222, NH1322, NS1322 - Remote Single Phase (-1 and -32)

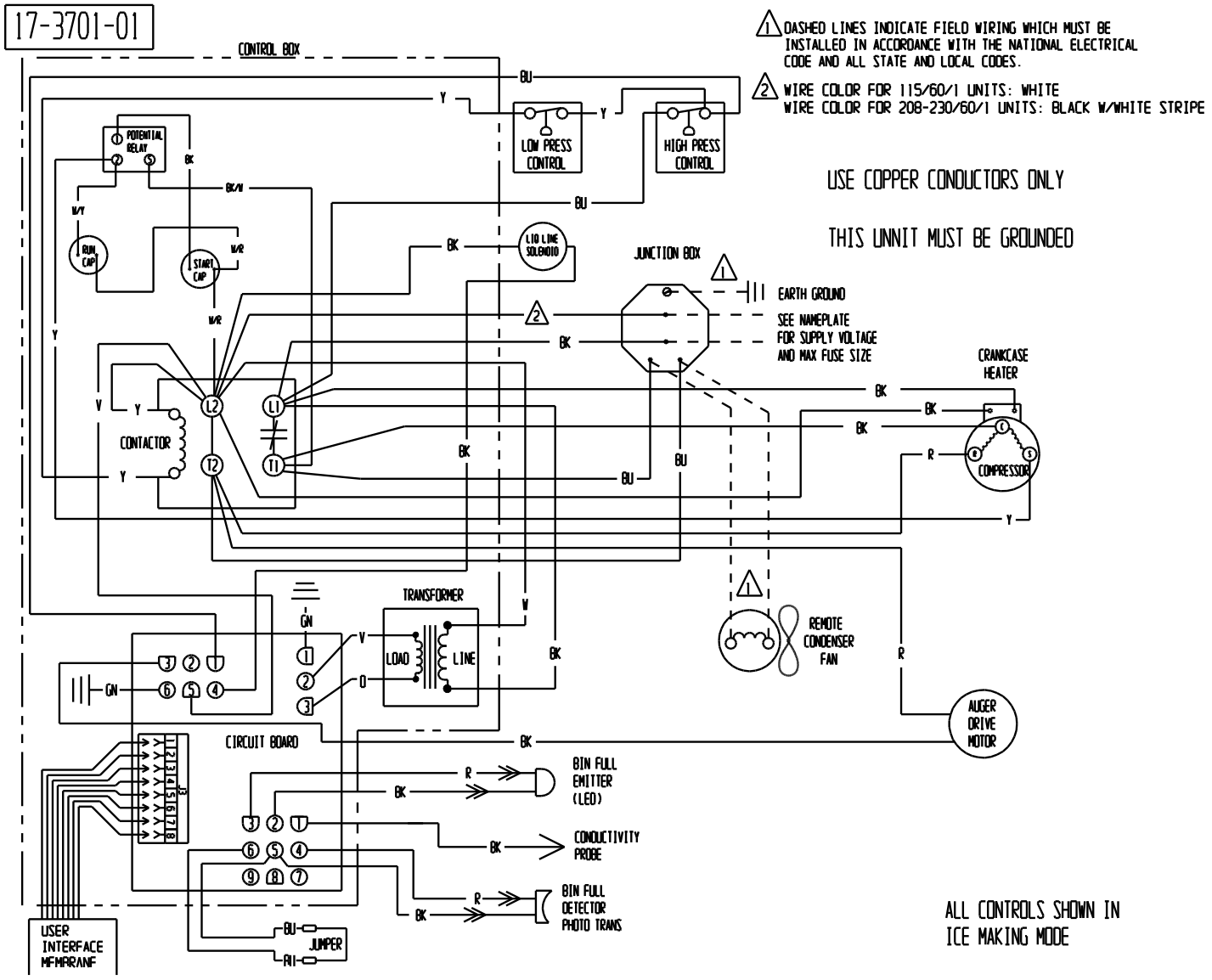

Service Parts

Schematic Diagram - NH0622, NS0622, FS0822, NH0922, NS0922, FS1222, NH1322, NS1322 - Remote Single Phase (-1 and -32)

CAUTION:
MORE THAN ONE DISCONNECT MEANS MAY BE REQUIRED TO DISCONNECT ALL POWER TO THIS UNIT.

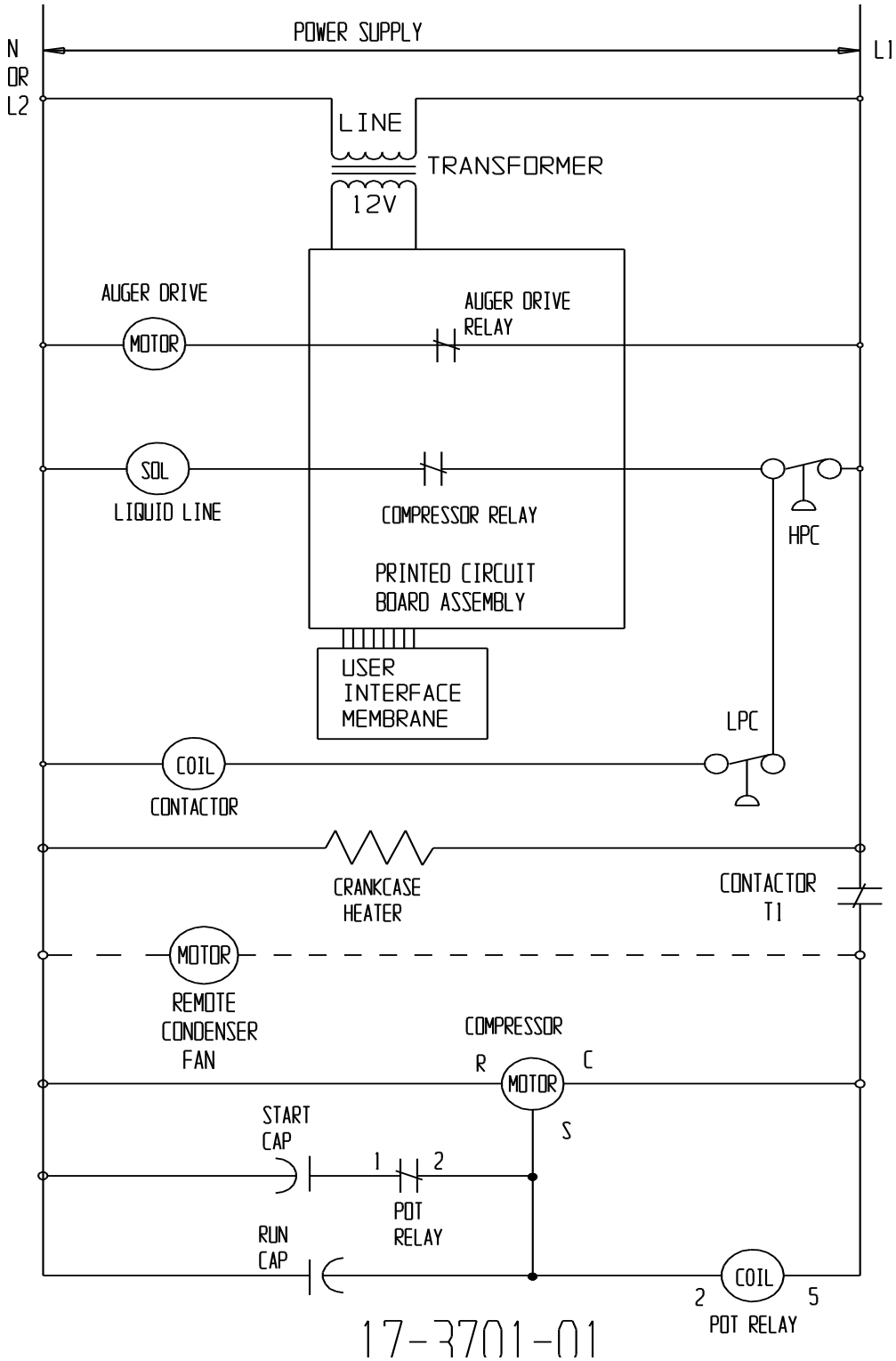

17-3701-01

Service Parts

Wiring Diagram - FS1222 - Remote Three Phase (-3)

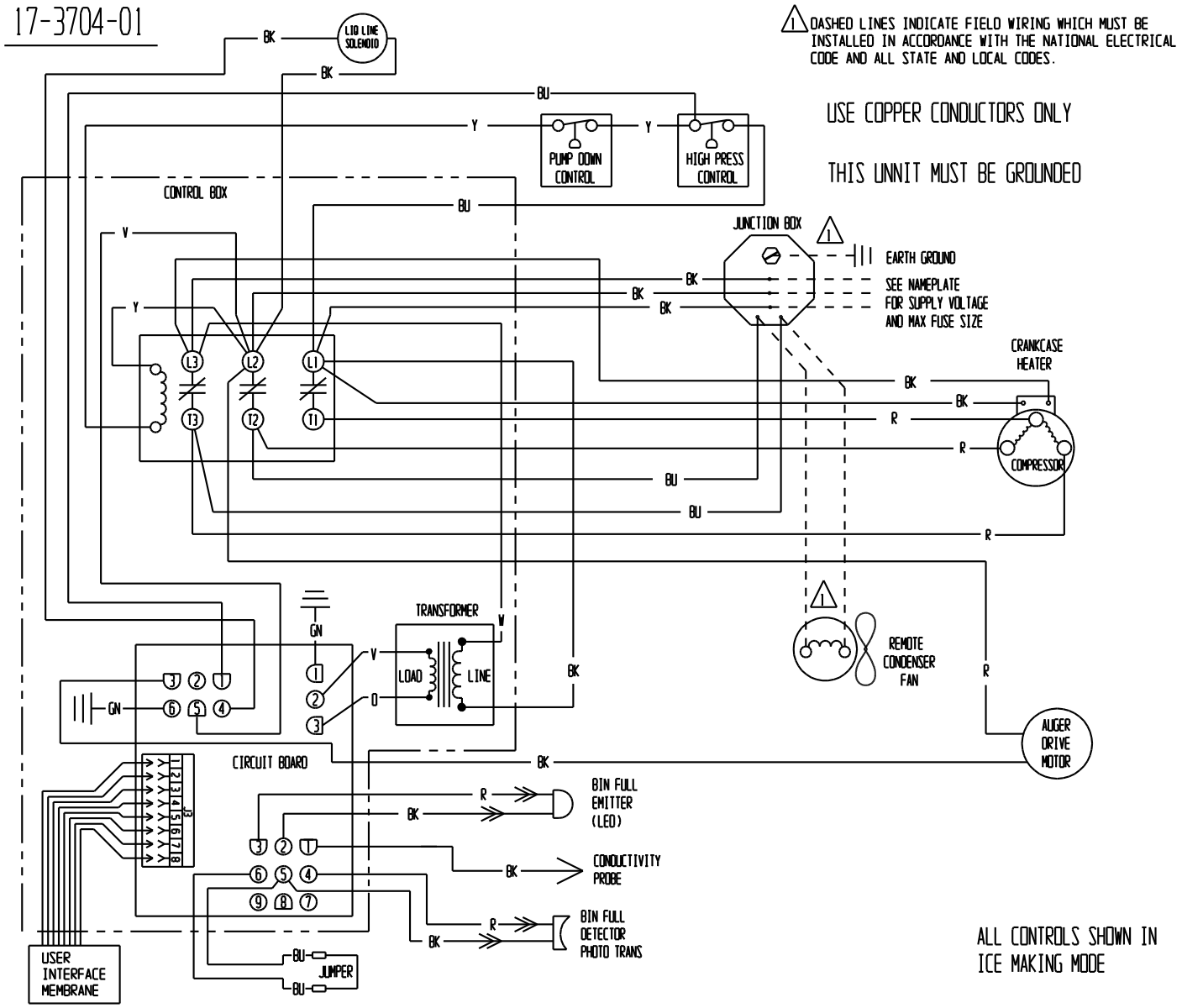

Service Parts

Schematic Diagram - FS1222 - Remote Three Phase (-3)

CAUTION:
MORE THAN ONE DISCONNECT MEANS MAY BE
REQUIRED TO DISCONNECT ALL POWER TO THIS UNIT.

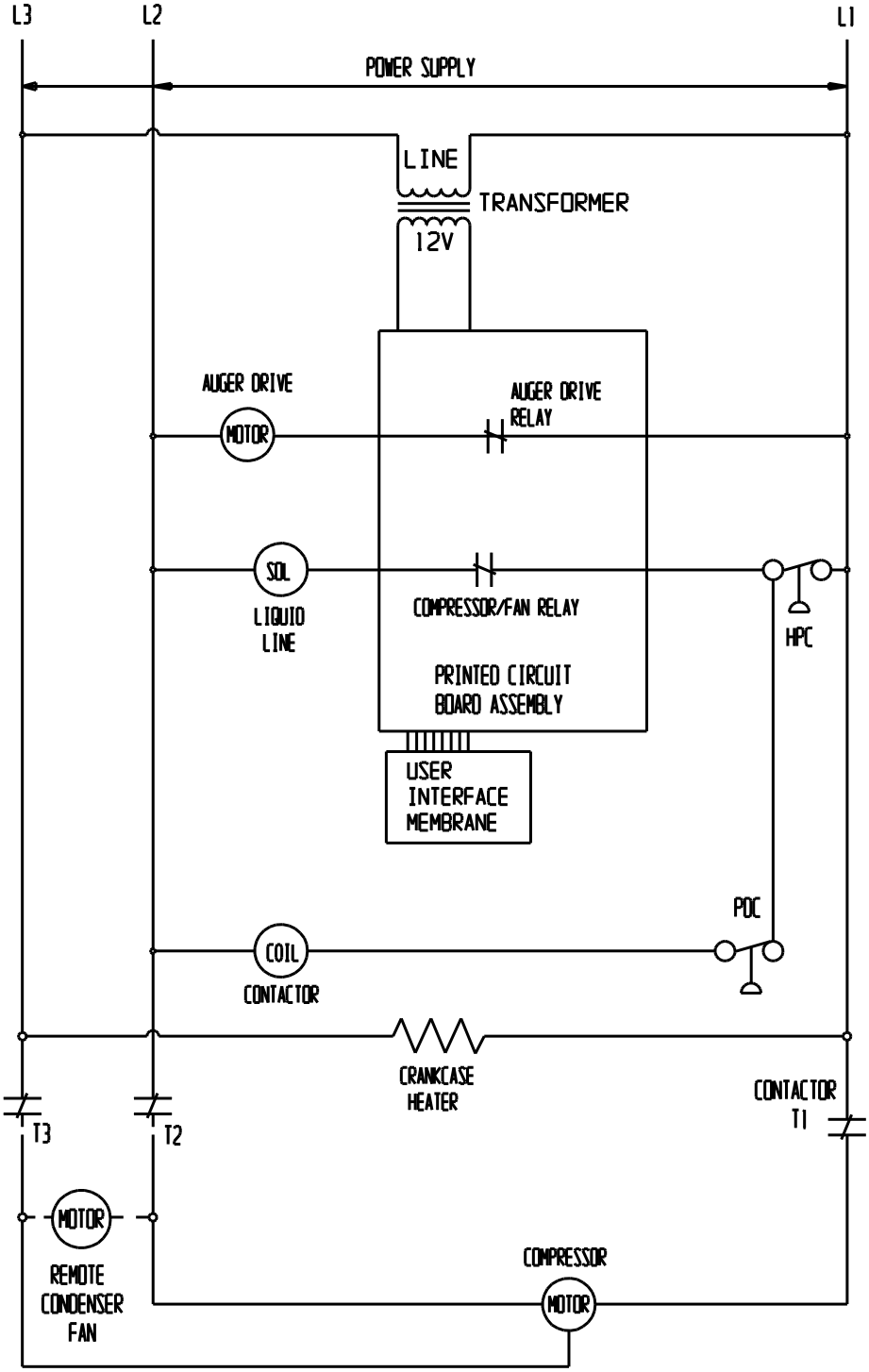

17-3704-01

Service Parts

Wiring Diagram - NS0622, NS0922, FS1222 - Air 50 Hz (-6)

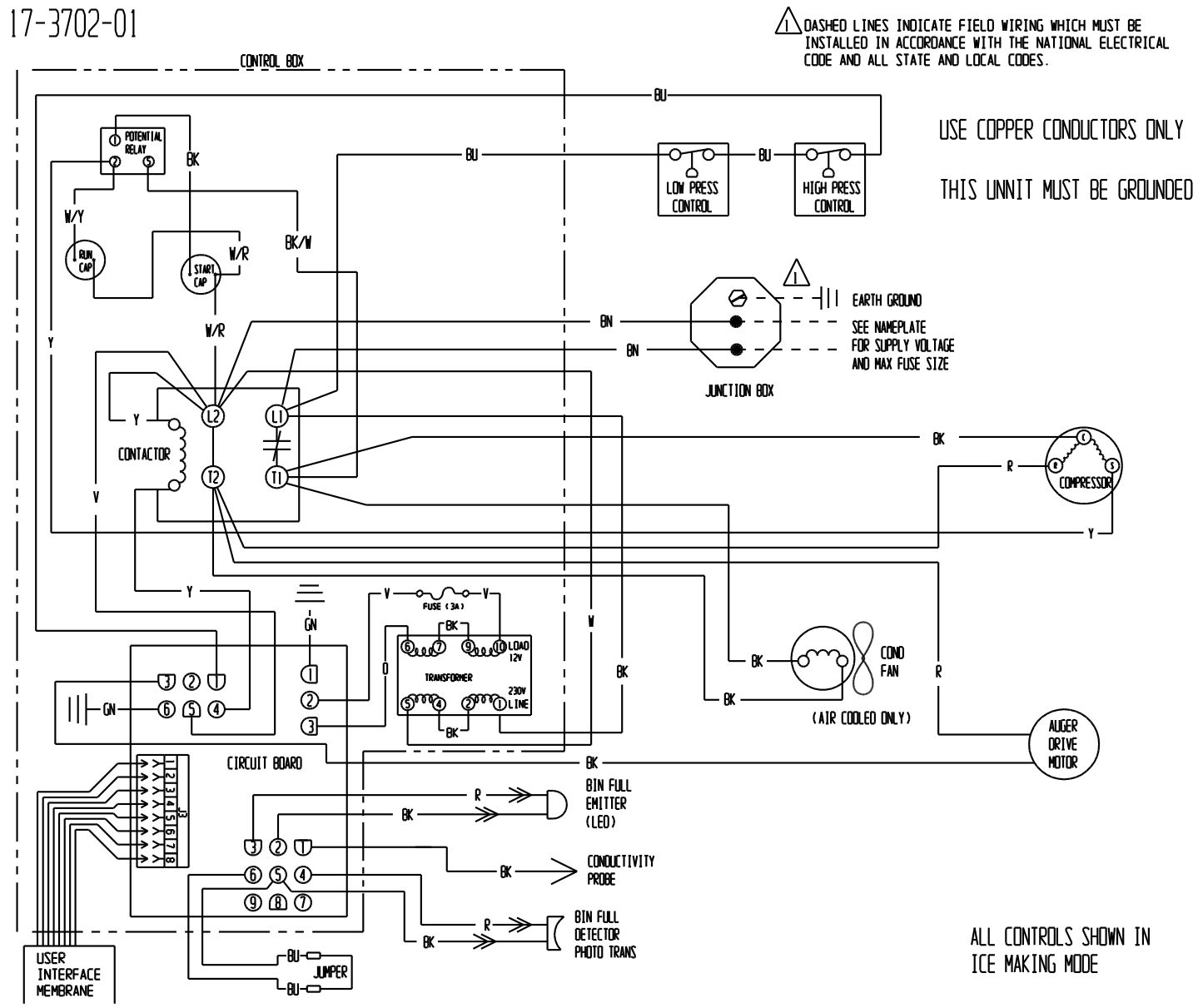

Service Parts

Schematic Diagram - NS0622, NS0922, FS1222 - Air 50 Hz (-6)
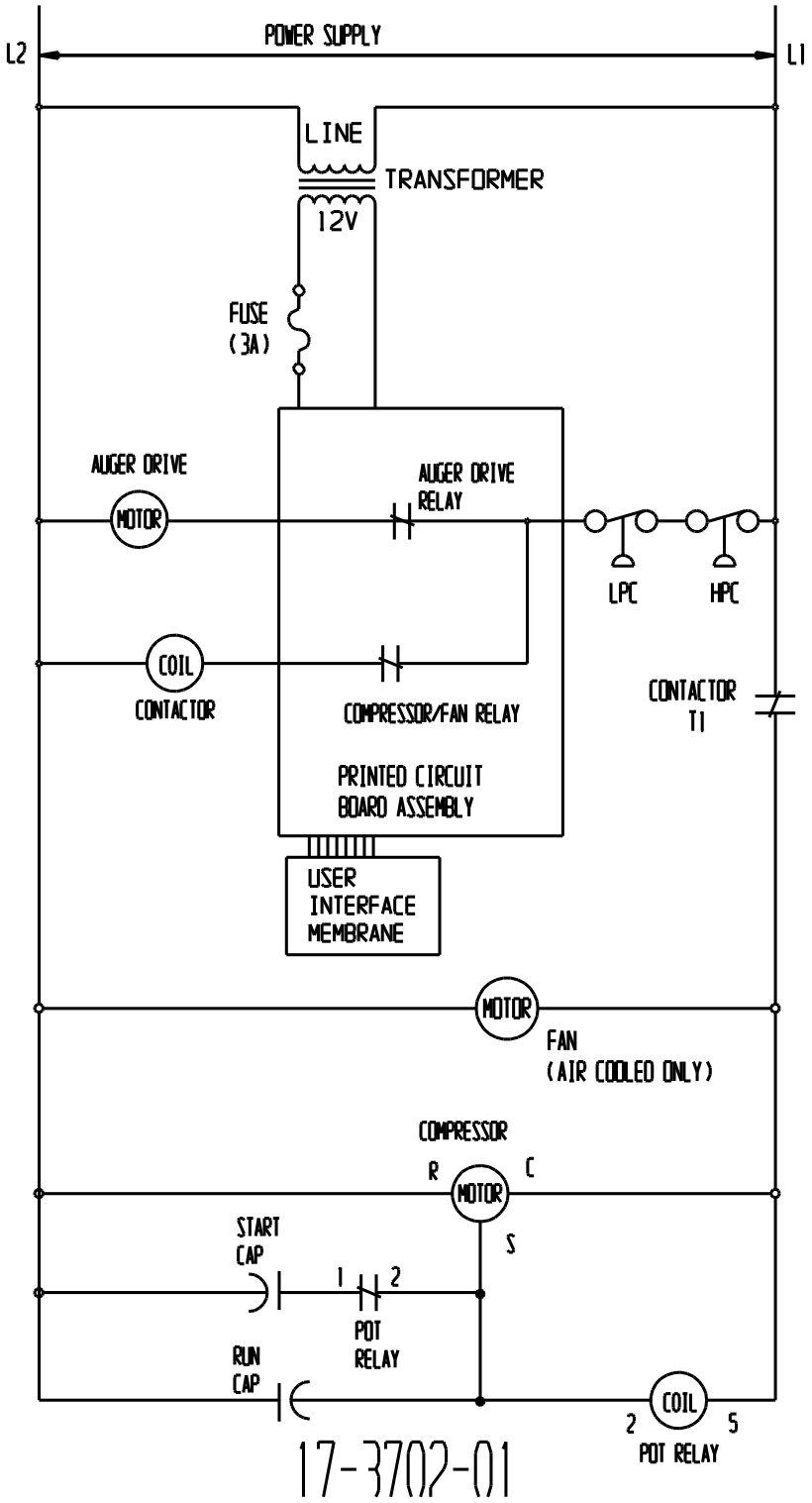
CAUTION:
MORE THAN ONE DISCONNECT MEANS MAY BE
REQUIRED TO DISCONNECT ALL POWER TO THIS UNIT.