power soak®

POWER SOAK SYSTEM

UNLIMITED CONTINUOUS POT, PAN & SHEET PAN WASHING SYSTEM WITH 3” SPACED WASH JETS, MODEL PSU3

The Power Soak Advanced System is a three-bay continuous pot, pan and sheet washing system with custom configured lengths and options. The patented Parallel Wash System’s washing wave action, with wash jets located every 3 inches along the back wall of the wash tank, continuously rotates wares from the back of the wash tank up to the operator in hot soapy water that removes baked-on food soils, providing unparalleled results with an excellent ROI.

Certifications:

PROJECT NAME:	
LOCATION:	
ITEM NO:	
QTY:	
MODEL NO:	
AIA NO:	
SIS NO:	
CSI SECTION:	11400

STANDARD SPECIFICATIONS:

- System custom configurable per quote or drawing
- Available left to right or right to left operation, 34” or 37” front to back depth
- All tanks and tabling, 14 gauge, 304 stainless steel
- System conforms to ANSI/NSF Standard 2 with all welds to be heliarc (TIG) welds
- Backsplash to be 9.5” overall height - 6” vertical with 45 degree angle to wall with 1-½” turn up
- Wash tank shall be 28.75” or 31.75” I.D standard front to back to back by 21” deep, 30” - 72” in length (increasing/decreasing in 6” increments)
- Parallel Wash Flow with low profile wash jets spaced every 3” flush along the back wall of wash tank & above the wash pump intake
- 2 HP Wash Pump Motor (30 & 36” Tank) or 3 HP Wash Pump Motor (42 & 48” Tank) with stainless steel impeller, pump housing and wash manifold
- Stainless steel wash pump intake to run full length of the rear of the wash tank below wash jets
- Stainless steel wash pump housing fully self-draining with no use of drain line or valve
- Wash Tank to have Advanced Wash Insert (AWI) – consisting of (1) ultra-high molecular weight polyethylene (UHMW) flexible tank divider, or (2) with sheet pan racks, (UHMW) wash tank flow guides, high density polyethylene (HDPE) rib system integrally connected with sst rods and 1/8” thick UHMW tank liner form fitting to bottom of wash tank
- Utensil Section to be powered by one dedicated wash jet
- Dual liquid high & low water level sensors
- Bottom of wash tank creased to facilitate draining
- 7000 watt wash tank heater maintains wash tank temperature at 115˚ +/- ½ ˚F
- Chemical injection points pre-drilled at factory
- Rinse Sink and Sanitizer Sink each shall be 28.75” or 31.75” I.D. front to back
- Soiled tabling custom configurable incorporating various pre-scrapping systems: i.e.: scrap sinks, disposers, collectors, pulpers or custom design scarping areas
- Drains & faucets included, but optional

CONTROL OPTIONS & SPECIFICATIONS:

☐ PS-400:
- LCD Display
- Timed, adjustable wash cycle
- Wash tank temperature read out when wash tank heater present
- Wash tank cycle timer read out
- Adjustable Sanitizer timer
- Sanitizer timer read out
- Multi Lingual Operation (English, Spanish, and French), can be chosen by the operator
- Optional Automatic Chemical Dispenser

☐ PS-420:
- Includes everything the PS-400 has with the addition of a Deep Clean Wash Cycle
- On the Deep Clean Cycle, when started, the wash runs continuously for 2 hours at 128ºF and then goes a timed cycle of the wash running for 5 minutes, then is idle for 10 minutes and restarts for 5 minutes, repeating the cycle until stopped and the wash tank is drained
- The PS-400 & PS-420 will not start above 122 degrees in Standard Wash mode to protect operator. Wash mode is operational when the wash tank temperature comes into operational safety range.
- Optional Automatic Chemical Dispenser

INSTALLATION REQUIREMENTS:

- Unit requires hot and cold water connections
- Drain connections
- Single point electrical connection

WARRANTY: 3 years for parts and labor

ADDITIONAL RESOURCES:

Request A Quote

Sales Tools

Find A Rep

ELECTRICAL CONNECTION OPTIONS:

DOMESTIC 60HZ:

WASH TANK SIZES 30”, 36”, 42”, 48” – 2 HP MOTOR (7 KW WASH TANK HEATER)

- ☐ 208V/60/1, 45.1 Amps
- ☐ 208V/60/3, 26.7 Amps
- ☐ 230V/60/1, 39.8 Amps
- ☐ 230V/60/3, 24.0 Amps
- ☐ 480V/60/3, 11.6 Amps

INTERNATIONAL 50HZ:

WASH TANK SIZES 30”, 36”, 42”, 48” – 2 HP MOTOR (7 KW WASH TANK HEATER)

- ☐ 380V/50/3 – 15.4 Amps

CONFIGURATION & ACCESSORY OPTIONS:

- ☐ Advanced wash sheet pan racks (18” x 26” sheet pans) – 2, 6 & 10 sheet pan racks - (available only for 37” front to back system)
- ☐ Hemmed end splash
- ☐ 1” end splash
- ☐ Channel end splash
- ☐ Backsplash end splash
- ☐ Filled end splash
- ☐ Channel front rim
- ☐ Rolled front rim
- ☐ Turned up back splash
- ☐ Turned down back splash with “z” clips
- ☐ Back splash extensions
- ☐ Up to 21” rinse or sanitizer tank in depth
- ☐ Welded field joint
- ☐ Mechanical filed joint (JBZ)
- ☐ Welded leg sets
- ☐ Advanced Wash Insert (AWI)
- ☐ Advanced Wash Insert (AWI) – sheet pan rack system (available only for 37” front to back system)
- ☐ Under shelfs
- ☐ Over shelfs
- ☐ Automatic chemical dispenser
- ☐ 2.5 kw wash tank heater (7kw – standard)
- ☐ Remote silent alert for PS-225 & PS-275 controls
- ☐ Quick disconnect pre-rinse sprayers
- ☐ Electrical disconnect
- ☐ Sanitizer tank accommodation for 180 degree recirculating hot water booster
- ☐ Mixing valves
- ☐ Drying racks for clean drain board
- ☐ Overflows for rinse and/or sanitizer tank

Length	BELOW CHART SHOWS A SAMPLE CONFIGURATION OF UNIT FROM LEFT TO RIGHT							
	End Splash	Soiled Drain Board	Scrap Sink	Wash Tank	Rinse Tank	Sanitzer Tank	Clean Drain Board	End Splash
98"	1”	-	12”	42" x 21”	14” x 18”	14” x 18”	14”	1”
132"	1”	12”	12”	48" x 21”	20” x 14”	20” x 14”	18”	1”

© 2026 Electrolux Professional, Inc. All Rights Reserved.
Information known to be correct at time of creation. Please reference our website for the most updated product information and specifications.

SAMPLE CONFIGURATION:

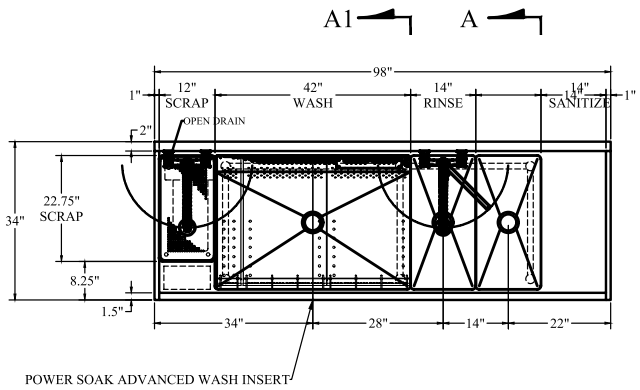

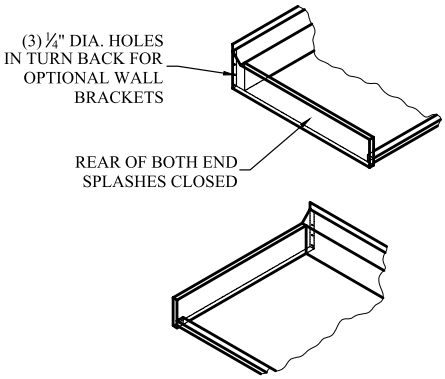

TYPICAL ENDSPLASH DETAILS

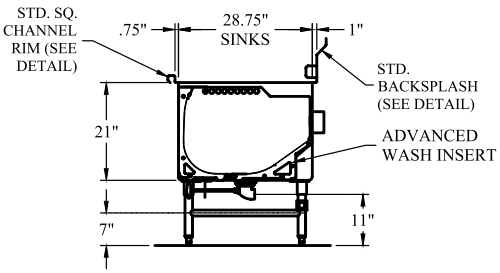

SECTION "A1"

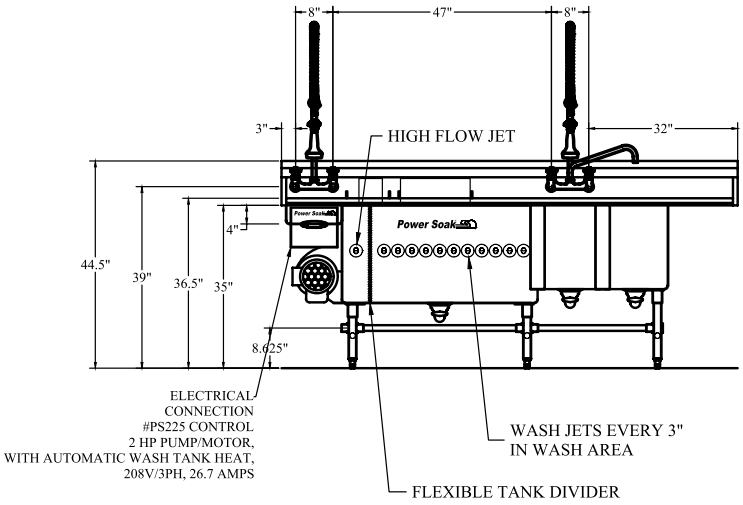

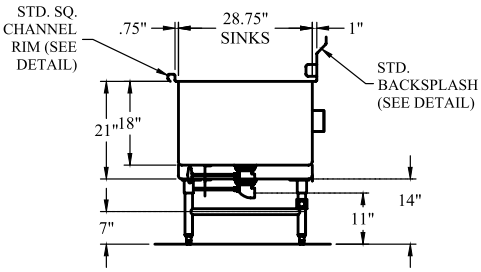

SECTION "A"

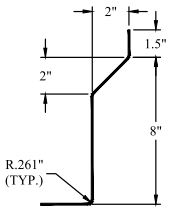

BACKSPLASH DETAIL

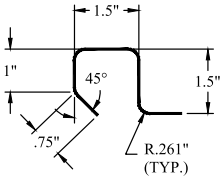

SQUARE CHANNEL RIM DETAIL

© 2026 Electrolux Professional, Inc. All Rights Reserved.
Information known to be correct at time of creation. Please reference our website for the most updated product information and specifications.

SAMPLE CONFIGURATION:

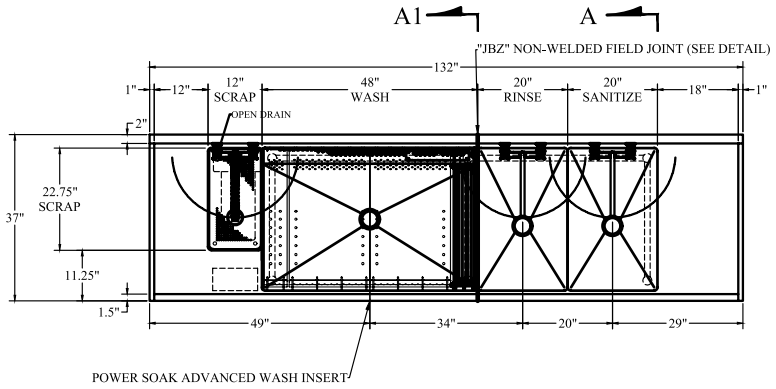

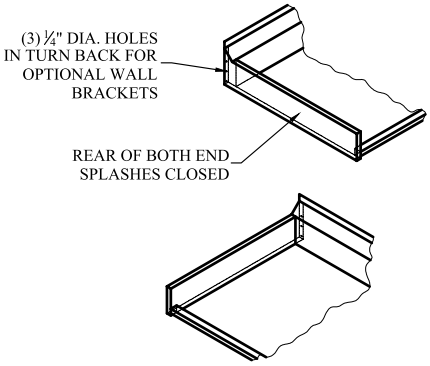

TYPICAL ENDSPLASH DETAILS

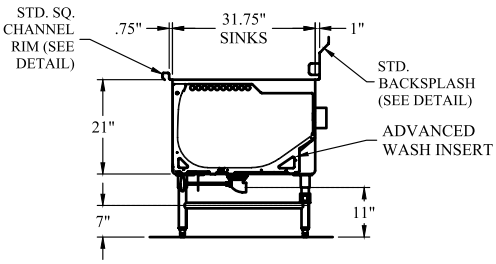

SECTION "A1"

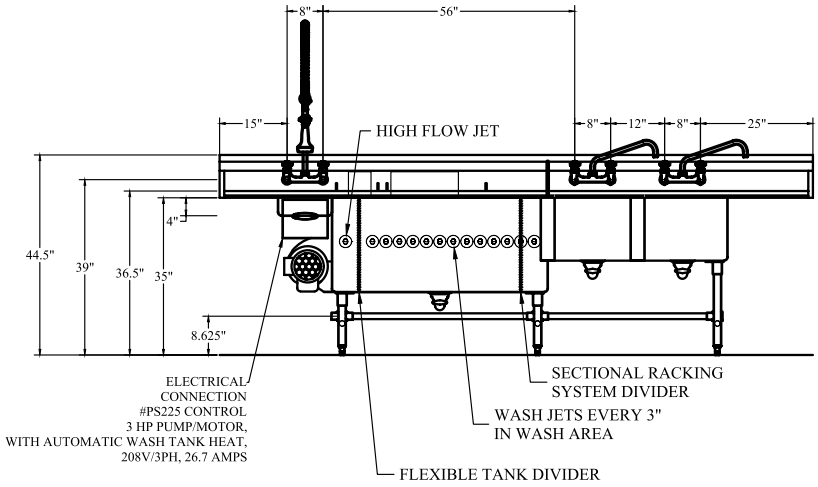

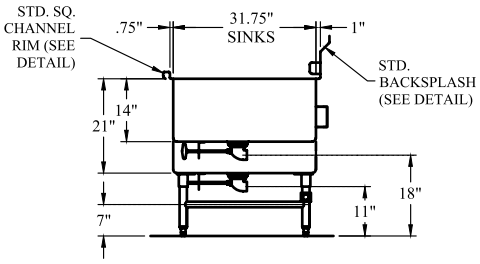

SECTION "A"

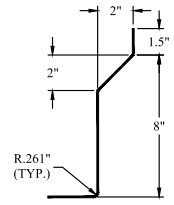

BACKSPLASH DETAIL

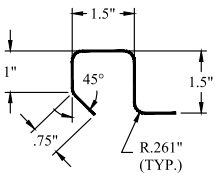

SQUARE CHANNEL RIM DETAIL

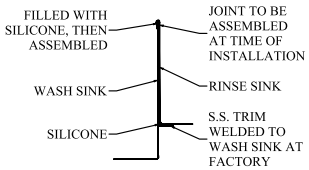

DETAIL OF "JBZ" NON-WELDED FIELD JOINT

© 2026 Electrolux Professional, Inc. All Rights Reserved.
Information known to be correct at time of creation. Please reference our website for the most updated product information and specifications.