TRENTO
ELEVATING CULINARY EXCELLENCE

INSTRUCTION MANUAL

Dishwashers

Item	49125	49126	49127	49128
Model	CD-IT-50-1	CD-IT-50-2	CD-IT-110	CD-IT-130

Warning!

Before you begin using your appliance, **PLEASE READ AND UNDERSTAND THIS DOCUMENT CAREFULLY** before installing, operating, maintaining, or servicing.

There are many important safety messages in this manual and on your appliance. Always read all safety messages.

Failure to do so can result in appliance failure, property damage, serious injury or death. Appliance failure, injury or property damage due to improper installation is not covered by warranty.

Stop!

DO NOT RETURN THIS PRODUCT TO THE STORE!

For questions or assistance with this product, call TRENTO Toll free: **1-833-487-3686** or visit the support section from our website, **www.trentoequipment.com**

Version: Revised - 09/22/2026

MADE IN ITALY

1 YEAR WARRANTY PARTS AND LABOUR

Intertek Intertek

TABLE OF CONTENTS

Section	Page
General Information	3 - 4
Safety and Warranty	4 - 6
Technical Specifications	7 - 9
Installation and Operation	9 - 15
Maintenance	15 - 17
Troubleshooting	17 - 19
Figure Drawings	20
Parts Breakdown	21 - 100
Electrical Schematics	101 - 104
Notes	105 - 106
Warranty Registration	107

GENERAL INFORMATION

Omcan Manufacturing and Distributing Company Inc., Food Machinery of America, Inc. dba Omcan and Omcan Inc. are not responsible for any harm or injury caused due to any person's improper or negligent use of this equipment. The product shall only be operated by someone over the age of 18, of sound mind, and not under the influence of any drugs or alcohol, who has been trained in the correct operation of this machine, and is wearing authorized, proper safety clothing. Any modification to the machine voids any warranty, and may cause harm to individuals using the machine or in the vicinity of the machine while in operation.

CHECK PACKAGE UPON ARRIVAL

Upon receipt of an Omcan shipment please inspect for external damage. If no damage is evident on the external packaging, open carton to ensure all ordered items are within the box, and there is no concealed damage to the machine. If the package has suffered rough handling, bumps or damage (visible or concealed), please note it on the bill of lading before accepting the delivery and contact Omcan within 24 hours, so we may initiate a claim with the carrier. A detailed report on the extent of the damage caused to the machine must be filled out within three days, from the delivery date shown in the shipping documents. Omcan has no recourse for damaged products that were shipped collect or third party.

Before operating any equipment, always read and familiarize yourself with all operation and safety instructions.

Omcan would like to thank you for purchasing this machine. It's of the utmost importance to save these instructions for future reference. Also save the original box and packaging for shipping the equipment if servicing or returning of the machine is required.

Omcan Fabrication et distribution Companie Limité et Food Machinery d'Amerique, dba Omcan et Omcan Inc. ne sont pas responsables de tout dommage ou blessure causé du fait que toute personne ait utilisé cet équipement de façon irrégulière. Le produit ne doit être exploité que par quelqu'un de plus de 18 ans, saine d'esprit, et pas sous l'influence d'une drogue ou d'acohol, qui a été formé pour utiliser cette machine correctement, et est vêtu de vêtements de sécurité approprié. Toute modification de la machine annule toute garantie, et peut causer un préjudice à des personnes utilisant la machine ou des personnes à proximité de la machine pendant son fonctionnement.

VÉRIFIEZ LE COLIS DÈS RÉCEPTION

Dès réception d'une expédition d'Omcan veuillez inspecter pour dommages externes. Si aucun dommage n'est visible sur l'emballage externe, ouvrez le carton afin de s'assurer que tous les éléments commandés sont dans la boîte, et il n'y a aucun dommage dissimulé à la machine. Si le colis n'a subi aucune mauvaises manipulations, de bosses ou de dommages (visible ou cachée), notez-le sur le bond de livraison avant d'accepter la livraison et contactez Omcan dans les 24 heures qui suivent, pour que nous puissions engager une réclamation auprès du transporteur. Un rapport détaillé sur l'étendue des dommages causés à la machine doit être rempli dans un délai de trois jours, à compter de la date de livraison indiquée dans les documents d'expédition. Omcan n'a aucun droit de recours pour les produits endommagés qui ont été expédiées ou cueilli par un tiers transporteur.

Avant d'utiliser n'importe quel équipement, toujours lire et vous familiariser avec toutes les opérations et les

GENERAL INFORMATION

consignes de sécurité.

Omcan voudrais vous remercier d'avoir choisi cette machine. Il est primordial de conserver ces instructions pour une référence ultérieure. Également conservez la boîte originale et l'emballage pour l'expédition de l'équipement si l'entretien ou le retour de la machine est nécessaire.

Omcan Empresa De Fabricacion Y Distribucion Inc. Y Maquinaria De Alimentos De America, Inc. dba Omcan y Omcan Inc. no son responsables de ningun daño o perjuicío causado por cualquier persona inadecuada o el uso descuidado de este equipo. El producto solo podra ser operado por una persona mayor de 18 años, en su sano juicio y no bajo alguna influencia de droga o alcohol, y que este ha sido entrenado en el correcto funcionamiento de esta máquina, y ésta usando ropa apropiada y autorizada. Cualquier modificación a la máquina anúla la garantía y puede causar daños a las personas usando la máquina mientras esta en el funcionamiento.

REVISE EL PAQUETE A SU LLEGADA

Tras la recepcion de un envio Omcan favor inspeccionar daños externos. Si no hay daños evidentes en el empaque exterior, Habra el carton para asegurararse que todos los articulos solicitados ésten dentro de la caja y no encuentre daños ocultos en la máquina. Si el paquete ha sufrido un manejo de poco cuidado, golpes o daños (visible o oculto) por favor anote en la factura antes de aceptar la entrega y contacte Omcan dentro de las 24 horas, de modo que podamos iniciar una reclamación con la compañia. Un informe detallado sobre los daños causados a la máquina debe ser llenado en el plazo de tres días, desde la fecha de entrega que se muestra en los documentos de envío. Omcan no tiene ningun recurso por productos dañados que se enviaron a recoger por terceros.

Antes de utilizar cualquier equipo, siempre lea y familiarizarse con todas las instrucciones de funcionamiento y seguridad.

Omcan le gustaría darle las gracias por la compra de esta máquina. Es de la mayor importancia para salvar estas instrucciones para futuras consultas. Además, guarda la caja original y el embalaje para el envío del equipo si servicio técnico o devolución de la máquina que se requiere.

SAFETY AND WARRANTY

READ THE INSTRUCTIONS CAREFULLY BEFORE INSTALLING THE MACHINE.

WARNING: FAILURE TO COMPLY (EVEN PARTIALLY) WITH THE RULES GIVEN IN THIS MANUAL WILL INVALIDATE THE PRODUCT WARRANTY AND RELIEVES THE MANUFACTURER OF ANY RESPONSIBILITY.

WARNINGS

This instructions booklet must be kept with the machine for future consultations. If the machine is sold or transferred to other users, make sure the booklet always goes with the unit so that the new owner can have all the necessary information on operations and all relevant instructions. The dishwasher shall be installed in accordance with local codes, or in the absence of local codes, installed in accordance with the applicable requirements in the National Electrical Code, NFPA 70, Canadian Electrical Code (CEC), Part 1, CSA C22.1, and Standard for Ventilation Control and Fire Protection of Commercial Cooking Operations, NFPA 96. These warnings are provided to safeguard the user in conformity with technical standards UL 921 and NSF3.

The instructions booklet must be carefully read before installation and before starting the machine. The user must comply with the following rules:

- Adaptation of the electrical and water system for dishwasher installation must be carried out by qualified operators only.
- The user shall not carry out any repair and/or maintenance operations.
- When the main switch is OFF, only qualified personnel can access the control panel.
- Servicing of this machine must be performed by authorized personnel only.
  Note: use genuine spare parts only. Non-genuine parts will void the warranty and the manufacturer will take no responsibility for any damage.
- Do not use old hose, but only new ones.
- This appliance can be used by trained youth aged from 15 years and above. It cannot be used by persons with reduced physical, sensory or mental capabilities or lack of experience and knowledge.
- Children shall keep off the appliance.
- Cleaning and user maintenance shall not be made by children without supervision.
- This machine is designed exclusively for washing plates, glasses, trays, baskets and various pots and pans with human food type of residue. DO NOT wash articles different from those stated above and fragile objects or materials not resistant to washing process.
- It is mandatory to install on the machine feeding line, exclusively dedicated for this unit:
  - A fuse protection system with the characteristics shown on the data-plate (or an equivalent system).
  -A suitable omni-polar switch, sized according to the absorption shown on the data plate, in order to disconnect the power network completely. Only such a switch grants a full warranty of a complete separation from the electric network and it has to be used, always and strictly, before any intervention on the electrical panel, and by qualified personnel only. This switch shall be installed in the immediate vicinity of the machine. Only this switch must be used, always and strictly, to de-energize the machine at the end of the work session.
- Make sure the appliance is linked to an efficient ground connection.
- Do not open the machine doors when operating. After switching the machine off, wait for at least 15 seconds after the motors stop.

WARNINGS: IT IS FORBIDDEN TO INSERT HANDS AND/OR TOUCH INTERNAL PART WHEN THE MACHINE IS OPERATING AND/OR AT THE END OF THE WASH CYCLE.

- Before using the machine, the personnel shall know the position of the omni-polar switch that disconnected the machine from the electrical network, the position of the water connection shut-off valve and the procedures to switch off and secure the machine.

SAFETY AND WARRANTY

- Follow the instructions given in the manufacturer's booklet for cleaning operations.
- This machine must be disconnected from the main electrical supply after use at the end of the day and for any service/maintenance operation following this procedure:
  - Switch the machine off from the control panel.
  - Drain the tank by removing the overflow pipe.
  - Disconnect the electrical supply by the omni-polar switch (main switch located on the wall).
  - Shut the water supply valve(s).

  Disregarding the aforesaid prescriptions is a serious misuse and can cause damages and injures to property and people, and will relieve the manufacturer from whatever liability.
- Do not use water to extinguish fires on electrical parts.
- Do not cover the intake or dissipation grids.
- Water inlet to the machine 60PSI (400kPa) maximum.

NOTICE: this machine must be operated with an automatic detergent dosing pump including a visual means to verify that detergents are delivered, or a visual or audible alarm to signal if detergents are not available for delivery to the washing system. Please see instructions for electrical and plumbing connections located in this manual and in the feeder equipment manual.

Note: the manufacturer declines any responsibility for accidents to people or any damage deriving from failure to observe the above listed instructions.

RESIDENTIAL USERS: vendor assumes no liability for parts or labor coverage for component failure or other damages resulting from installation in non-commercial or residential applications. The right is reserved to deny shipment for residential usage; if this occurs, you will be notified as soon as possible.

1 YEAR PARTS AND LABOUR WARRANTY

Within the warranty period, contact Omcan Inc. at 1-800-465-0234 to schedule an Omcan authorized service technician to repair the equipment locally.

Unauthorized maintenance will void the warranty. Warranty covers electrical and part failures, not improper use.

Please see https://omcan.com/disclaimer for complete info.

WARNING:

The packaging components are classified as normal solid urban waste and can therefore be disposed of without difficulty.

In any case, for suitable recycling, we suggest disposing of the products separately (differentiated waste) according to the current norms.

DO NOT DISCARD ANY PACKAGING MATERIALS IN THE ENVIRONMENT!

TECHNICAL SPECIFICATIONS

Model	CD-IT-50-1	CD-IT-50-2
Item Number	49125	49126
Compatible Plate Dimensions (Dia.)	13.6" / 346mm	12.8" / 325mm
Compatible Dishes Height	12.6" / 321mm	12.2" / 310mm
Rack Dimensions	20" x 20" / 508 x 508mm	
Rack Equipment	1 - Plastic Plates Basket	
	1 - Large Mesh Glass Basket	
	1 - Cutlery Basket	
Inlet Water Pressure (170 - 620 kPa)	25 - 90 PSI	
Washing Cycles (sec)	1 (120) | 2 (180)	
Water Supply 131°F Racks/H (*)(1)	30 | 20	
Water Supply 50°F Racks/H (*)(1)	21 | 20	
Water Consumption / Cycle (rinse pressure 15 PSI)	0.74 gal	
Booster Capacity	1.51 gal	
Booster Heating Element	6.53 kW	
Rinsing Temperature (Set)	85°C / 185°F	
Tank Capacity	7.66 gal	7.13 gal
Tank Heating Element	2.94 kW	
Tank Temperature (Set)	71.1°C / 160°F	
Electrical	220 - 240V / 60Hz / 1	
Power Required	7.09 kW	
Pump Power	0.56 kW (89,8 gal/min***)	
Drain Pump	43W hMAX 31.5" / 800mm (10.78 gal/min***)	
Noise	63 dB(A)	59.3 dB(A)
Dimensions	23.3" x 23.6" x 33.4" 591 x 600 x 849mm	23.4" x 24" x 33.3" 595 x 610 x 846mm
Weight	130 lbs. / 59 kgs.	134.5 lbs. / 61 kgs.

TECHNICAL SPECIFICATIONS

Model	CD-IT-110	CD-IT-130
Item Number	49127	49128
Compatible Plate Dimensions (Dia.)	16.3" / 413mm	16.1" / 410mm
Compatible Tray Size	Gastronorm 1/1 (20.9" x 12.8" / 530 x 324mm)	
Rack Dimensions	20" x 20" / 508 x 508mm	
Rack Equipment	2 - Plastic Plates Basket	
	1 - Large Mesh Glass Basket	
	2 - Cutlery Basket	
Inlet Water Pressure (170 - 620 kPa)	25 - 90 PSI	25 - 95 PSI
Washing Cycles (sec)	1 (120) | 2 (180)	1 (120) | 2 (180) | 3 (240) | 4 (300) | 5 (360)
Water Supply 131°F Racks/H (*)(1)	30 | 20	30 | 20 | 15 | 12 | 10
Water Supply 50°F Racks/H (*)(1)	30 | 20	20 | 20 | 15 | 12 | 10
Water Consumption / Cycle (rinse pressure 15 PSI)	0.79 gal	0.69 gal
Booster Capacity	2.66 gal	3.96 gal
Booster Heating Element	9.80 kW	9 kW
Rinsing Temperature (Set)	85°C / 185°F	
Tank Capacity	7.93 gal	11.1 gal
Tank Heating Element	2.94 kW	2.7 kW
Tank Temperature (Set)	71.1°C / 160°F	
Electrical	220-240V / 60Hz / 1	220 - 240V / 60Hz / 3
Power Required	10.92 kW	10.75 kW
Pump Power	1.12 kW	1.75 kW
Drain Pump	43W hMAX 31.5" / 800mm (10.78 gal/min***)	
Noise	63,6±0.7 dB(A)	66,4±0.7 dB(A)
Dimensions	28.4" x 28.9" x 56.9" 721 x 735 x 1445mm	28.4" x 28.3" x 56.9" 721 x 719 x 1445mm
Dimensions with Open Hood	28.4" x 28.9" x 74" 721 x 735 x 1880mm	28.4" x 28.3" x 74.1" 721 x 719 x 1881mm
Weight	231 lbs. / 104.8 kgs.	253.5 lbs. / 115 kgs.

(*) STANDARD THERMOSTOP
(***) MAXIMUM FLOW RATE
(1) In case of cold water supply and/or continuous washing, the rinse-water heating process might take more

time than usual, until the proper rinse temperature is reached. For this reason, the wash-cycle total timing might result longer than set.

INSTALLATION AND OPERATION

RECEIVING THE MACHINE

Pay special attention in choosing the lifting points and the machine bar and centre during the loading and unloading operations. Before accepting the machine, verify that all the data on the data-plate corresponds to the required ones and to the ones of the available electrical supply. After unpacking, make sure the machine has not been damaged during transportation. If so, do notify the seller immediately about the problem. If the damage might question the machine safety, do not install it. Double check the firm tightness of all hose-clamps on piping, nuts, bolts and electrical connection that might have come loose during transportation, to prevent water dripping leakages, or other damages, during the machine operation.

STORAGE

Storage temperature: min. +40°F (+4°C) – max. +122°F (+50°C) - humidity <90%. The stored parts should be checked periodically to detect any sign of deterioration. Do not store the machine exposing it to atmospheric agents (rain, sun, cold, etc.). Do not place material on the packed machine.

PREPARE FOR INSTALLATION

This is just a guide-line for the machine installation. The installation must be performed by a qualified engineer.

WATER CONNECTIONS

Water connections must be carried out in compliance with current local standards. The water system must have characteristics between the parameters specified in the below table.

Water supply characteristics	Min	Max
Static pressure*	30 PSI (~200Kpa)	60 PSI (~400Kpa)
Dynamic pressure	30 PSI (~200Kpa)	50 PSI (~350Kpa)
Cold water-supply temperature (machine with extra power)	110°F (~43°C)	150°F (~65°C)
Hot water-supply temperature	140°F (~60°C)	150°F (~65°C)
Capacity	2.6 gpm (~10 l/min)	

*If higher than 60 PSI (400Kpa), it is mandatory to install a pressure reducer.
To improve the machine performance keep the temperature intervals indicated. It has to be installed a water supply shut-off valve close to the machine in an accessible point. Use only new flexible pipes for the water connections.

INSTALLATION AND OPERATION

WATER SUPPLY CHARACTERISTICS

The machine water supply must be potable. The inlet water must also meet the parameters given in the below table.

Water parameters table	Min	Max
Chlorine[1]		2mg/l
pH	6,5[1]	8.5[3]
Water hardness		8°F[2-3]
Iron[3]		0.2 mg/l
Manganese[4]		0.05 mg/l

[1]Out of range values might lead to corrosion and jeopardize the life of the machine.
[2]Should the water hardness is higher it is compulsory to install a water softener and check periodically its operation.
[3]Out of range values might lead scaling and sediments with a consequent lower performance, functionality, and expected life of the machine.
[4]Desired value: out of range values might lead stainless steel blackening/tarnishing.
It is recommended a water test once a year.

POSITIONING THE MACHINE

Remove the packing with care. Maintain a minimum distance of about 2 inches (50mm) from the walls, so that motors are ventilated. Check that the machine is properly levelled, by adjusting the legs. Make sure the machine is not standing on the power cable or on the filling/drain hoses. Level the machine flat, by adjusting the support feet.

ELECTRICAL CONNECTION

Only qualified and properly trained personnel can operate on the electric board and connections.

BEFORE THE INSTALLATION:
Make sure that the voltage is the same as reported on the data-plate. Make sure the line voltage matches the machine power and voltage indicated on the machine data-plate. Electrical connection must be carried out in compliance with the current local standards. Use the data reported on the data-plate to check dimensions and electrical connections.

It is mandatory to install on the machine feeding line, exclusively dedicated for this unit:
- **A fuse protection system with the characteristics shown on the data-plate (or an equivalent system).**
- **A suitable omni-polar switch, sized according to the absorption shown on the data plate, in order to disconnect the power network completely. Only such a switch grants a full warranty of a complete separation from the electric network and it has to be used, always and strictly, before any intervention on the electrical panel, and by qualified personnel only.**

This switch shall be installed in the immediate vicinity of the machine. Only this switch must be used, always

and strictly, to de-energize the machine at the end of the work session. Make sure the appliance is linked to an efficient ground connection.

WARNING: check very carefully if the "ground connection" of the machine, is properly sized and fully efficient, and that not too many units are connected on it. An undersized or poor "ground connection" might lead to corrosion and/or pitting effect on the stainless steel plates, even to perforation.

The machine has a terminal on the back panel indicated by the symbol that is meant to link the metal structures of different appliances, to prevent electro-static shocks.

Note: do not modify the protections or remove them. Only if the power supply is cut off from the main switch on the wall. Only if the power supply is cut off from the main switch on the wall it is possible to work on the dishwasher electric circuits. Lock the main switch on the wall to signal the work in progress on the dishwasher's electric circuits.

DO NOT USE POWER CORD OR GFI OUTLET: this unit MUST BE hard-wired to a dedicated appropriately size circuit breaker.

TEMPERATURE ADJUSTMENT

The adjustments are already carried out during the factory testing. If necessary, the water temperatures of the wash and rinse cycles can be adjusted by means of the fine-tune screws on the respective thermostats. The set temperatures are 160°F (71°C) the wash cycle (tank) and 185°F (85°C) for the rinse cycle (boiler).

RINSE AID DISPENSER OPERATION

OPERATION

It utilizes the difference in combined pressure caused by turning the washing pump on and off, and the rinse pressure.

WATER CONNECTION

1. Connect the dispenser tube fitting A to the pump, by means of the rubber tube installed in the appliance (pump pressure).
2. Connect the small black rubber tube by the brass delivery fitting B to the connection near the boiler (injector).
3. Make sure that the green product suction tube is inserted on the special fitting C and that the small filter and the ballast are inserted in the rinse aid tank.

PRIMING

To prime the dispenser, turn on the appliance and carry out several complete wash cycles or press the adjustment screw D during the wash cycle and open and close the door combined with pressing the pin D. This method speeds up the refill process.

ADJUSTMENT

With each rinse cycle, the dispenser draws an amount of rinse aid, adjustable from 0 to 2 cubic inches (from

INSTALLATION AND OPERATION

0 to 4 cc), equivalent to a length of 0 to 11” (from 0 to 30 cm) drawn into the suction tube. In order to regulate the dispenser to the minimum amount, turn the adjustment screw D (completely clockwise. For the maximum amount, turn the screw anticlockwise about 20 complete turns.

N.B.: for each turn of the screw the amount of the product drawn into the tube varies by 5/8 inches (1,6cm), equivalent to 13/16 cubic inches/run (0,2 cm³/turn) - (about 1/8 Dramme/run - 0,21g/turn - with a concentration of 0,60 oz/cubic inches - 1,05 g/cm³ of rinse aid). The rinse aid cannot function properly if the difference in level between the bottom of the machine and the container exceeds 31 inches (80 cm).

THE DISPENSERS ARE PRE-SET TO A 2” (5 CM) INTAKE OF PRODUCT FOLLOWING A TEST PHASE SYSTEM CHECK. THIS MEASUREMENT SHOULD BE ADJUSTED ACCORDING TO THE TYPE OF RINSE AID USED AND WATER HARDNESS.

DETERGENT DISPENSER INSTALLATION

ELECTRICAL CONNECTION
Follow the wiring diagram attached to the machine.

PIPE CONNECTION
- Remove the cap from the hole and fit the delivery connection.
- Correctly mount the injector C using the appropriate fixtures.
- Connect the suction tube to the suction attachment of the dispenser (see pict. 2 - point A).
- Connect the delivery tube to the other attachment of the dispenser, and the delivery fitting (see pict. 2 point B).
- Insert the suction tube with filter in the detergent tank.
- Prime the detergent and proceed to dispense.

DISPENSING THE DETERGENT
The detergent dispenser capacity can be adjusted using a screwdriver as shown in picture 1. Every 13/16 inches (2 cm) of product drawn into the tube corresponds to 1/64 cubic inches (0,25 cm³) equivalent to 0,01 once (0,3 g) with a concentration of 1/16 once/cubic inches (1,2g/cm³).

DRAINING PUMP
When installing, pay particular attention to the position of the draining tube (see pict. 3).

THE DRAIN, RINSE AID, AND DETERGENT HOSES ARE LOCATED INTERNALLY WITHIN THE DISHWASHER AND ARE ACCESSIBLE TO THE INSTALLER FROM INSIDE THE UNIT.

OPERATION

- Insert the overflow tube in the special seat inside the tub (pict. 4).
- Check that the filter is correctly fitted in its seat (pict. 4). The filter must be cleaned after every 20 wash cycles and whenever necessary. DO NOT use the appliance without the filter.
- Close the dishwasher door.
- Insert the special rinse aid dispenser tube in the liquid container and check that the quantity of additive is

sufficient for daily use.
- Turn on the water tap.
- Turn switch 0-1 1 to position 1 (pressed). The operation is signalled by the switch indicator lighting up or by the indicator with the symbol A. The machine will automatically fill the tub with water; then the heating phase begins. Indicator C comes on when the water temperature is reached.
- Insert the rack filled with dishes to wash. The plates must be correctly placed in the rack.
- On machines with selector 4 select the wash cycle required.
- To begin the wash cycle, if there is no automatic option, put the liquid detergent in the tub and press the START button 2. The button light or indicator B will come on, indicating that the cycle has started. At the end of the washing cycle, a hot rinse cycle will take place. The indicator light of the START button 2 will turn off when the cycle has finished.
- The appliance is now ready for a new wash.
- At the end of the day, clean the machine.
- Turn off the machine and the water tap.

DISHES AND CUTLERY LOADING

Before loading the dishes it is necessary to carry out a proper cleaning off of the food residuals. It is not necessary to rinse the dishes with water before the loading.

WARNING: do not wash items contaminated by petrol, paint, pieces of steel or iron, ash, sand, wax, lubricating grease. These substances damage the machine. Do not wash fragile items or made of material that do not stand the washing process.

FOLLOW THESE TIPS:
- Crockery and cutlery must not lie inside one another, covering each other.
- Place the dishes so that all the surfaces can be reached by the water; otherwise the dishes cannot be washed properly.
- Make sure that the dishes are placed in a stable position and that the empty containers (cups, glasses, bowls, etc.) do not turn upside down.
- Place all the empty containers like cups, glasses, etc., upside down.
- Place in tilted position the dishes with deep hollows, so that the water can drain.
- Make sure that the smaller dishes do not fall from the baskets.
- Check all the wash arms runs freely and they are not blocked by too tall or too prominent crockery. Eventually, run a manual rotation of the arms to check it.

Some foods, such as carrots, tomatoes, and others, may contain some natural dyes substances, that in large amounts, can alter the crockery and plastic parts colors. Any discoloration does not mean that the plastic is not heat resistant.

CROCKERY AND CUTLERY NOT SUITABLE FOR DISHWASHER
- Wooden crockery and cutlery or with wooden parts; water at high temperature causes deformation to wood. Also the adhesives used are not suitable for treatment in the dishwasher; a consequence could be the handles detachment.
- Crafts, precious vases or decorated glasses.
- Not heat-resistant plastic crockery.

INSTALLATION AND OPERATION

- Copper, brass, pewter or aluminum objects: they may become discolored or opaque.
- The decorations on glass, after a certain number of washes, can lose gloss.
- Fragile glasses or crystal items, if often washed, can become opaque. We recommend to buy exclusively crockery and cutlery suitable for dish washing. After several washes, the glass can become opaque.

It is mandatory to repeat the washing cycle if at the end of the cycle the crockery are not well clean or if there are washing residues (glasses, cups, bowls, etc. with liquid inside).

WARNINGS:
- Do not slam the door when opening and closing.
- Do not put material or objects on the machine.
- The water used for the washing and the rinsing is not potable because of the presence of chemical additives. In case of contact with skin or eyes wash them immediately with plenty of water and check the safety instructions of the detergent manufacturer. If necessary, contact a doctor.
- Some important rules must be followed for the use of this appliance:
  - Never touch the appliance with wet hands or feet.
  - Never use the appliance when barefooted.
  - Do not install the appliance in places exposed to water splashes.
- This machine must be disconnected from the main electrical supply after use at the end of the day and for any service/maintenance operation. Switch off the main switch located on the wall, which shall be installed by a professional installer. Shut the water supply valve(s).

WARNING: INTERNAL CLEANING OF THE MACHINE SHALL BE CARRIED OUT AT LEAST 10 MINUTES AFTER IT HAS BEEN TURNED OFF.

WARNING: DO NOT INSERT HANDS AND/OR TOUCH THE PARTS LOCATED AT THE BOTTOM OF THE WASH TANK AND/OR AT THE END OF THE WASH CYCLE.

DETERGENT USE

ONLY use NON FOAMING types suitable for industrial glass-washers and dishwashers. It is advisable to use liquid detergents. The detergent must be put directly in the tub. The correct amount will be suggested by the product manufacturer according to the water hardness. By request, the dishwasher can be equipped with an automatic detergent dosing pump (always recommended). 3/8 inches (1 cm) of the product drawn into the tube is equal to about 3/32 Dr (0,15g). A correct amount of detergent is very important for a successful wash. This machine must be operated with an automatic detergent dosing pump. Verify the correct operation by checking the detergent flow in the transparent suction hose from the detergent canister. Make the check during tank filling or rinse phase.

RINSE AID USE

The machine is equipped with a rinse aid dispenser. The machine automatically draws the product. The rinse-aid chemical, shall be suitable for professional glass and dishwashers. It is advisable to rely on specialized retailers in the sector. The amount dispensed can be regulated by operating the fine-adjustment screw on the dispenser. Reduce the amount by turning the screw clockwise, increase by turning it anticlockwise. The recommended amount is 7/8 - 1 15/16 inches (2-5 cm) of product measured on the suction tube. 3/8 inches (1

cm) of the product drawn into the tube is equal to about 1/16 Dramme (0,13g). A correct amount of rinse aid is very important for a quick and clean drying.

COMPLIANCE WITH HYGIENE REGULATIONS, H.A.C.C.P. AND NSF

- The machines are equipped with a temperature indicator to indicate the boiler and tank temperature. Wait until the set temperatures are fully reached.
- The lighting of the light points out the attainment of the temperature of the tank (160°F - 71°C) and the rinsing (185°F - 85°C).
- Verify that the pressure of the rinsing is between 15 and 25 Psi.
- Remove solids form the crockery, not clog filters, nozzles and pipes.
- Drain the wash tanks and clean the filters at least twice a day.
- Check that detergent and rinse aid dosing is correct (as recommended by the supplier). Before starting the machine make sure the amount of chemicals in the tanks is sufficient for the daily requirement.
- Keep the tables surfaces clean.
- Remove the basket from the machine with clean hands or gloves, not to contaminate the cutlery.
- Do not dry or polish the crockery with unsterile cloths, brushes or rags.

DRAINING PUMP SYSTEM

To drain completely the wash-tank keep the machine ON, extract the overflow pipe and shut the door. Press

MAINTENANCE

ROUTINE MAINTENANCE

ATTENTION: the machine is not protected against pressurized water sprays. Do not use pressure cleaning systems against the machine. It is recommended to contact your chemicals distributor for proper cleaning instructions, in order to have detailed indications on methods and products suitable for the correct periodical machine sanitation. Do not use bleach or detergents containing chlorine.

To ensure the best performance of the machine a proper and systematic cleaning is required. The following shall be carried out, at least once/day:

- Turn off the ON/OFF switch.
- Turn off the water valve.
- Drain the water removing the overflow pipe.
- Remove the filter and clean it with a brush under running water.
- Remove the rotors by loosening the fixing screws, and thoroughly clean the nozzles and cleaning and rinsing arms under running water.
- Reassemble all parts and refit the rotors in their seats, fixing them with the relative screws.

MAINTENANCE

- Clean the tub thoroughly using specific products.
- At the end of the day, it is advisable to leave the dishwasher door open.

Note: it is advisable to replace the tub water by refilling the tub at least every 20 wash cycles, or twice a day. Do not use metal brushes or corrosive products which can damage the machine.

SPECIAL MAINTENANCE

Once or twice a year have the machine inspected by a qualified technician, in order to:
1. Clean the inlet filter of the solenoid-valve.
2. Remove incrustations from the heating elements.
3. Check the status and the tightness of all gaskets.
4. Check the wearing of each component.
5. Check the efficiency of the dosing pumps.

ENVIRONMENTAL ASPECTS

PACKING
The packing consists of the following:
- A wood pallet.
- A nylon bag (LDPE).
- Multi-layered cardboard.
- Polystyrene foam (PS).
- Polypropylene support (PP).

Please dispose of the materials listed above, according to the current regulations.

DISPOSAL
The machine must be disposed of according to current regulations: contact the Municipalized Firm responsible for collection of urban solid waste. Before disposing of the appliance, disconnect all water and electrical connections. Cut the electrical cable in such a way as to prevent further use. As all metal parts are stainless steel, they are therefore recyclable. Recyclable plastic parts are identified by the plastic symbol.

ECOLOGICAL ASPECTS

RECOMMENDATIONS FOR OPTIMAL USE OF ENERGY, WATER AND ADDITIVES

Use the machine fully loaded when possible
This shall prevent detergent, rinse aid, water and energy waste.

Detergent and rinse-aid
Use detergent and rinse-aid chemicals with high biodegradability, to respect the environment best. Verify the proper dosage in relation to water hardness at least once a year. Excess of product pollutes rivers and seas while an insufficient dosing will cause unsatisfactory dish washing and/or hygiene.

MAINTENANCE

Tank and boiler temperatures
The tank and boiler temperatures are set by the manufacturer in order to obtain the best washing results with detergents on the market. These may be re-set by the installer according to your detergent.

Cleaning off
Carefully remove solids off the kitchenware using water at room temperature so as to make removal of animal fats easier. To remove encrusted matter, soaking in hot water is recommended.

NOTES
Wash the objects as soon as possible in order to prevent the deposits from drying and jeopardizing the effectiveness of the washing. To get an efficient wash, it is advisable to regularly clean and maintain the machine.

Disregarding the points listed above and any information contained in this manual can cause energy, water and detergent waste with a subsequent increase in running costs and/or performance reduction.

TROUBLESHOOTING

PROBLEMS	CAUSES AND SOLUTIONS
Water exits from the rinse aid suction tube.	The suction valves 10805 and delivery do not seal due to foreign bodies in the closing seats. Clean the valves 10805, check that the rinse aid suction filter is present, and filter the water entering the dishwashwer.
The dispenser does not draw rinse aid.	The delivery valve 10805 does not seal due to foreign bodies in the closing seats. Clean the valve 10805, check that the rinse aid suction filter is present and filter the water entering the dishwasher.
	The piston seal 10806 does not hold because it is damaged. Replace the seal 10806 with an original.
	Check the diagram 10807.
The machine does not turn on.	Main switch not ON. Turn switch ON.
The machine does not load water.	Water valve shut. Open the hot and/or cold water valve.
	The spray arm nozzles or the solenoid filter are clogged and/or caked with lime deposits. Clean the rinsing arm nozzles, the pipes and the filter. Check that the water hardness is <10°f. Equip the machine with an external water softener.
	Faulty pressure switch. Replace the pressure switch (call Omcan).

TROUBLESHOOTING

Washing results are unsatisfactory.	The washing nozzles are obstructed or the rack does not rotate. Unscrew and clean the nozzles and the rotation shaft carefully, refit them correctly in their seats.
	Filters are dirty. Remove filters, clean with brush under a jet of water and replace in original position.
	Presence of foam. Always use a non-foaming detergent. Have the detergent and rinse aid dosages checked.
	Fats or starches are not removed. Detergent concentration too low.
	Check the tank temperature (it must be about 160°F - 71°C). Adjust the thermostat or check correct heating element operation.
	Length of washing cycle inadequate for type of grime build-up. Choose a longer cycle if possible, otherwise repeat wash cycle.
	Wash water too dirty. Empty water from the tank, clean filters; refill the tank and correctly refit the filters.
The objects are not dried properly.	Wrong rinse aid concentration. Have the rinse aid dosage checked.
	The rack is unsuitable for the glasses and dishes. Use a suitable rack enabling the dishes to be tilted so water can run off.
	The dishes have been too long in the tank. As soon as the wash cycle is finished, pull the rack out immediately, allowing the air to dry the glasses and dishes more quickly.
	Rinse water temperature is less than 185°F (85°C). Check the temperature of the booster thermostat. Call Omcan service to adjust.
	Surface of dishes and glasses too rough or porous for material wear. Replace type of dishes and glasses used.
Streaks and spots on glasses and dishes.	Wrong rinse aid concentration. Have the rinse aid dosage checked.
	Too hard water. Check the water quality. Water must not exceed 10°F in hardness. Equip the machine with an external water softener.
The machine suddenly stops during the cycle.	The machine is connected to an overloaded circuit. Connect the machine separately (call Omcan service).
	A safety device has been activated. Check safety devices (call Omcan service).

TROUBLESHOOTING

During wash cycle the machine stops and draws water.	Water from the previous day has not been replaced. Empty the tank and refill it.
	Faulty pressure switch. Have Omcan service check the thermostat and the pressure switch.
	The overflow tube is incorrectly positioned. Remove the overflow tube and correctly reposition it.

FIGURE DRAWINGS

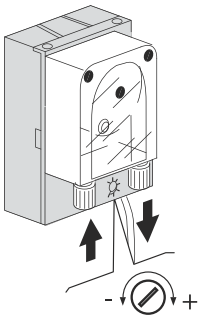

pict. 1

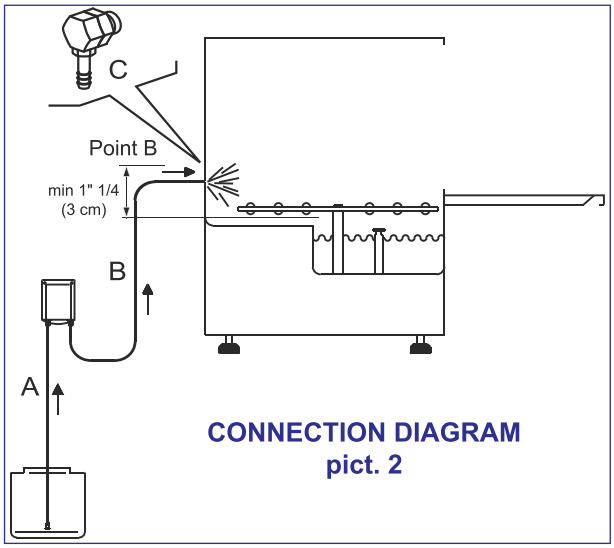

CONNECTION DIAGRAM
pict. 2

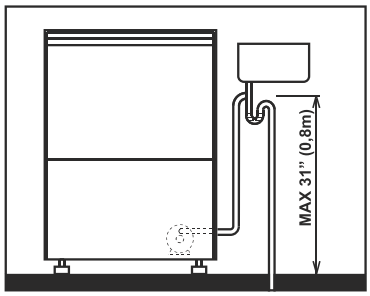

pict. 3

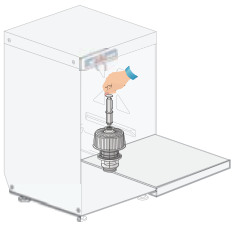

pict. 4

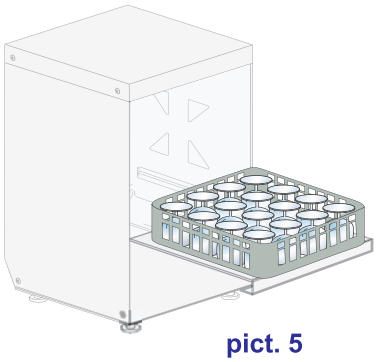

pict. 5

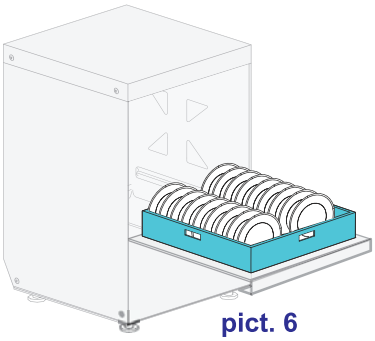

pict. 6

CONTROLS

1		ON/OFF switch 0-1
2	START	Cycle START button
3		Manual drain button (optional)
4		Wash type selector

INDICATORS

a		Power on indicator
b		Washing cycle indicator
c		Temperature indicator

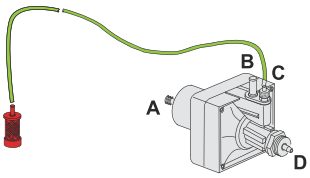

code 10799

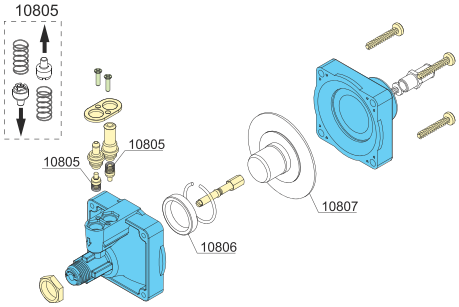

PARTS BREAKDOWN

ITEM	MODEL
49125	CD-IT-50-1

General Body

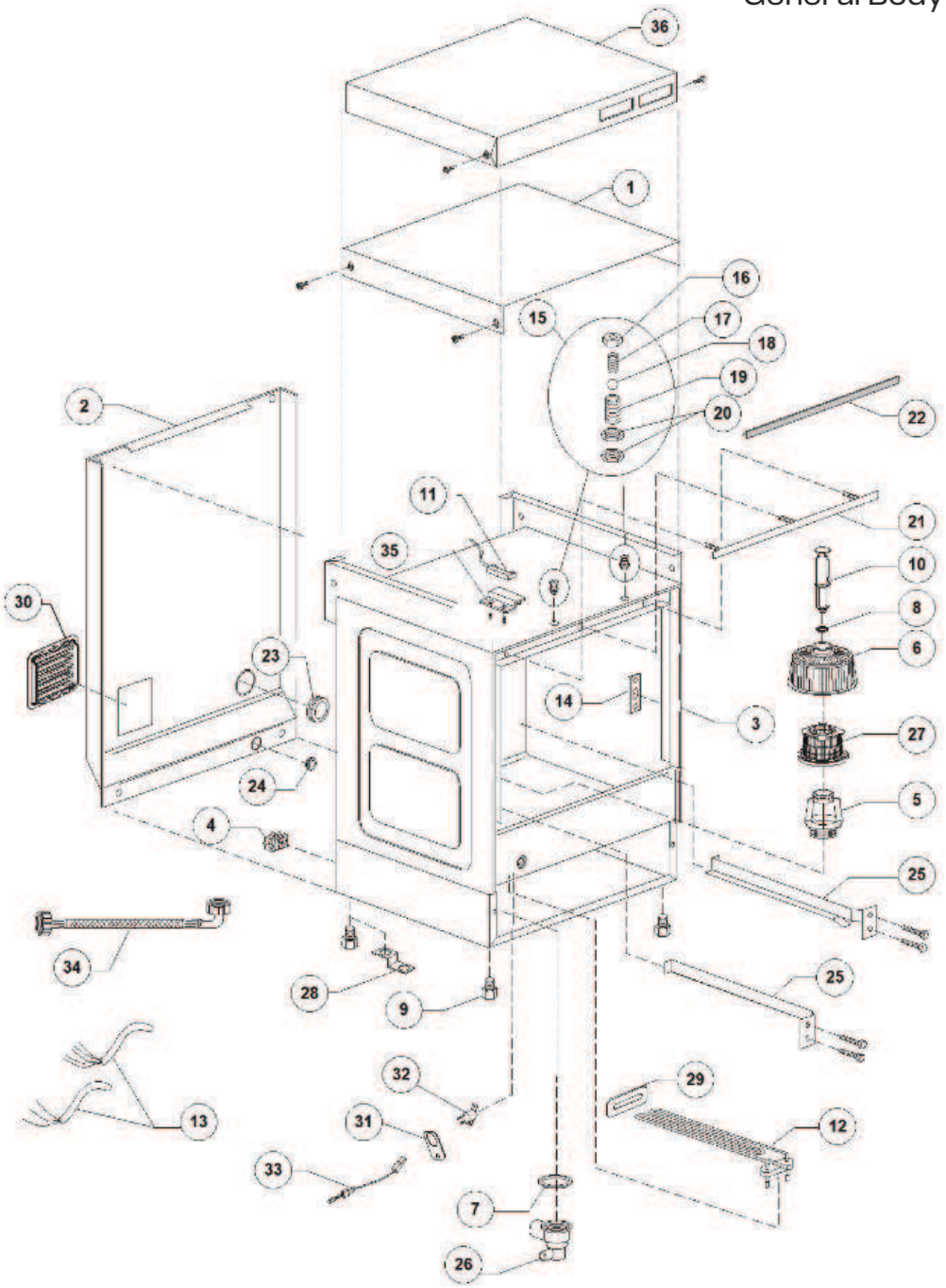

PARTS BREAKDOWN

ITEM	MODEL
49125	CD-IT-50-1

Door

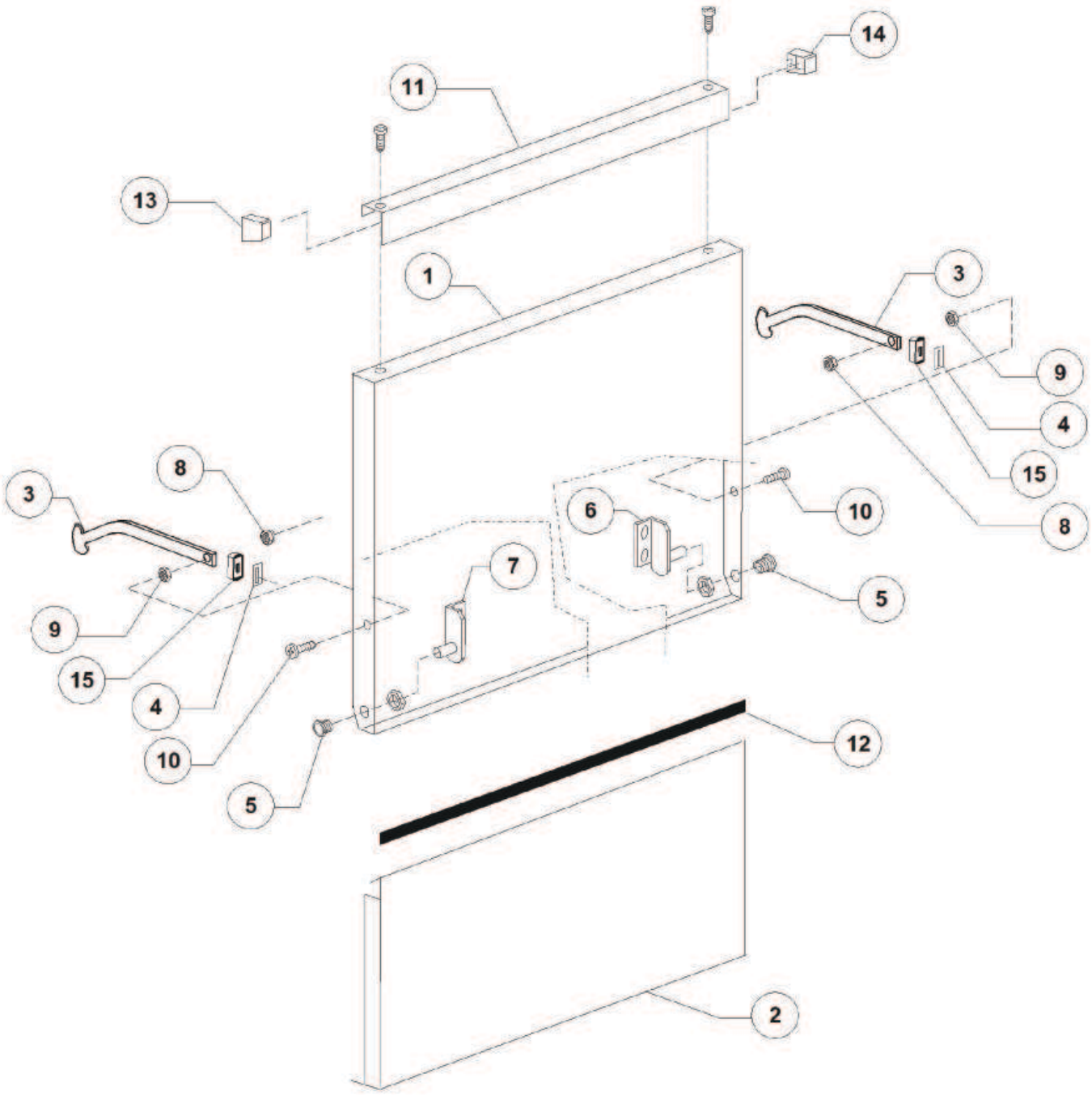

PARTS BREAKDOWN

ITEM	MODEL
49125	CD-IT-50-1

Control Panel and Switches

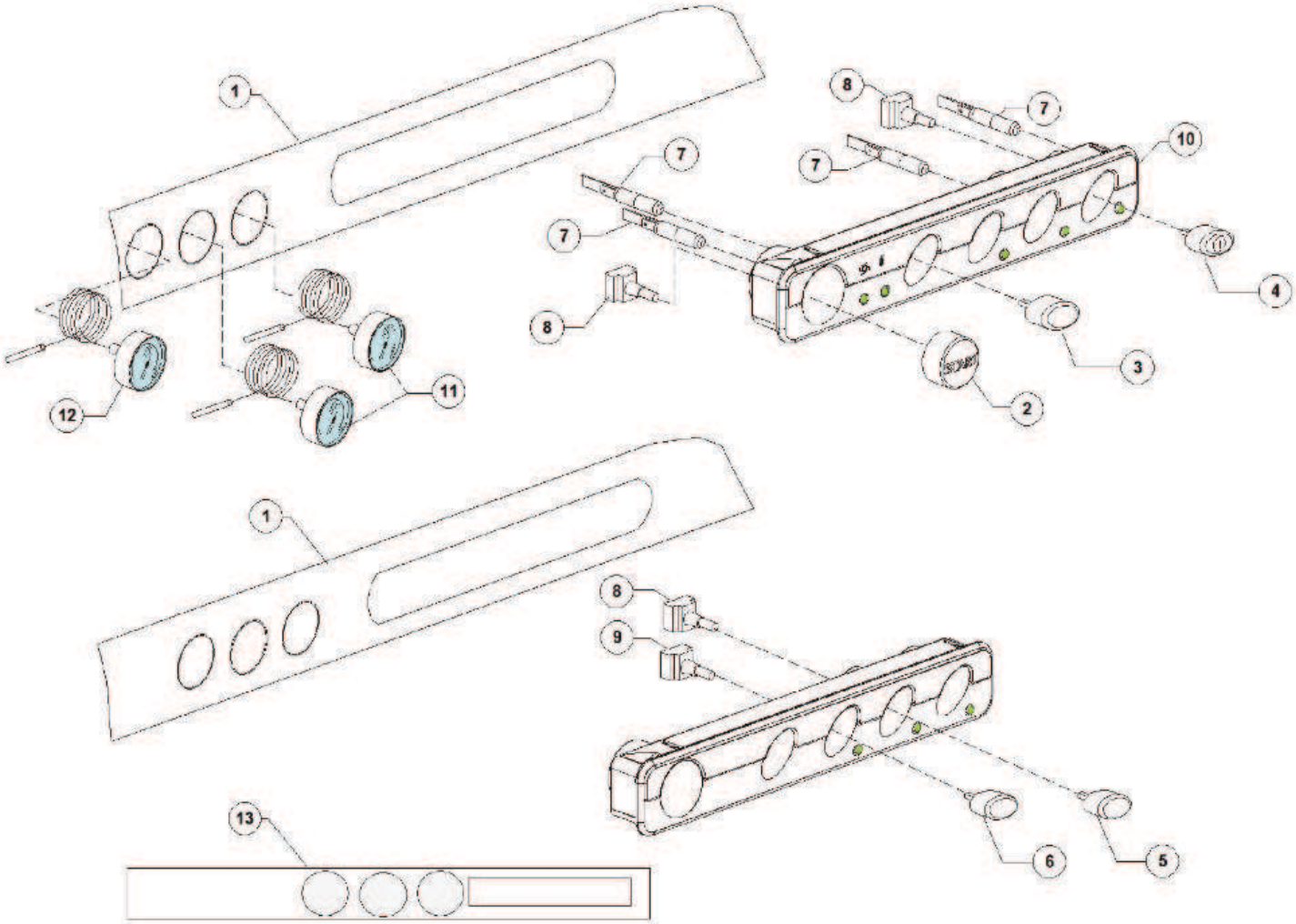

PARTS BREAKDOWN

ITEM	MODEL
49125	CD-IT-50-1

Electric Control Components

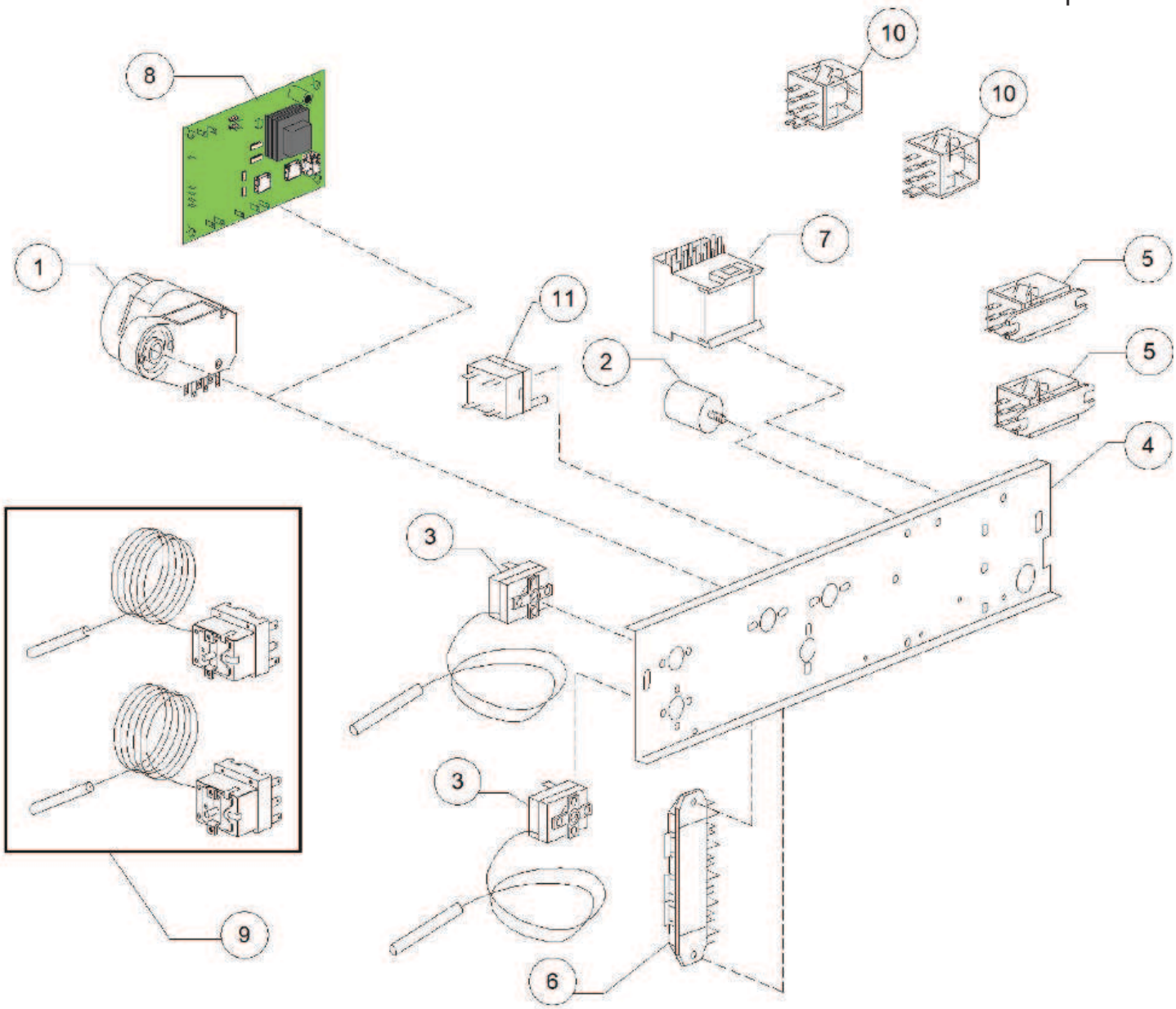

PARTS BREAKDOWN

ITEM	MODEL
49125	CD-IT-50-1

Solenoid Valve Group

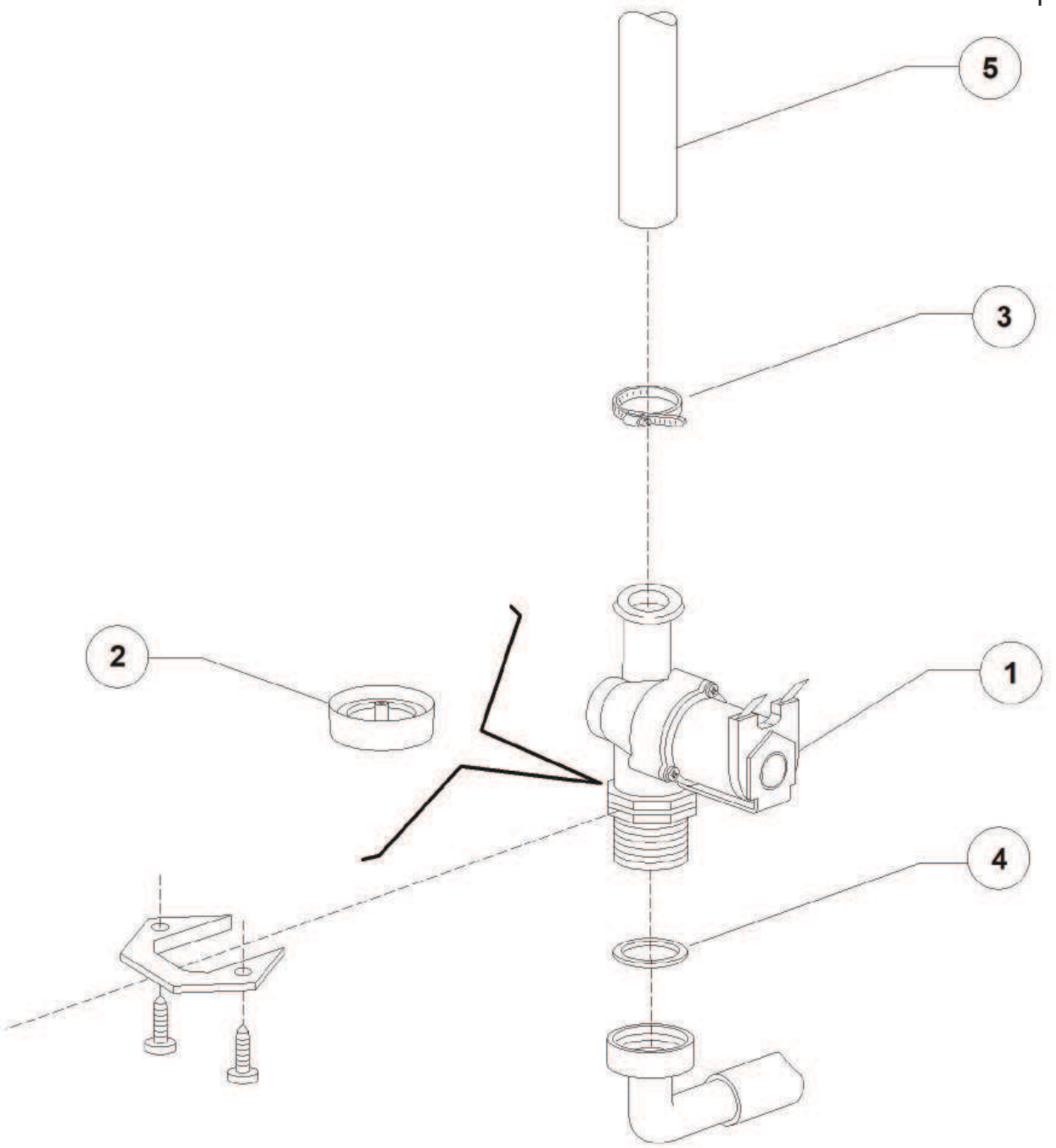

PARTS BREAKDOWN

ITEM	MODEL
49125	CD-IT-50-1

DVGW Valve

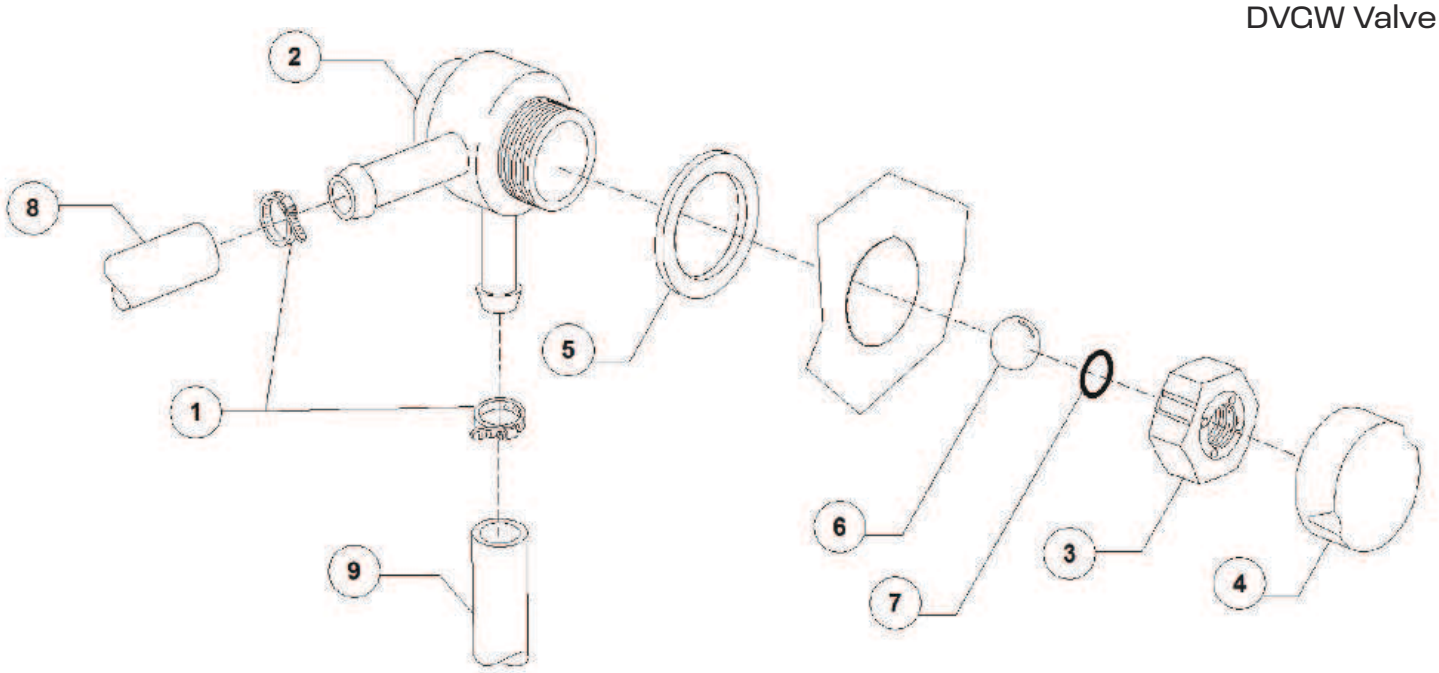

PARTS BREAKDOWN

ITEM	MODEL
49125	CD-IT-50-1

Rinse Aid Dispenser Group

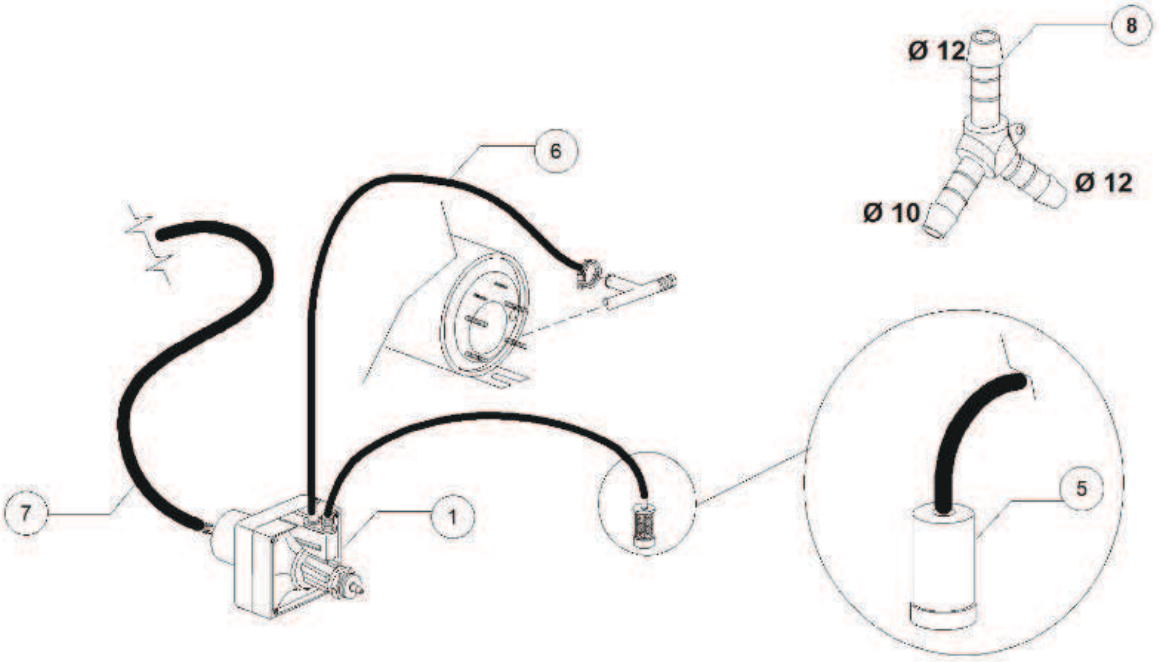

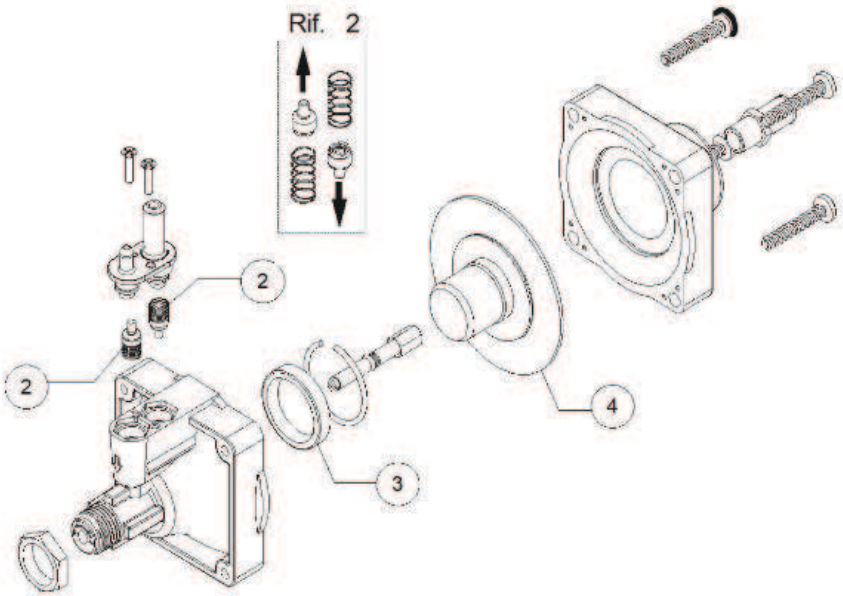

PARTS BREAKDOWN

ITEM	MODEL
49125	CD-IT-50-1

Boiler Group

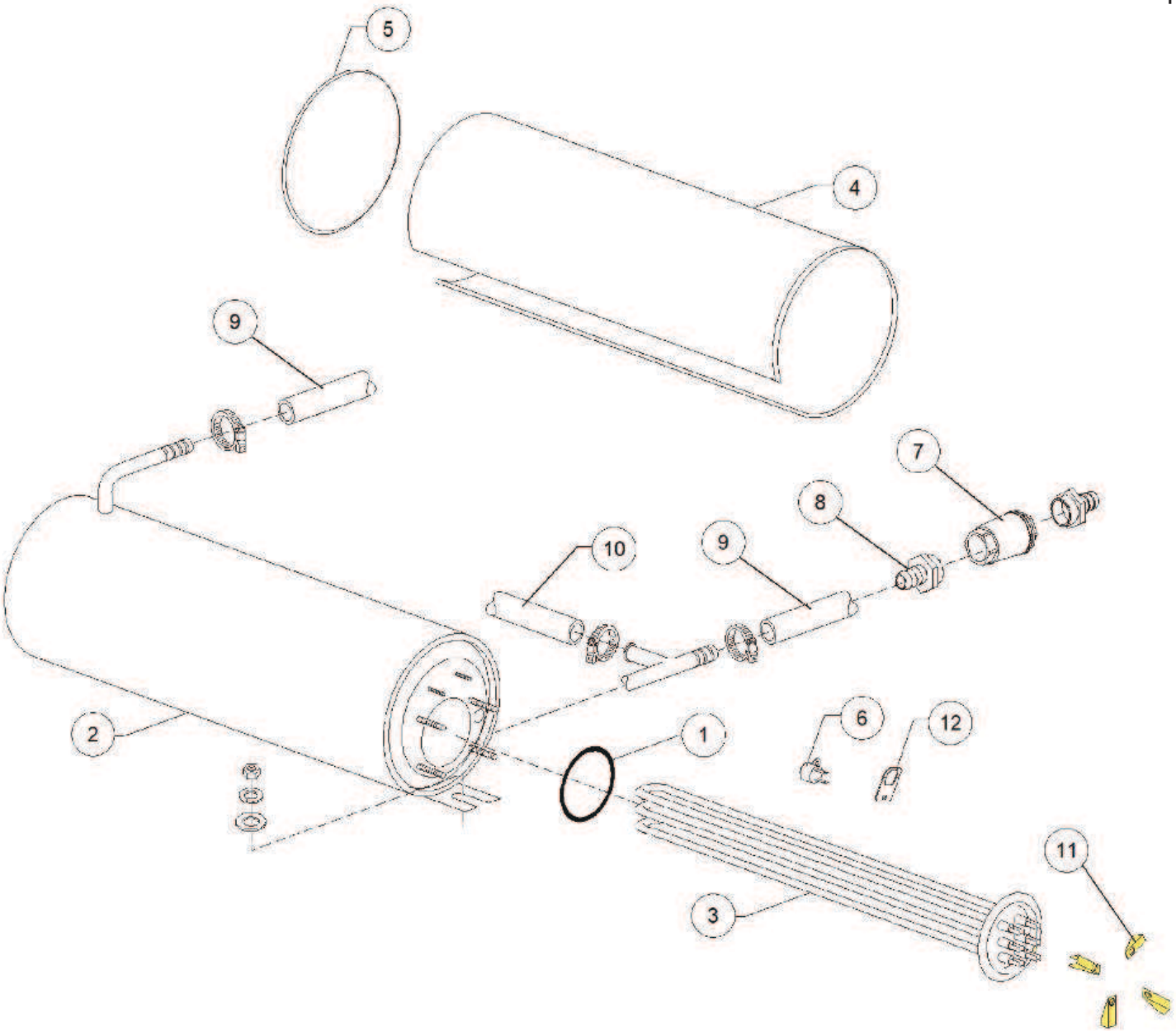

PARTS BREAKDOWN

ITEM	MODEL
49125	CD-IT-50-1

3 Ways Connection 1

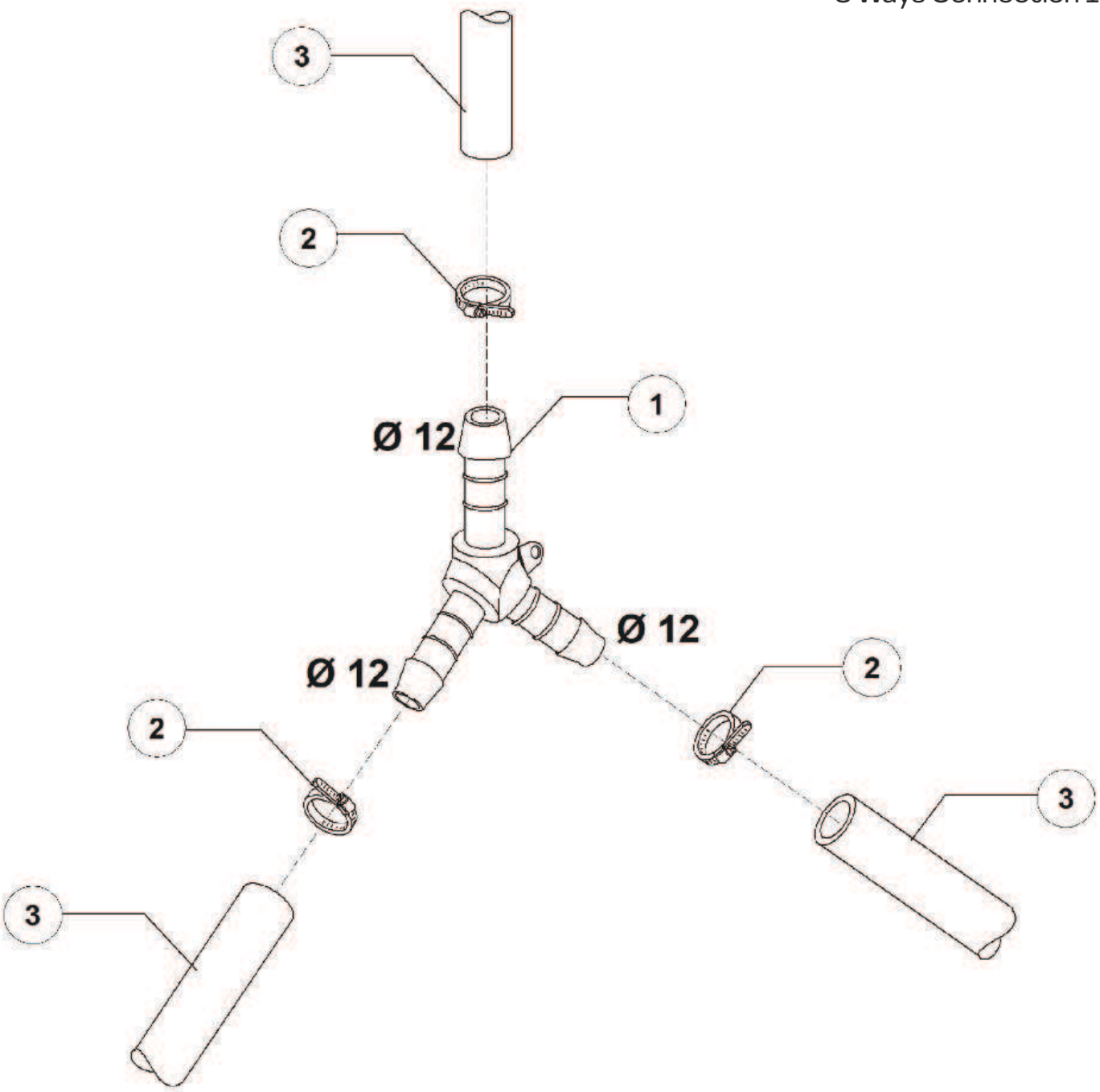

PARTS BREAKDOWN

ITEM	MODEL
49125	CD-IT-50-1

3 Ways Connection 2

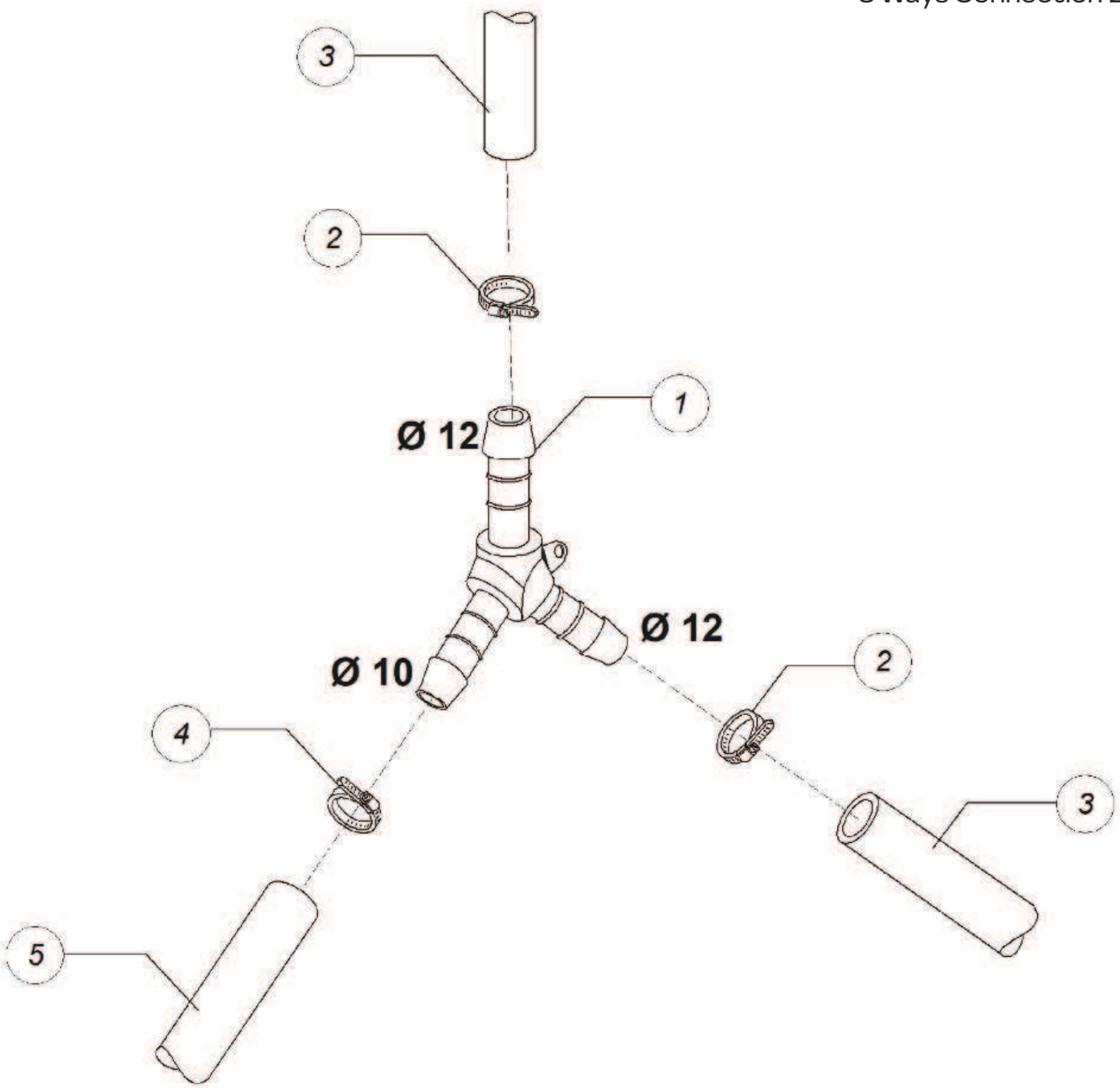

PARTS BREAKDOWN

ITEM	MODEL
49125	CD-IT-50-1

Wash Pump Group

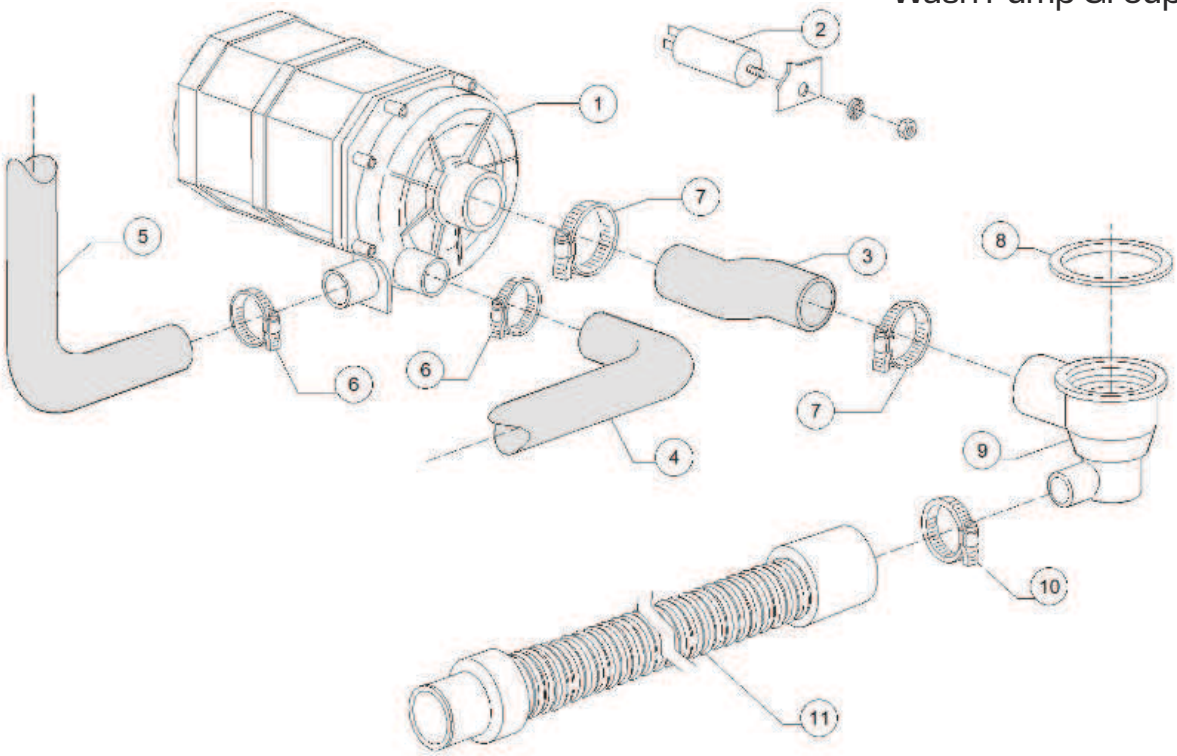

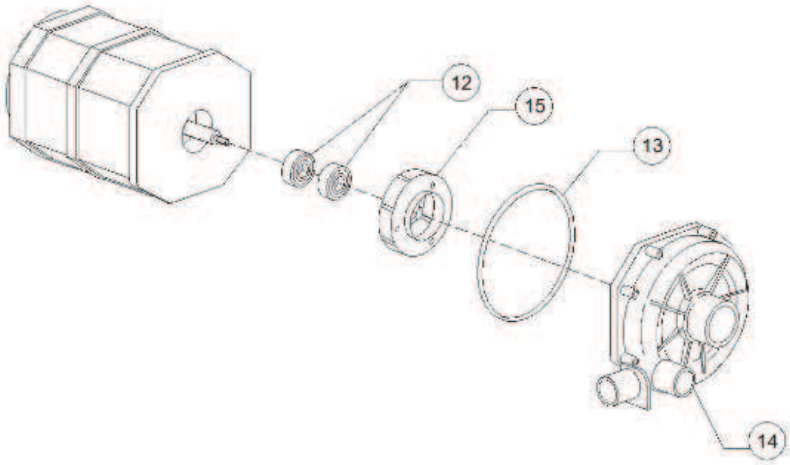

PARTS BREAKDOWN

ITEM	MODEL
49125	CD-IT-50-1

Drain Pump Group

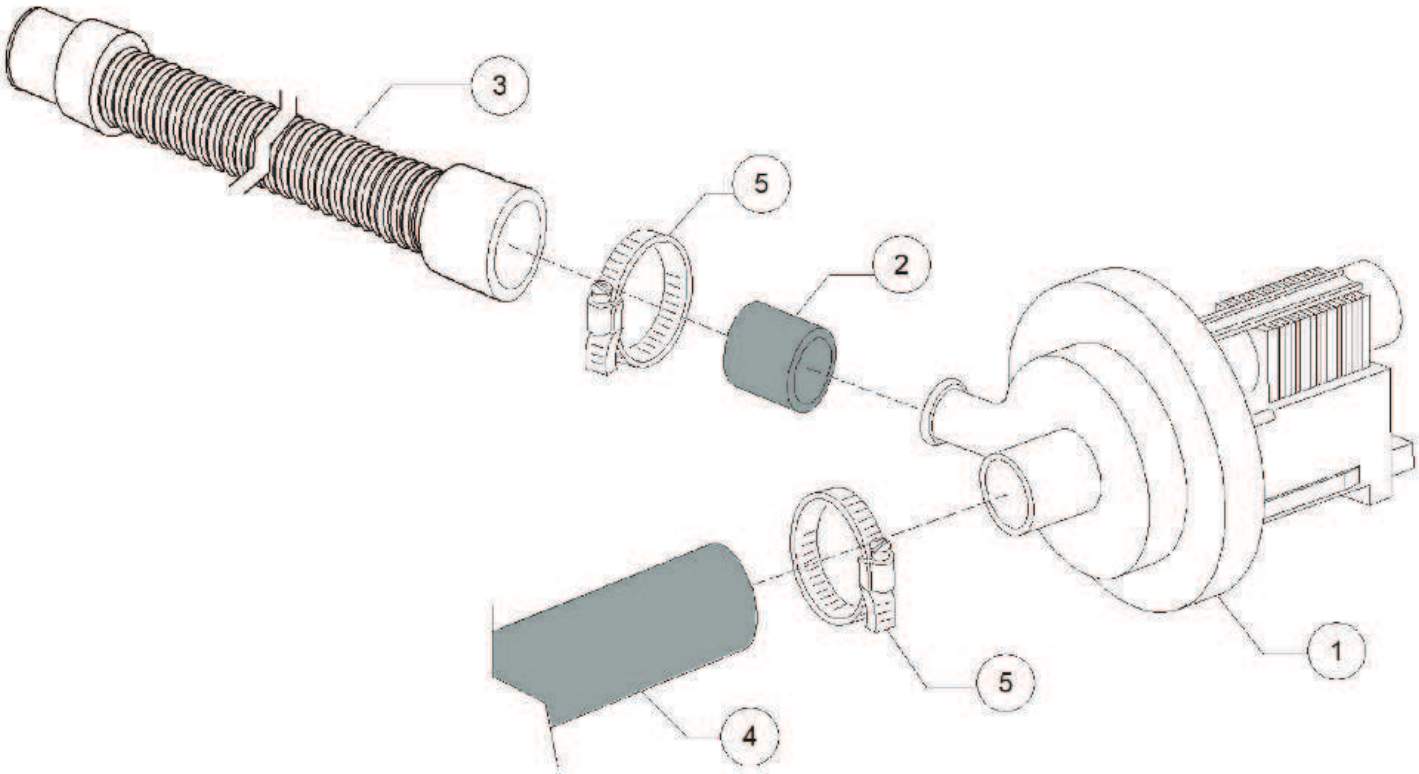

PARTS BREAKDOWN

ITEM	MODEL
49125	CD-IT-50-1

Pressure Switch Group

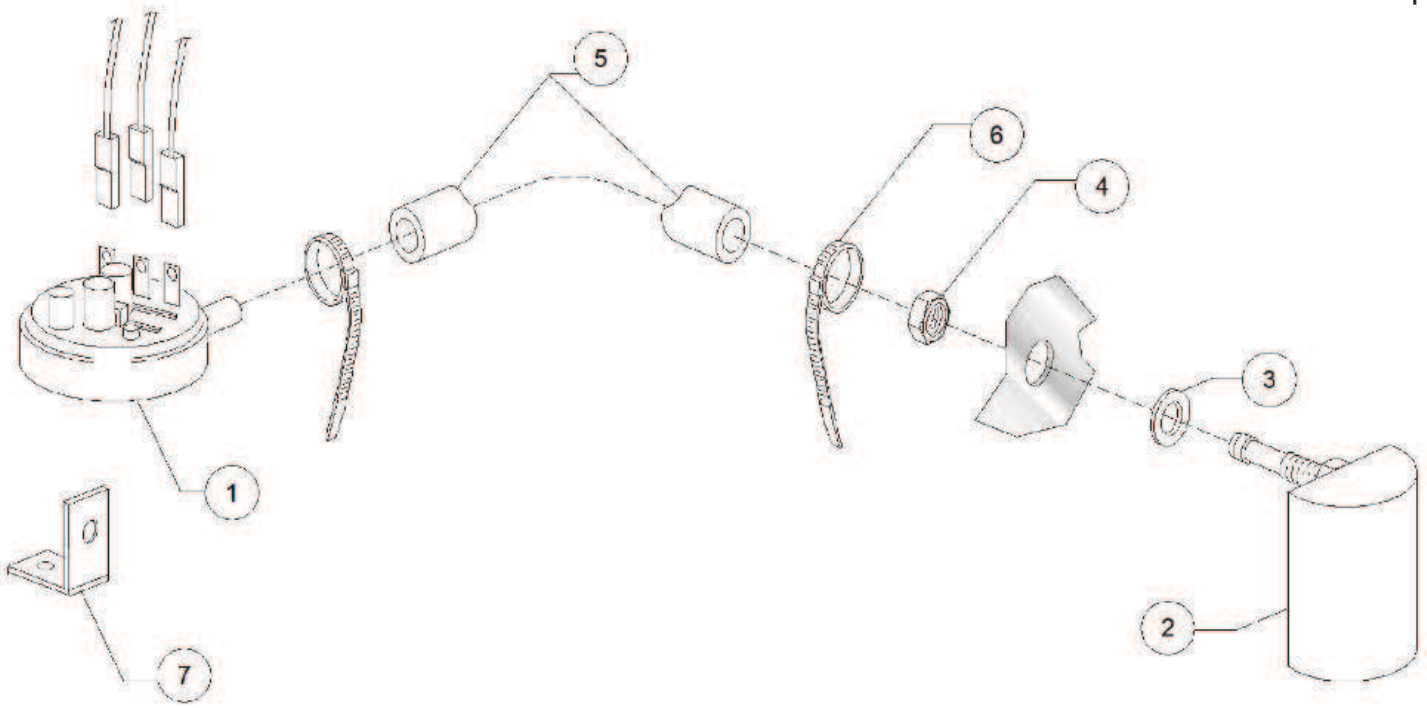

PARTS BREAKDOWN

ITEM	MODEL
49125	CD-IT-50-1

Wash Arm Group

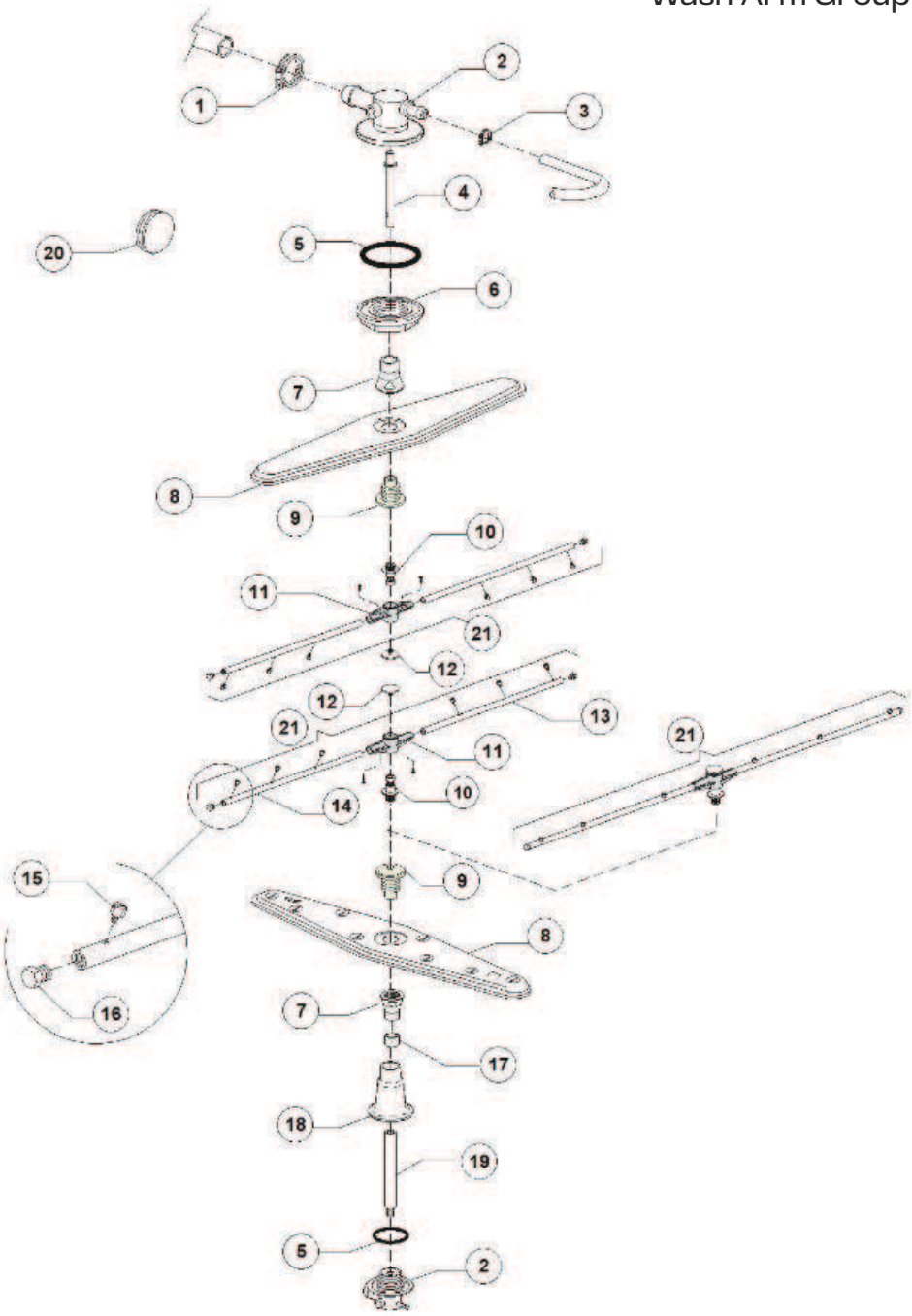

PARTS BREAKDOWN

ITEM	MODEL
49125	CD-IT-50-1

Baskets

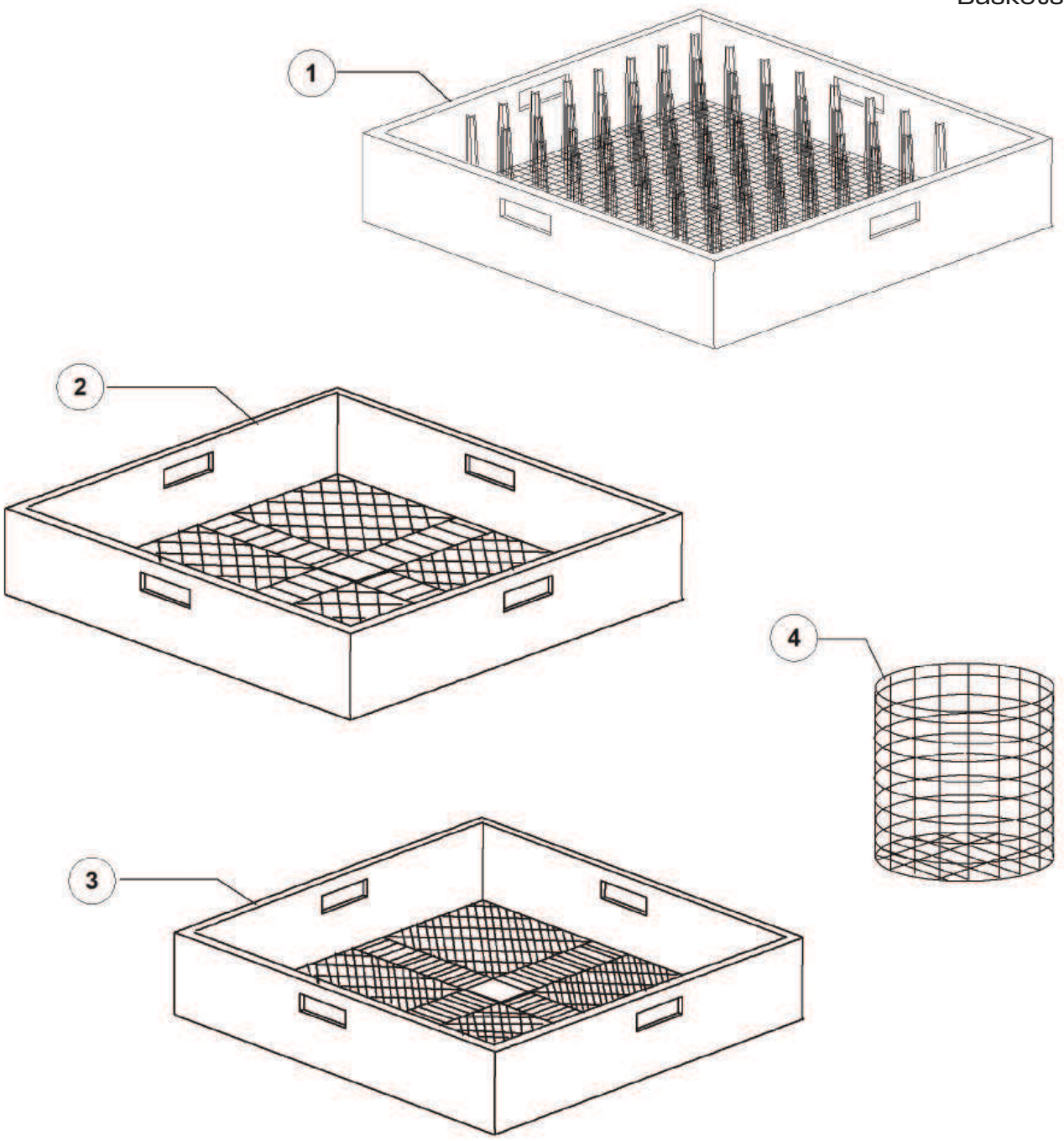

PARTS BREAKDOWN

ITEM	MODEL
49125	CD-IT-50-1

General Body

Item No.	Description	Position	Item No.	Description	Position	Item No.	Description	Position
AO477	Cover Aqua 50/80 for 49125	1	AO487	Door Microswitch UL for 49125	11	AO497	Silicone Door Seal for 49125	22
AO478	Back Panel GS50 (1x25046) for 49125	2	AO488	2700W 230V 1 F61x26 UL Heating Elem. for 49125	12	AO498	Rubber Fairlead D.40 RB38 for 49125	23
AO479	Bodywork GS50 for 49125	3	AO489	Door Rod Slide for 49125	14	AO499	Rubber Fairlead D.13 for 49125	24
AO480	Cable-Fastener with Screw for 49125	4	AO490	Door Jack Assembly for 49125	15	AO500	Right/Left Internal Slide for 49125	25
AO481	Ferrule for Filter Clutch for 49125	5	AO491	Door Jack Locknut for 49125	16	AO501	Right Side Scrap Tray for 49125	26
AO482	Suction Filter for 49125	6	AO492	Door Jack Spring for 49125	17	AO502	Inner Filter for 49125	27
AO483	Riser Gasket D.95x75x3 for 49125	7	AO493	Stainless Steel Sphere D.9,52 Spring Latch 3/8 for 49125	18	AO503	Tank Heating Element Plaque for 49125	29
AO484	Overflow Pipe Gasket Dem 40 for 49125	8	AO494	Door Jack Body for 49125	19	AO504	Ventilation Grid for 49125	30
AO485	High Adjustable Foot for 49125	9	AO495	Door Jack Nut for 49125	20	AO505	Thermostat Support for 49125	31
AO486	Overflow Pipe H187 for 49125	10	AO496	Profile for Rubber Seal GS50 for 49125	21	AO506	DVGW Load Pipe for 49125	34

Door

Item No.	Description	Position	Item No.	Description	Position	Item No.	Description	Position
AO507	Door 50/2013 for 49125	1	AO511	Brass Bush for 49125	5	AO515	Stainless Steel Nut M6 Din934 for 49125	9
AO508	Front Panel GS50 for 49125	2	AO512	Right Door Hinge for 49125	6	AO516	M6x16 TCB 13x3 Large Stainless Steel Screw for 49125	10
AO509	Arm for Door for 49125	3	AO513	Left Door Hinge for 49125	7	AO517	Stainless Steel Handle Aqua50/80 for 49125	11
AO510	Door Hinge Block for 49125	4	AO514	Stainless Steel Self-Locking Nut M6 Din982 for 49125	8	AO518	Self-Stick Mousse 20x2 for 49125	12

PARTS BREAKDOWN

ITEM	MODEL
49125	CD-IT-50-1

Control Panel and Switches

Item No.	Description	Position	Item No.	Description	Position	Item No.	Description	Position
AO519	Control Panel GS50 USA Electric Timer for 49125	1	AO523	Int.Bip.2 Times DIHR/2014 UL for 49125	5	AO527	Gray 5-Hole Push Button Panel 2022 for 49125	10
AO520	Initial Uni.Clean Start DIHR/2014 UL for 49125	2	AO524	Pul.Uni. P.S. DIHR/2014 UL for 49125	6	AO528	Thermometer UL Arthermo for 49125	11
AO521	Fixed Key without Indicator DIHR/2014 for 49125	3	AO525	White Pilot Light 220V for 49125	7	AO529	Manometer UL for 49125	12
AO522	Int.Bip.On/Off DIHR/2014 UL for 49125	4	AO526	16A Switch UL for 49125	9			

Electric Control Components

Item No.	Description	Position	Item No.	Description	Position	Item No.	Description	Position
AM506	Thermostat 0-90 TR2 C1500+PVC Post.N/ALB for 49125	3	AO531	Contactor 36A/20A 3NA 230V 50-60Hz for 49125	7	AM507	Safety Thermostat 110 1500PVC for 49125	11
AO530	Terminal Board 6 Poles FV122 Red for 49125	6	AO532	90-120-180 Electronic Timer for 49125	8			

Solenoid Valve Group

Item No.	Description	Position	Item No.	Description	Position	Item No.	Description	Position
AO533	Single Solenoid Valve H20 230V for 49125	1	AO535	Gasket 3/4 Load H20 Dis.LS061 for 49125	4	AO537	11,5x19 EPDM Rubber Hose for 49125	5
AO534	Clamp 12/22 AISI 430 for 49125	3	AO536	9,5x16 EPDM Rubber Hose for 49125	5			

DVGW Valve

Item No.	Description	Position	Item No.	Description	Position	Item No.	Description	Position
AO534	Clamp 12/22 AISI 430 for 49125	1	AO540	Valve Nut Cover for 49125	4	AO543	O-Ring 115 KTW for 49125	7
AO538	Drain Valve Center Body for 49125	2	AO541	Valve Gasket for 49125	5	AO536	9,5x16 EPDM Rubber Hose for 49125	8, 9
AO539	Valve Nut for 49125	3	AO542	"5/8" Ball for DVGW Valve 07 for 49125	6	AO537	11,5x19 EPDM Rubber Hose for 49125	8, 9

PARTS BREAKDOWN

ITEM	MODEL
49125	CD-IT-50-1

Rinse Aid Dispenser Group

Item No.	Description	Position	Item No.	Description	Position	Item No.	Description	Position
AO544	Rinse Aid Dosing Pump for 49125	1	AO547	Membrane for Dosing Pump for 49125	4	AO536	9,5x16 EPDM Rubber Hose for 49125	7
AO545	Tecnopro Non Return Valve for 49125	2	AO548	Small Filter for 49125	5	AO550	Y-Piece D.10-12-12 for 49125	8
AO546	Gasket D.22 for 49125	3	AO549	8x15 EPDM Pipe for 49125	6			

Boiler Group

Item No.	Description	Position	Item No.	Description	Position	Item No.	Description	Position
AO551	O-Ring 151 NBR for 49125	1	AO555	Insulating Disk D.138 for 49125	5	AO557	Heating Element Mounting Bracket D.6,3 for 49125	11
AO552	Boiler 50 (AISI 304) for 49125	2	AO556	Klixon Safety Thermostat for 49125	6	AO505	Thermostat Support for 49125	12
AO553	6000/6530W 230/240V 3 UL Heating Elem. for 49125	3	AO537	11,5x19 EPDM Rubber Hose for 49125	9			
AO554	Boiler Insulating G500 for 49125	4	AO549	8x15 EPDM Pipe for 49125	10			

3 Ways Connection 1

Item No.	Description	Position	Item No.	Description	Position	Item No.	Description	Position
AO558	Plastic Y-Piece D.12 for 49125	1	AO534	Clamp 12/22 AISI 430 for 49125	2	AO537	11,5x19 EPDM Rubber Hose for 49125	3

3 Ways Connection 2

Item No.	Description	Position	Item No.	Description	Position	Item No.	Description	Position
AO550	Y-Piece D.10-12-12 for 49125	1	AO537	11,5x19 EPDM Rubber Hose for 49125	3	AO536	9,5x16 EPDM Rubber Hose for 49125	5
AO534	Clamp 12/22 AISI 430 for 49125	2	AO559	Clamp 8/16 AISI 430 for 49125	4			

PARTS BREAKDOWN

ITEM	MODEL
49125	CD-IT-50-1

Wash Pump Group

Item No.	Description	Position	Item No.	Description	Position	Item No.	Description	Position
AO560	Pump-UL HP0.7 230V/60Hz for 49125	1	AO565	Clamp 25/40 AISI 430 for 49125	6	AO567	Drain Hose 1,5MT D.24 for 49125	11
AO561	12,5 UF Condenser for 49125	2	AO566	Clamp 50/70 AISI 430 for 49125	7	AO568	Rotating Seals for 49125	12
AO562	Suction Pipe Coupling for 49125	3	AO483	Riser Gasket D.95x75x3 for 49125	8	AO569	OR Pump O-Ring for 49125	13
AO563	Lower Wash Pipe Coupling for 49125	4	AO501	Right Side Scrap Tray for 49125	9	AO570	Scroll for 49125	14
AO564	Top Delivery Pipe GS50 for 49125	5	AO534	Clamp 12/22 AISI 430 for 49125	10	AO571	Pump Rotor 0,75HP D.77 (DW150933) for 49125	15

Drain Pump Group

Item No.	Description	Position	Item No.	Description	Position	Item No.	Description	Position
AO572	Drain Pump-UL 230V/60Hz for 49125	1	AO567	Drain Hose 1,5MT D.24 for 49125	3	AO565	Clamp 25/40 AISI 430 for 49125	5
AO573	Pipe Coupling 28x22 L21 for 49125	2	AO574	D.28 EPDM Pipe for 49125	4			

Pressure Switch Group

Item No.	Description	Position	Item No.	Description	Position	Item No.	Description	Position
AO575	Pressure Switch 47-28 UL for 49125	1	AO578	Stainless Steel Nut M8 Din934 for 49125	4	AO581	Pressure Switch Support for 49125	7
AO576	Grey Air Trap Assembly L75 for 49125	2	AO579	EPDM Hose 4.5x9 for Pressure Switch for 49125	5			
AO577	O-Ring Rolmart D14x8x1,5 for 49125	3	AO580	Plastic Clamp 98x2,5 for 49125	6			

PARTS BREAKDOWN

ITEM	MODEL
49125	CD-IT-50-1

Wash Arm Group

Item No.	Description	Position	Item No.	Description	Position	Item No.	Description	Position
AO565	Clamp 25/40 AISI 430 for 49125	1	AO587	Stainless Steel Wash Rotor for 49125	8	AO594	Stainless Steel Rinse Nozzle M5 for 49125	15
AO582	Wash Arms Lower / Upper Support GS for 49125	2	AO588	Plastic Ring Nut for Stainless Steel Rotor for 49125	9	AO595	Rinse Arm Plug for 49125	16
AO534	Clamp 12/22 AISI 430 for 49125	3	AO589	Rinse Axle 03 for 49125	10	AO596	Rotor Hub/Pipe Coupling Spacer for 49125	17
AO583	Rinse Upper Axe D.16x40 Stainless Steel Rotor 05 for 49125	4	AO590	Hub for Rinse Rotor 03 for 49125	11	AO597	Lower Pipe Coupling L122 for 49125	18
AO584	6225 O-Ring 160 NBR for 49125	5	AO591	Rinse Arm Screw for 49125	12	AO598	Lower Rinse Axle D.16x136 Stainless Steel Rotor 05 for 49125	19
AO585	Fastening Ring Nut for Turret for 49125	6	AO592	Right Rinse Arm Stainless Steel Nozzles/03 for 49125	13	AO599	Upper/Lower Stainless Steel Rinse Assembly 03 for 49125	21
AO586	Hub for Plastic Rotor 05 for 49125	7	AO593	Left Rinse Arm Stainless Steel Nozzles/03 for 49125	14			

Baskets

Item No.	Description	Position	Item No.	Description	Position
AO600	Plastic Plates Basket 500x500 for 49125	1	AO602	Cutlery Basket - Tight Mesh (Plastic) for 49125	3
AO601	500x500 Large Mesh Glass Basket for 49125	2	AO603	Cutlery Basket for 49125	4

PARTS BREAKDOWN

ITEM	MODEL
49126	CD-IT-50-2

General Body

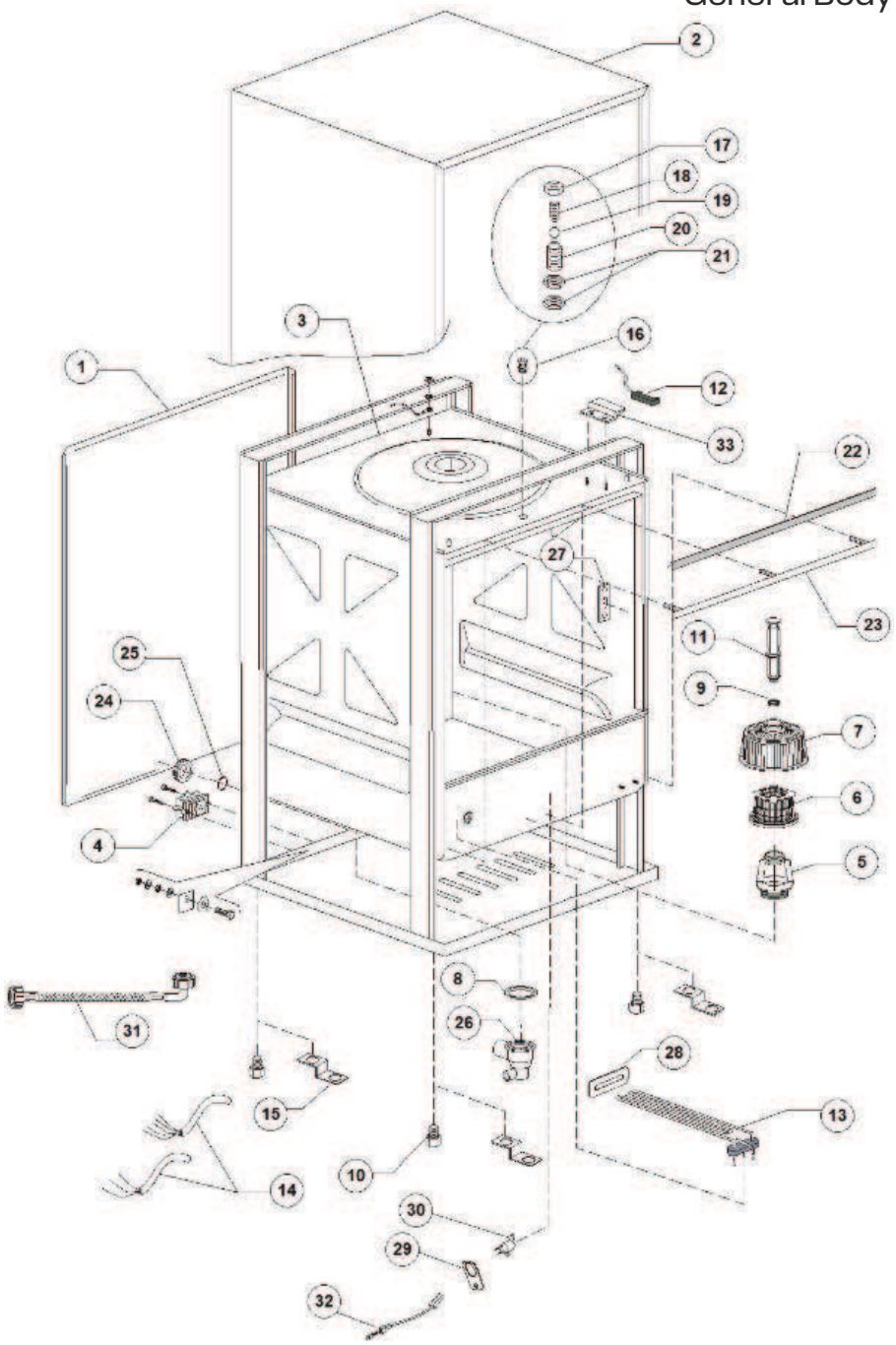

PARTS BREAKDOWN

ITEM	MODEL
49126	CD-IT-50-2

Door

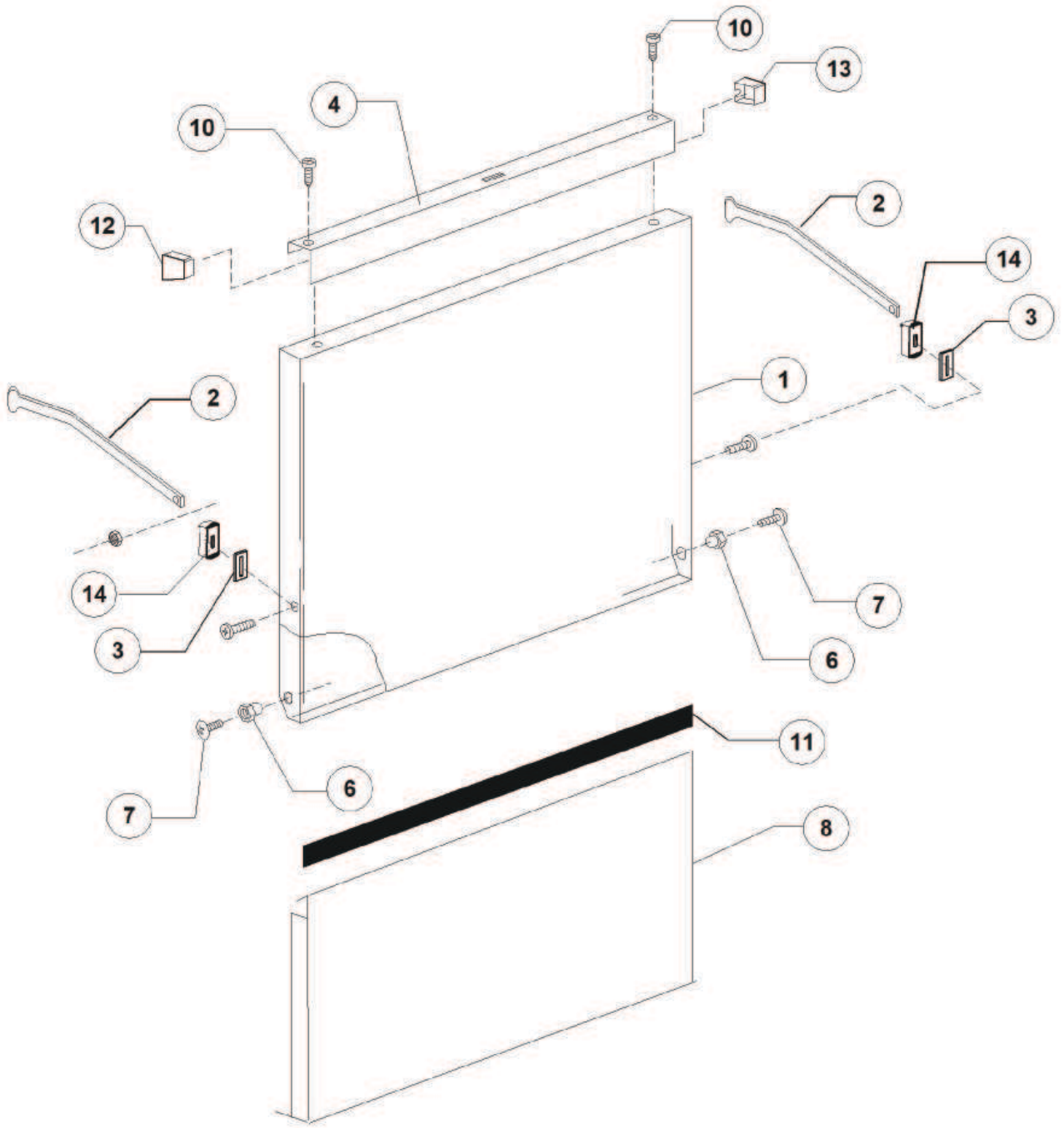

PARTS BREAKDOWN

ITEM	MODEL
49126	CD-IT-50-2

Control Panel and Switches

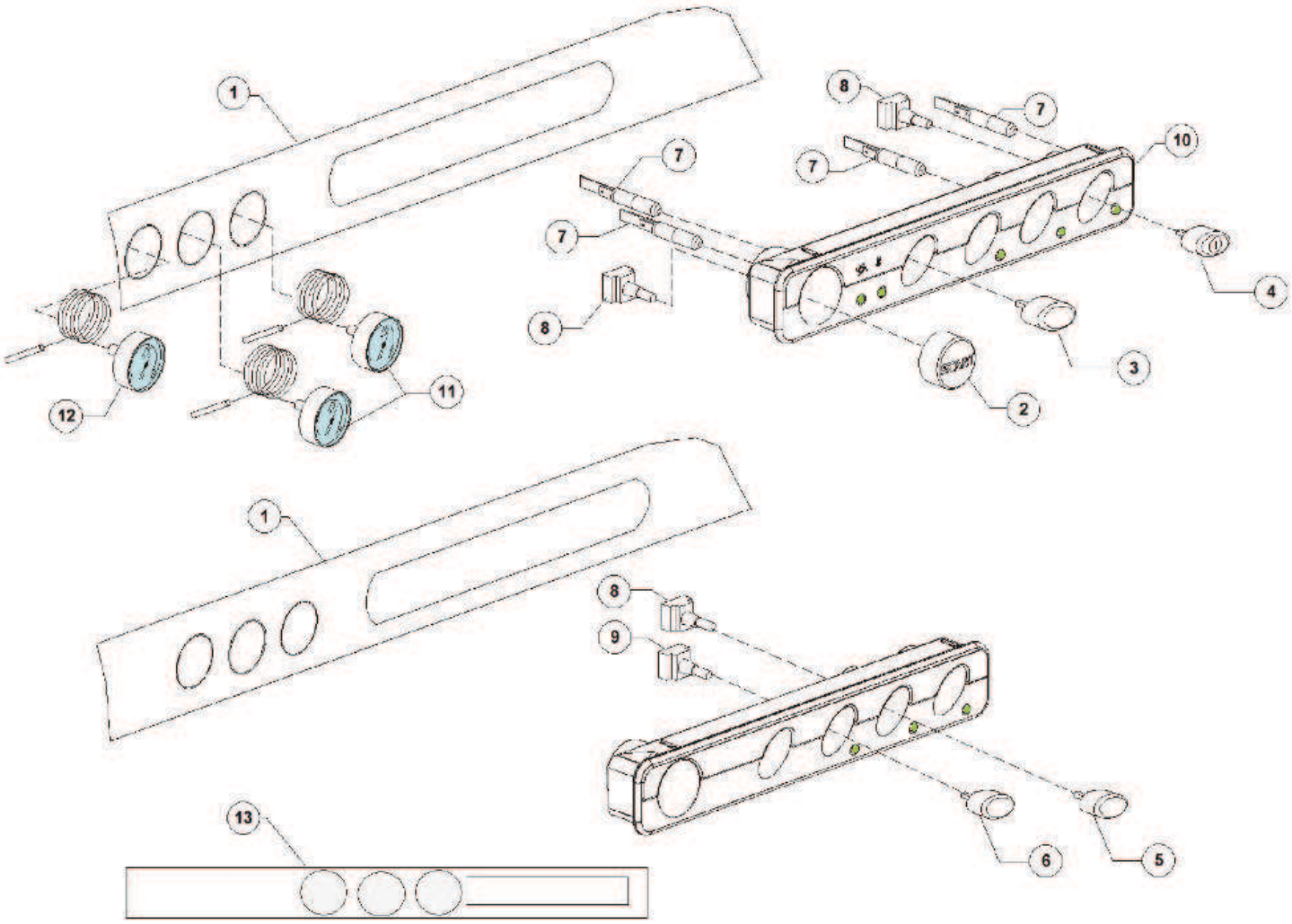

PARTS BREAKDOWN

ITEM	MODEL
49126	CD-IT-50-2

Electric Control Components

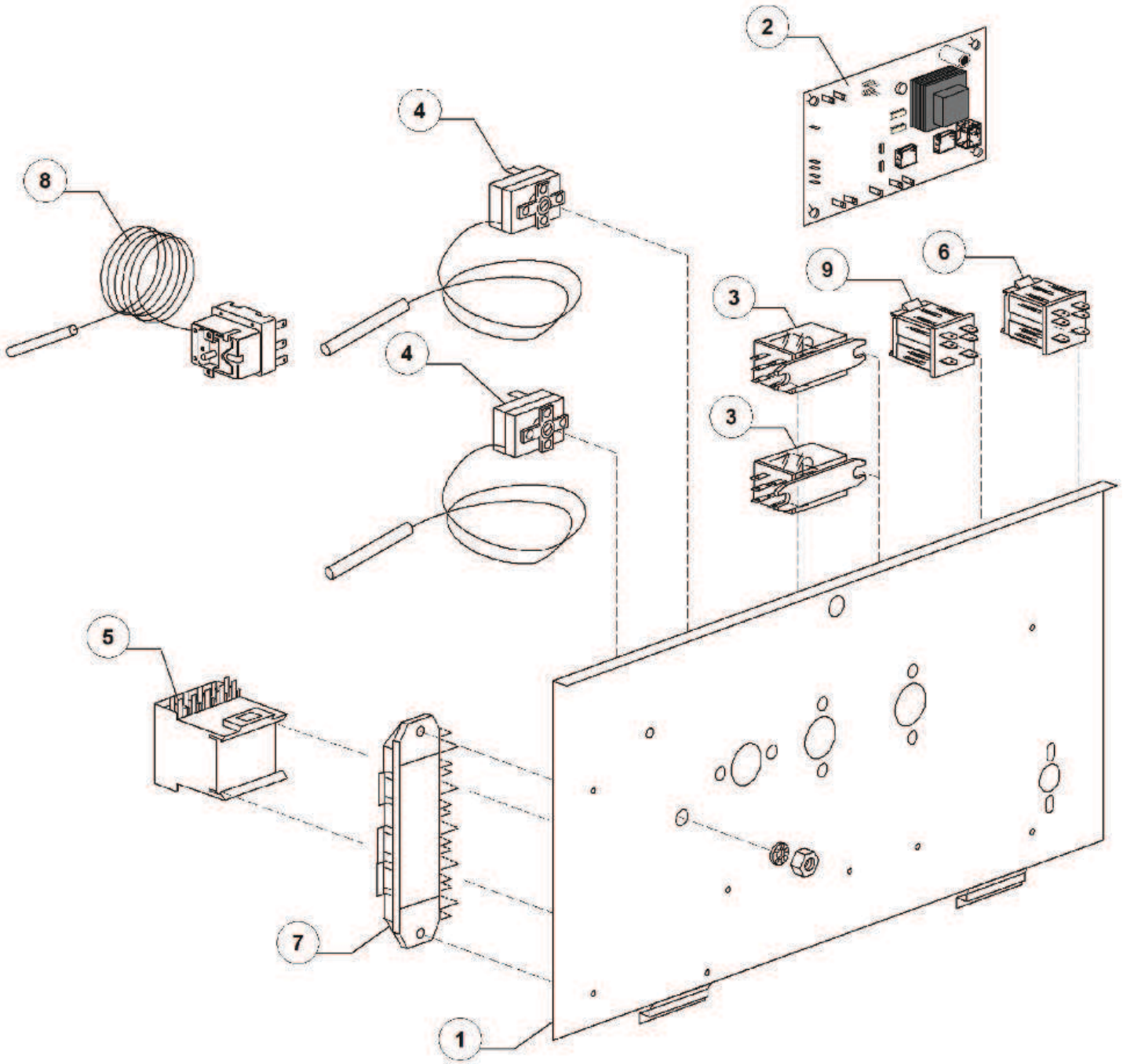

PARTS BREAKDOWN

ITEM	MODEL
49126	CD-IT-50-2

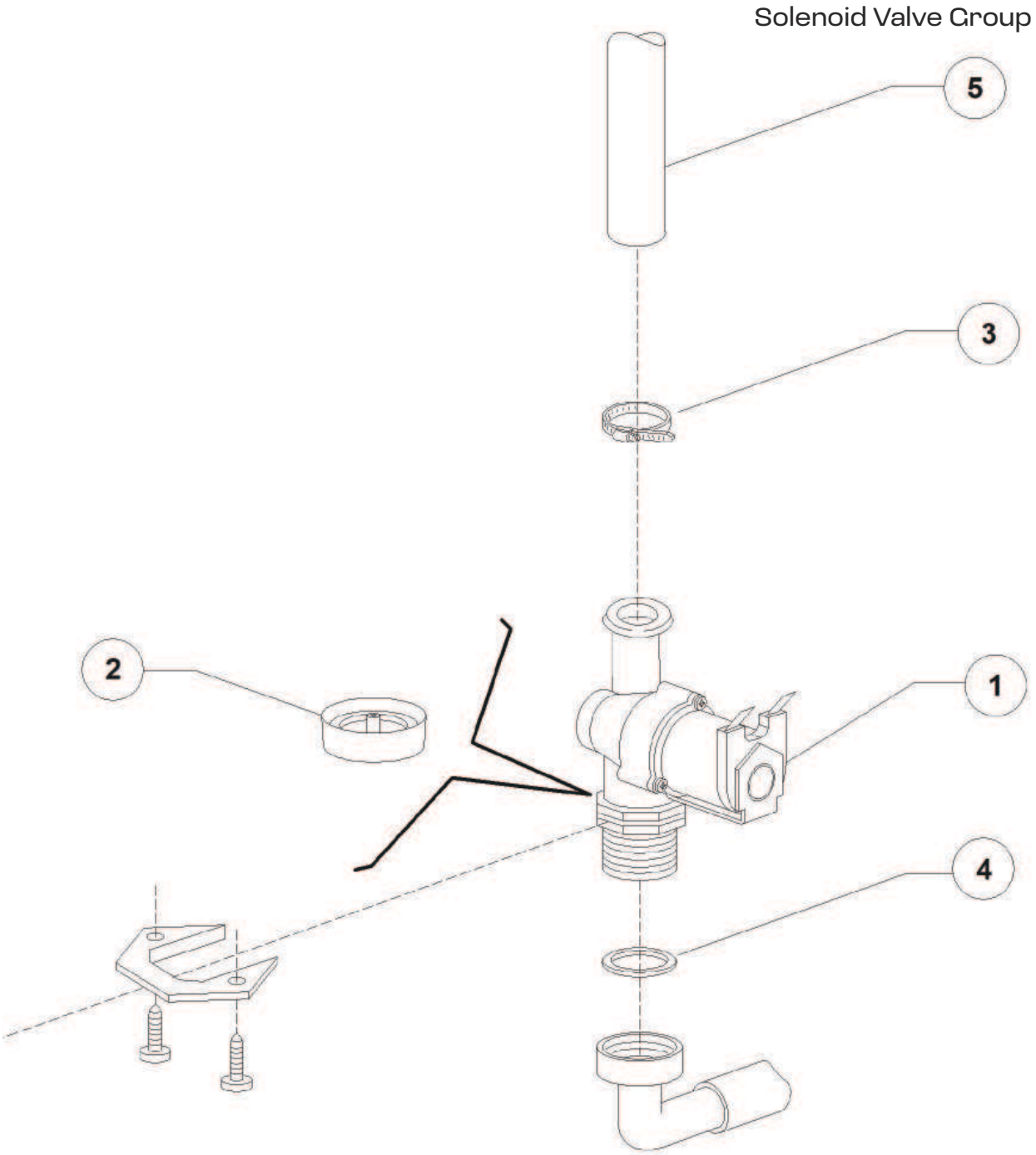

PARTS BREAKDOWN

ITEM	MODEL
49126	CD-IT-50-2

DVGW Valve

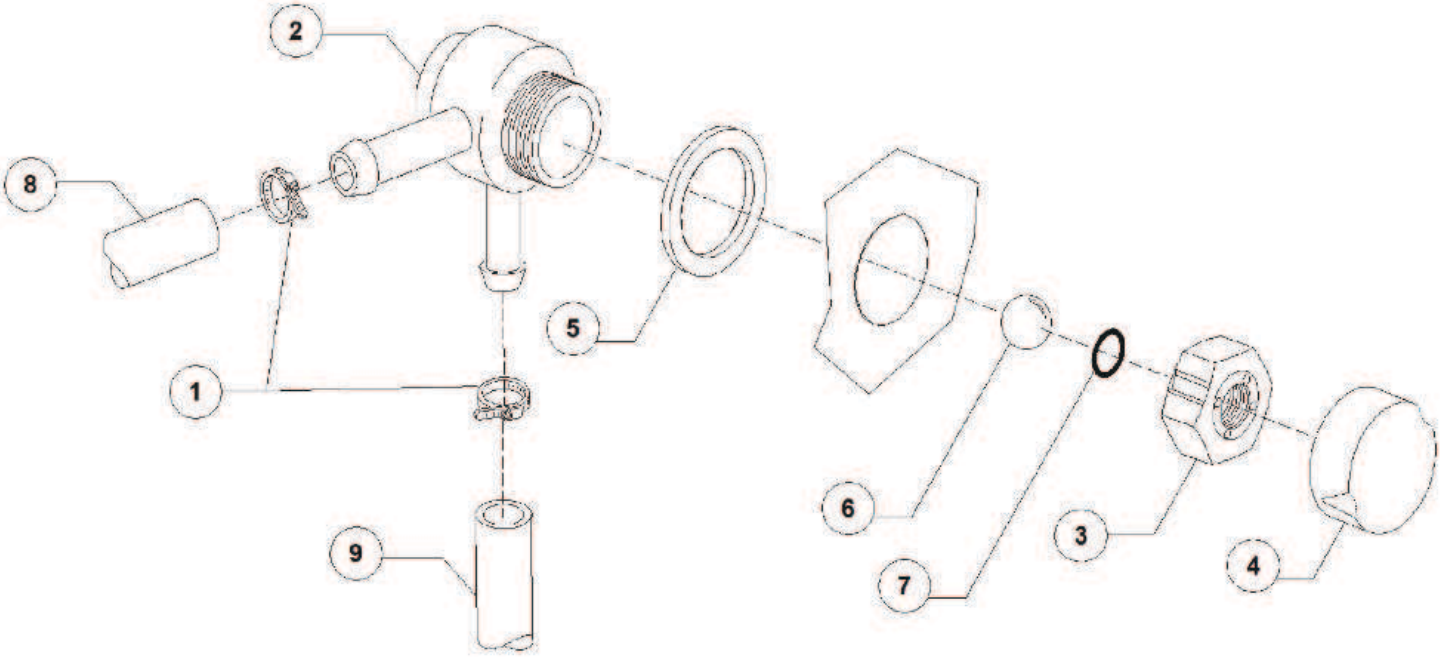

PARTS BREAKDOWN

ITEM	MODEL
49126	CD-IT-50-2

Rinse Aid Dispenser Group

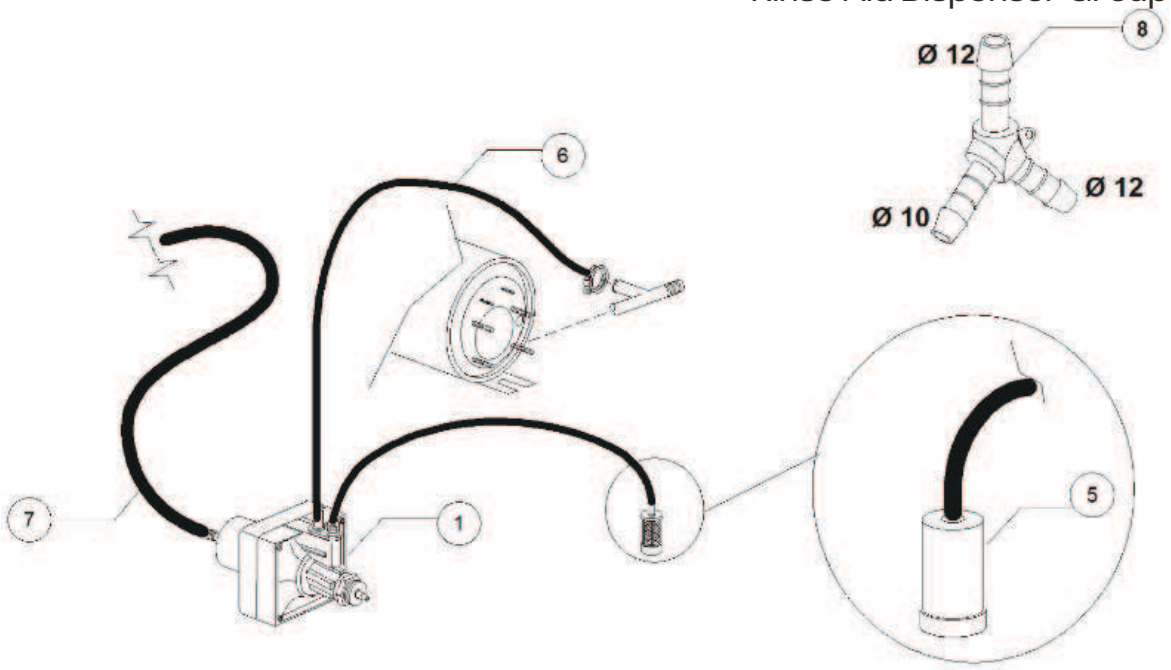

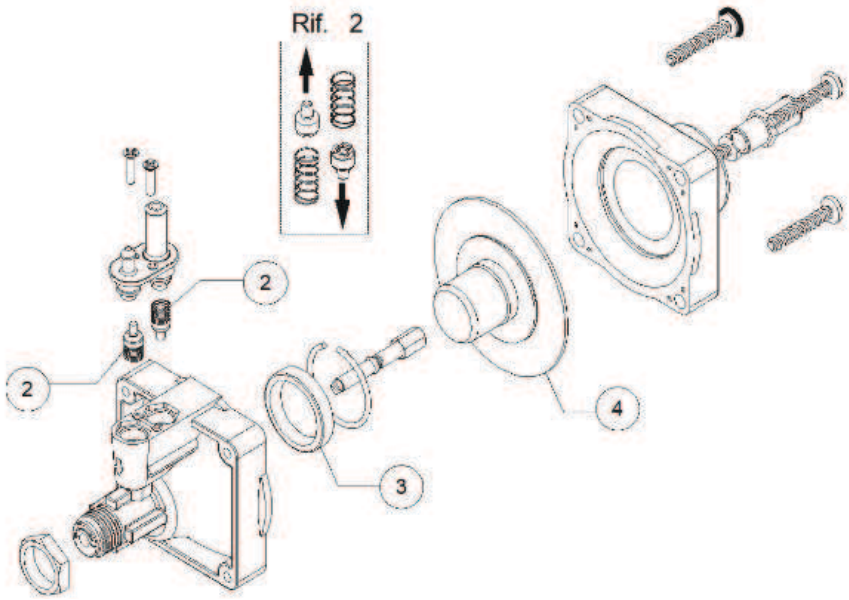

PARTS BREAKDOWN

ITEM	MODEL
49126	CD-IT-50-2

Boiler Group

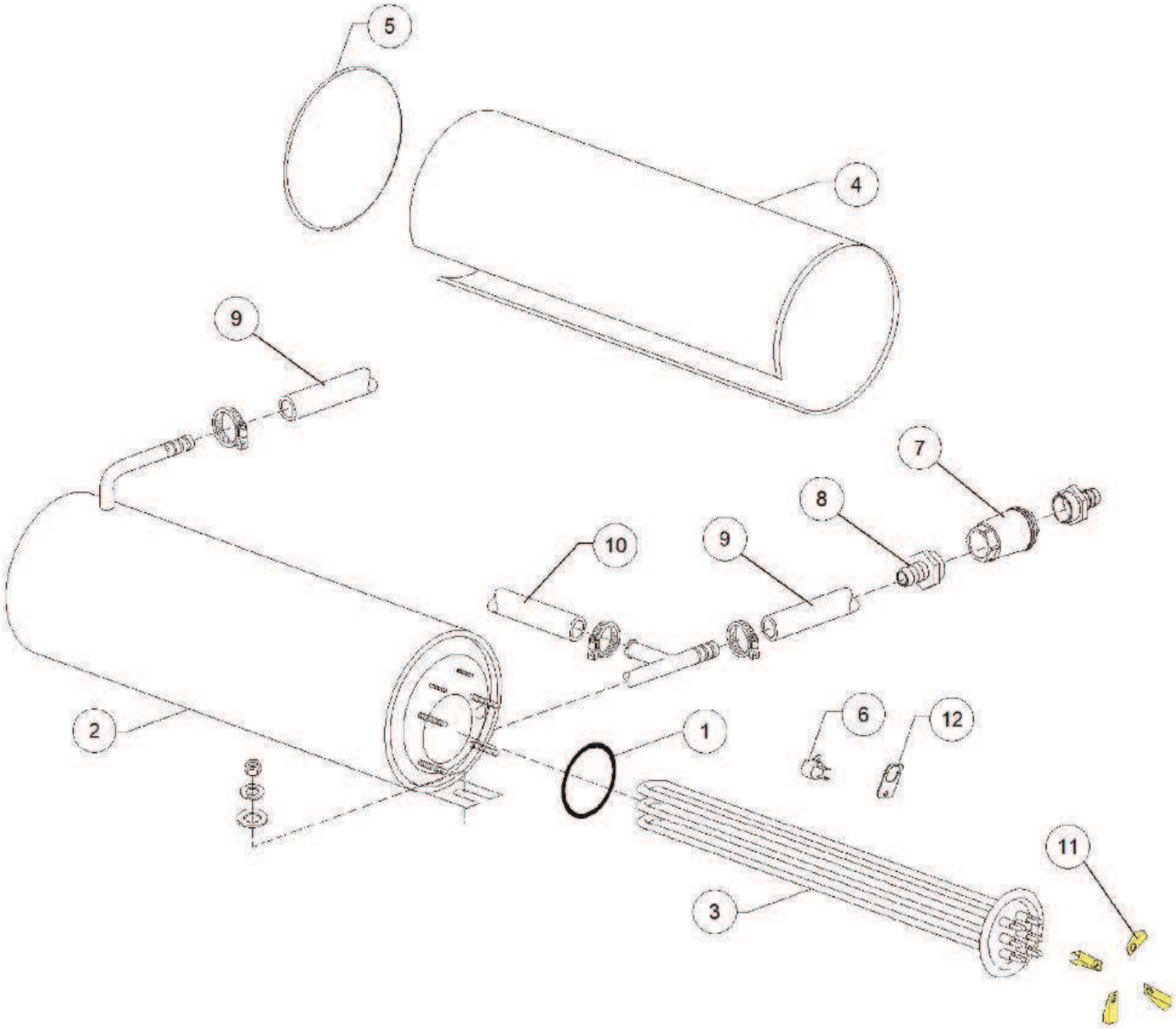

PARTS BREAKDOWN

ITEM	MODEL
49126	CD-IT-50-2

3 Ways Connection 1

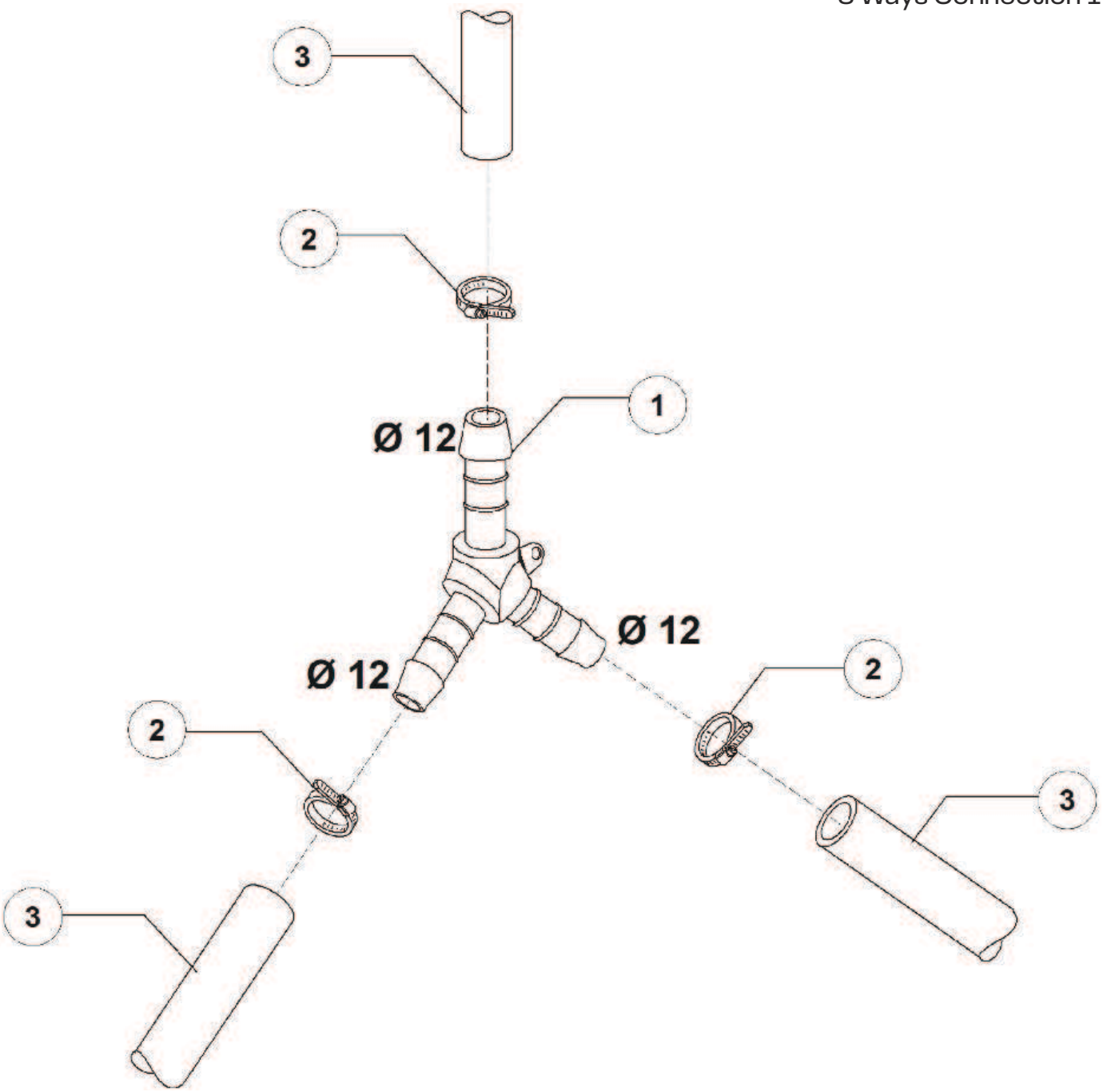

PARTS BREAKDOWN

ITEM	MODEL
49126	CD-IT-50-2

3 Ways Connection 2

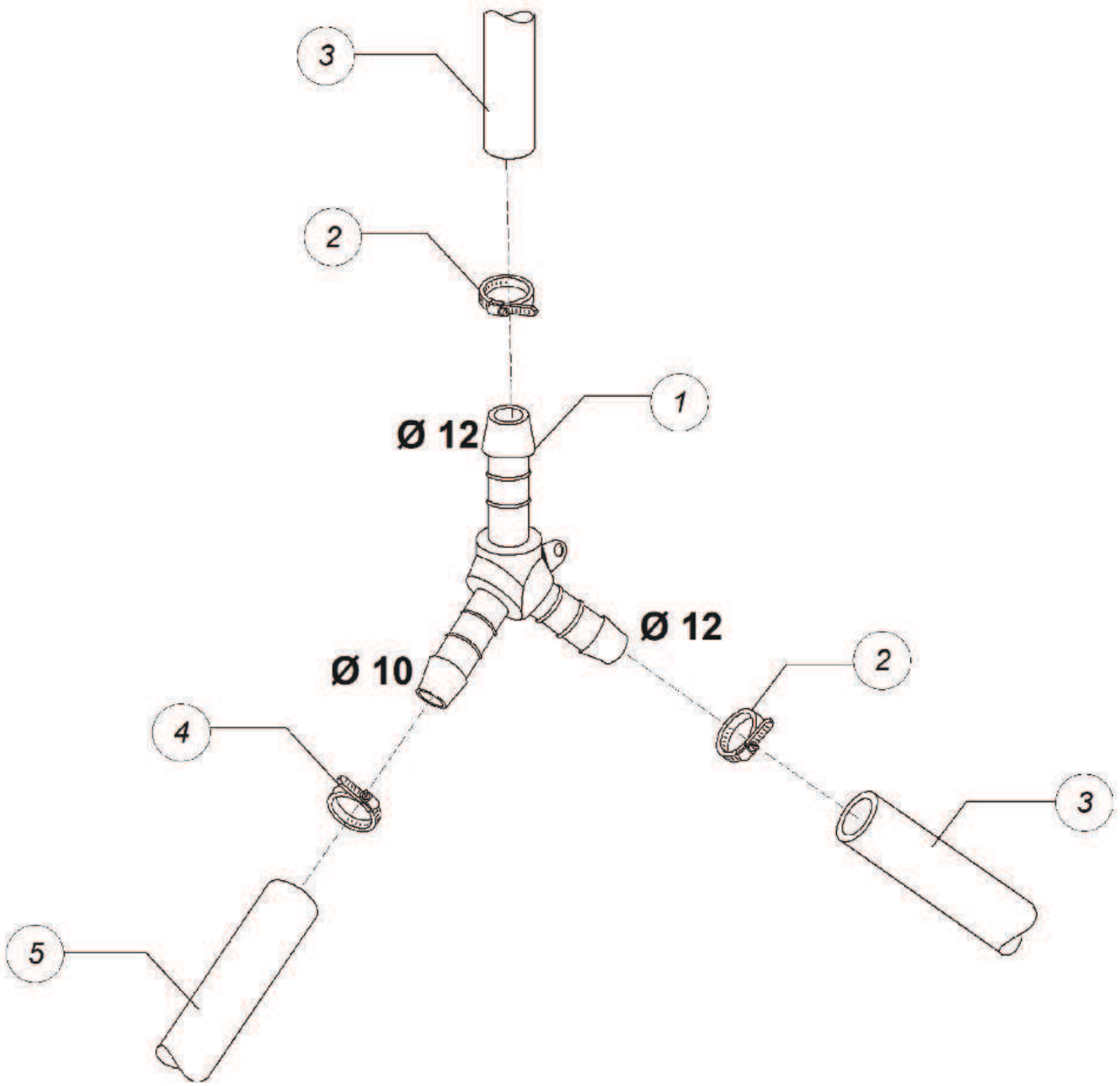

PARTS BREAKDOWN

ITEM	MODEL
49126	CD-IT-50-2

Wash Pump Group

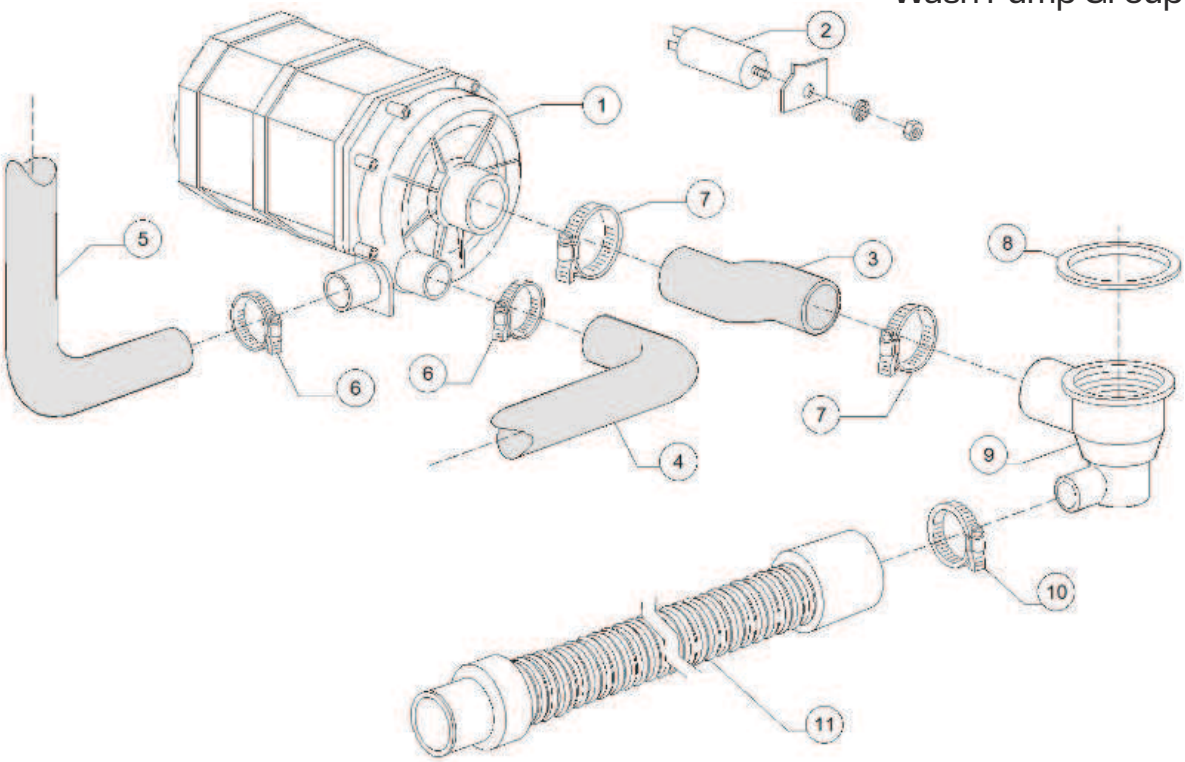

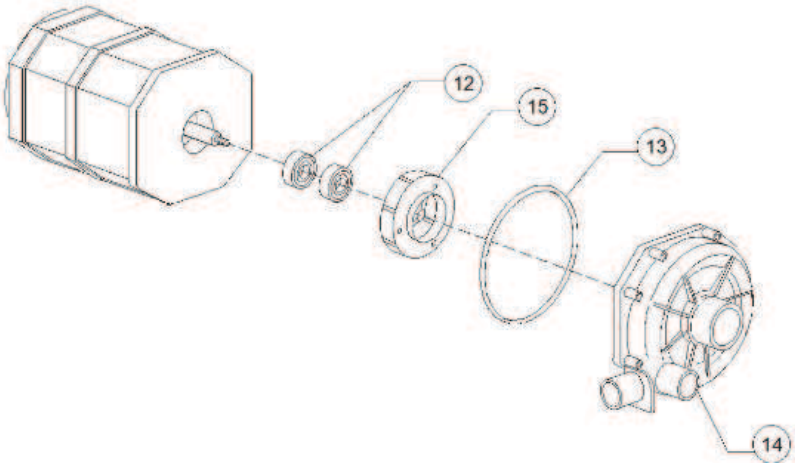

PARTS BREAKDOWN

ITEM	MODEL
49126	CD-IT-50-2

Drain Pump Group

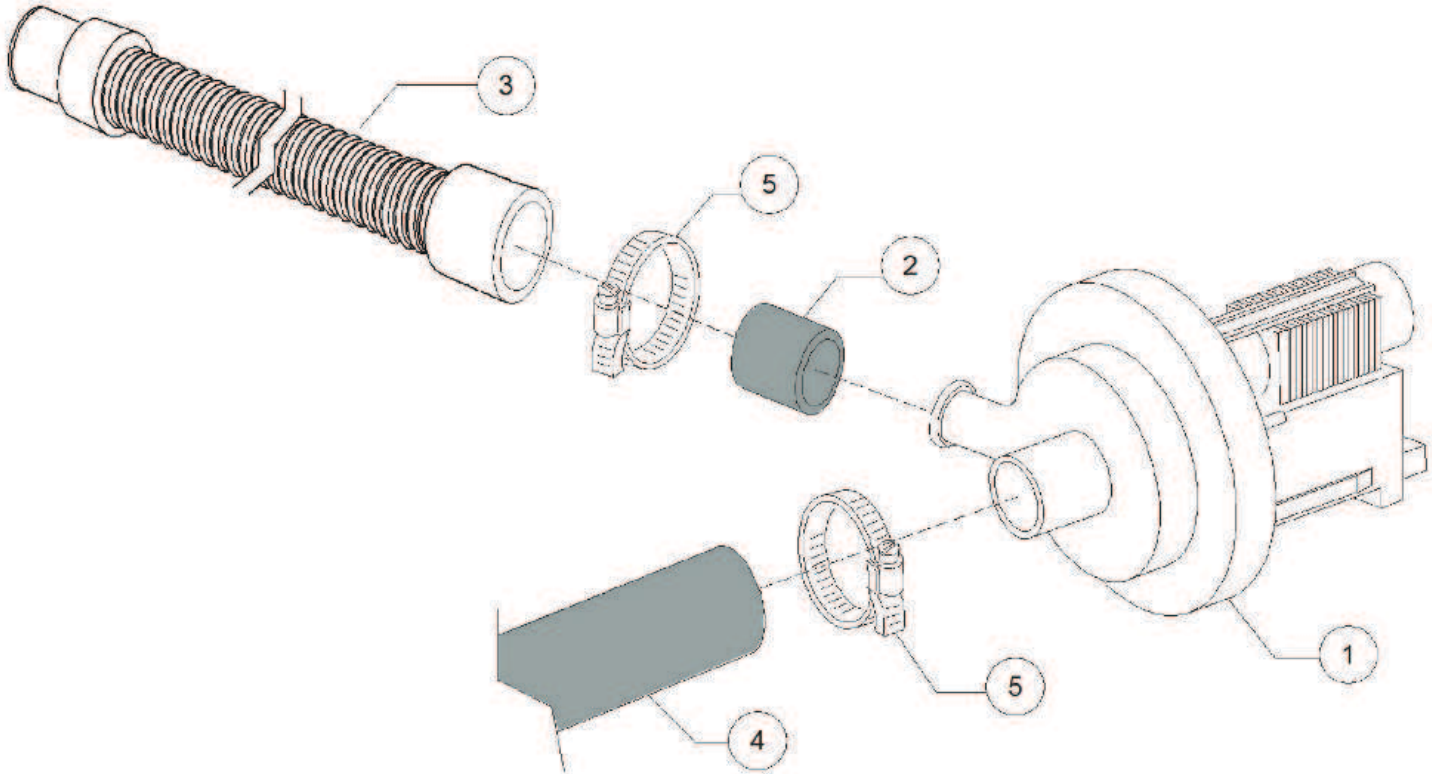

PARTS BREAKDOWN

ITEM	MODEL
49126	CD-IT-50-2

Pressure Switch Group

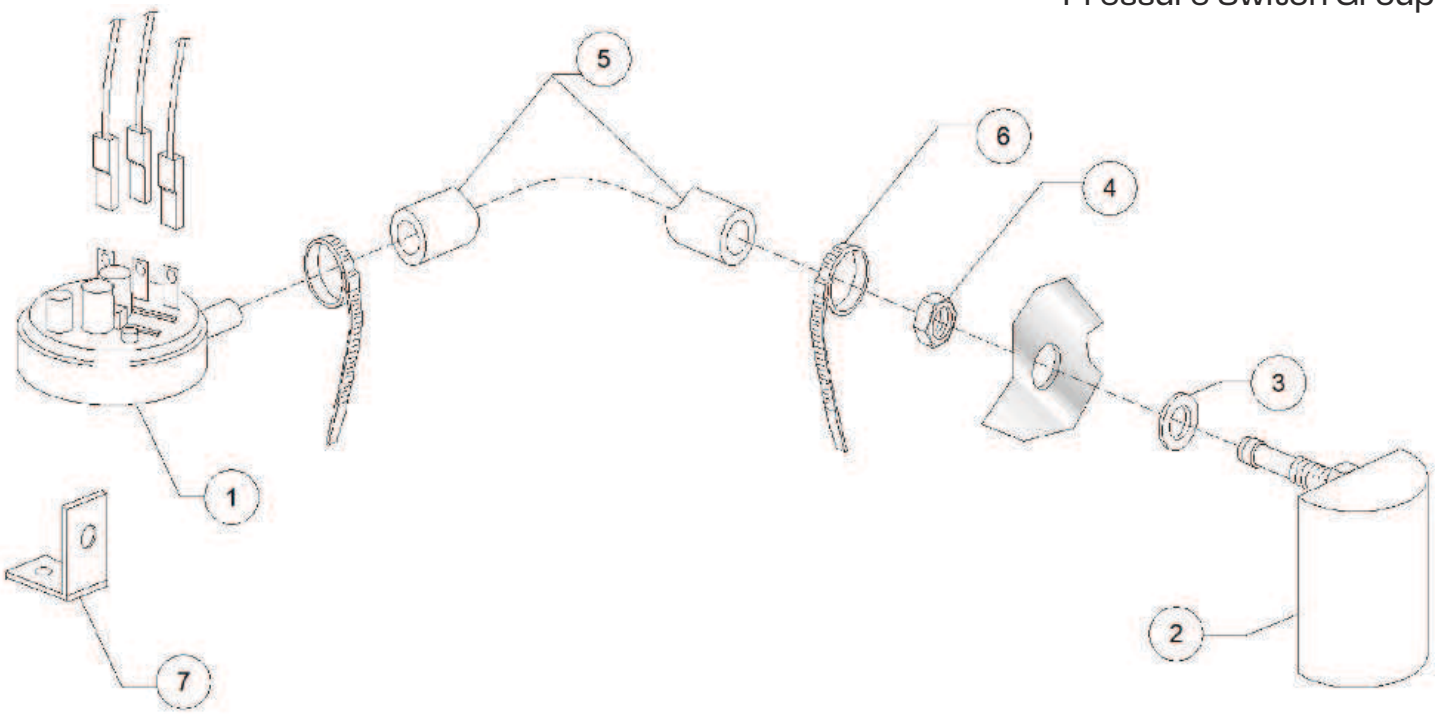

PARTS BREAKDOWN

ITEM	MODEL
49126	CD-IT-50-2

Wash Arm Group

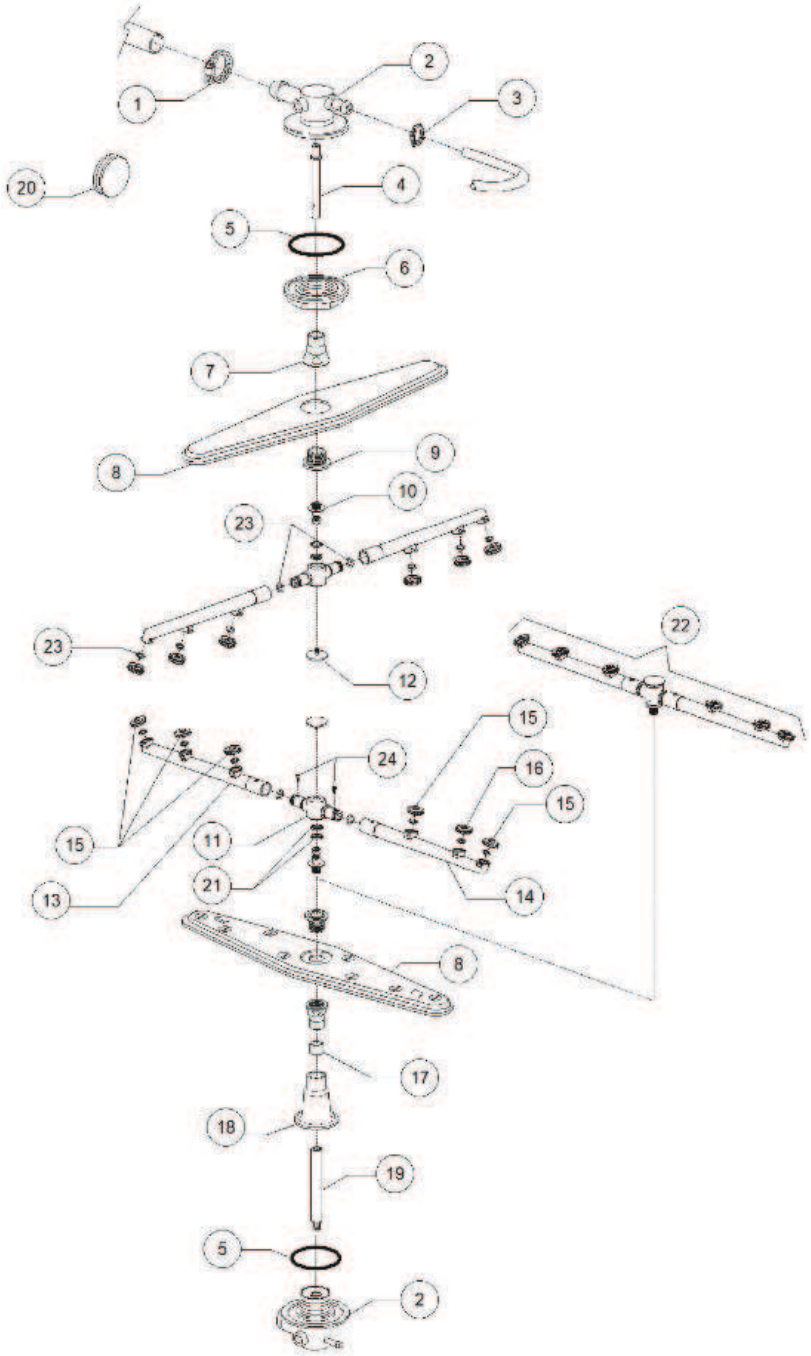

PARTS BREAKDOWN

ITEM	MODEL
49126	CD-IT-50-2

Baskets

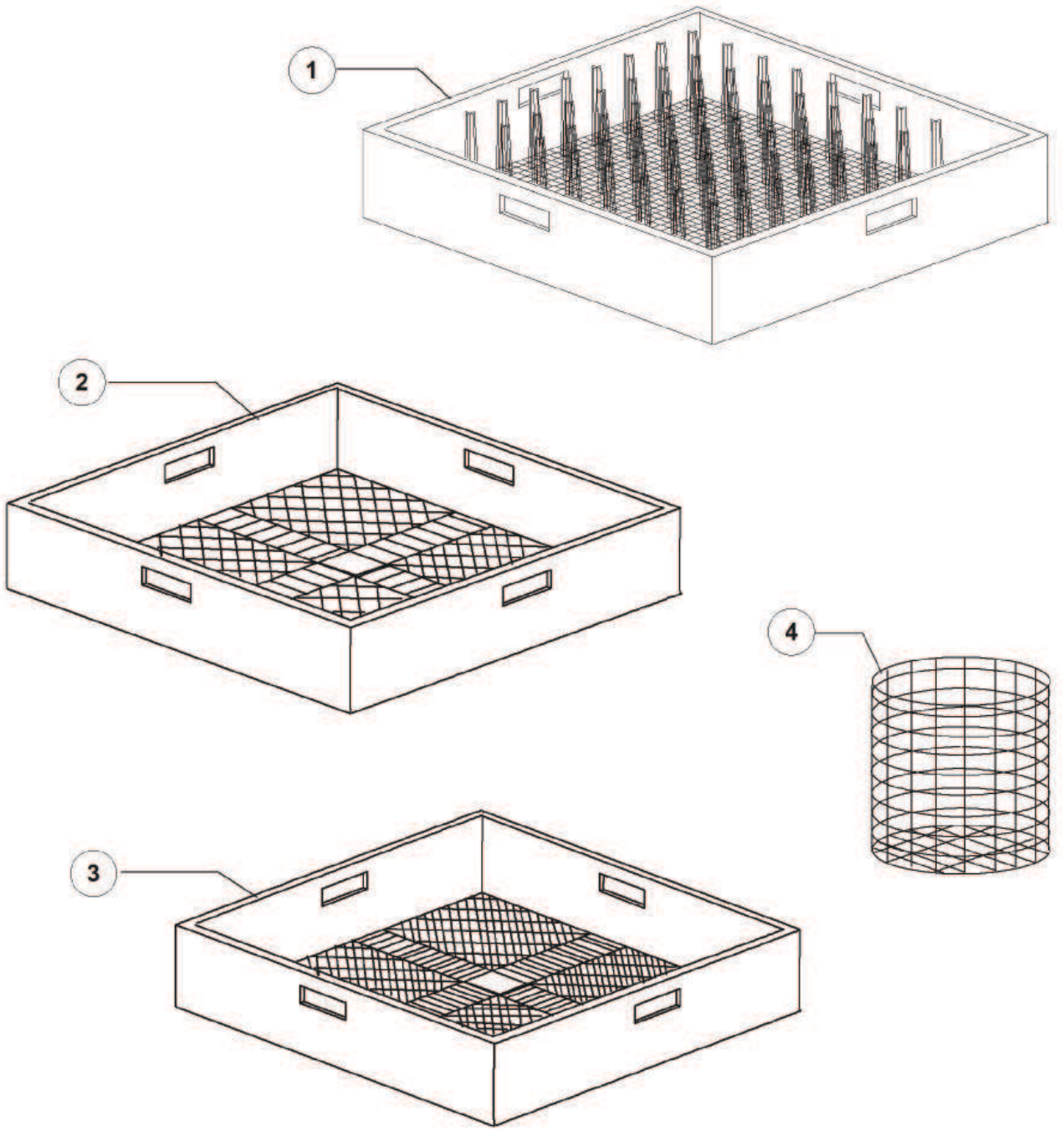

PARTS BREAKDOWN

ITEM	MODEL
49126	CD-IT-50-2

General Body

Item No.	Description	Position	Item No.	Description	Position	Item No.	Description	Position
AO604	Back Panel 501/03 for 49126	1	AO486	Overflow Pipe H187 for 49126	11	AO609	Profile for Rubber Seal 501/03 for 49126	23
AO605	Cover 501/03 for 49126	2	AO487	Door Microswitch UL for 49126	12	AO498	Rubber Fairlead D.40 RB38 for 49126	24
AO606	Bodywork 501/03 for 49126	3	AO488	2700W 230V 1 F61x26 UL Heating Elem. for 49126	13	AO499	Rubber Fairlead D.13 for 49126	25
AO480	Cable-Fastener with Screw for 49126	4	AO607	Door Jack Assembly for 49126	16	AO501	Right Side Scrap Tray for 49126	26
AO481	Ferrule for Filter Clutch for 49126	5	AO491	Door Jack Locknut for 49126	17	AO489	Door Rod Slide for 49126	27
AO502	Inner Filter for 49126	6	AO608	Moving Door Rod Spring for 49126	18	AO503	Tank Heating Element Plaque for 49126	28
AO482	Suction Filter for 49126	7	AO493	Stainless Steel Sphere D.9,52 Spring Latch 3/8 for 49126	19	AO505	Thermostat Support for 49126	29
AO483	Riser Gasket D.95x75x3 for 49126	8	AO494	Door Jack Body for 49126	20	AO506	DVGW Load Pipe for 49126	31
AO484	Overflow Pipe Gasket Dem 40 for 49126	9	AO495	Door Jack Nut for 49126	21			
AO485	High Adjustable Foot for 49126	10	AO497	Silicone Door Seal for 49126	22			

Door

Item No.	Description	Position	Item No.	Description	Position	Item No.	Description	Position
AO610	Door 501/03 for 49126	1	AO613	Stainless Steel Handle 501/03 for 49126	4	AO616	M4x12 Stainless Steel Screw BN5952 for 49126	10
AO611	Soft Door Stop Arm for 49126	2	AO614	Nut for Door Hinge 501/03 for 49126	6	AO518	Self-Stick Mousse 20x2 for 49126	11
AO612	Door Hinge Block for 49126	3	AO615	M6x12 Large TCB Stainless Steel Screw 13x3 for 49126	7	AO617	Rubber Stop for Soft Door for 49126	14

PARTS BREAKDOWN

ITEM	MODEL
49126	CD-IT-50-2

Control Panel and Switches

Item No.	Description	Position	Item No.	Description	Position	Item No.	Description	Position
AO618	Control Panel 501 DIHR 2014 for 49126	1	AO523	Int.Bip.2 Times DIHR/2014 UL for 49126	5	AO527	Gray 5-Hole Pushbutton Panel 2022 for 49126	10
AO520	Initial Uni.Clean Start DIHR/2014 UL for 49126	2	AO524	Pul.Uni. P.S. DIHR/2014 UL for 49126	6	AO528	Thermometer UL Arthermo for 49126	11
AO521	Fixed Key without Indicator DIHR/2014 for 49126	3	AO525	White Pilot Light 220V for 49126	7	AO529	Manometer UL for 49126	12
AO522	Int.Bip.On/Off DIHR/2014 UL for 49126	4	AO526	16A Switch UL for 49126	9			

Electric Control Components

Item No.	Description	Position	Item No.	Description	Position	Item No.	Description	Position
AO619	Electric Components Panel 501/03 for 49126	1	AM506	Thermostat 0-90 TR2 C1500+PVC Post.N/ALB for 49126	4	AO530	Terminal Board 6 Poles FV122 Red for 49126	7
AO532	90-120-180 Electronic Timer for 49126	2	AO531	Contactor 36A/20A 3NA 230V 50-60Hz for 49126	5	AM507	Safety Thermostat 110 1500PVC for 49126	8
AO620	Relay 230V 50/60Hz Din Rail for 49126	3	AO621	Relay 230V 50/60Hz Din Rail 3P for 49126	6			

Solenoid Valve Group

Item No.	Description	Position	Item No.	Description	Position	Item No.	Description	Position
AO533	Single Solenoid Valve H20 230V for 49126	1	AO535	Gasket 3/4 Load H20 Dis.LS061 for 49126	4	AO537	11,5x19 EPDM Rubber Hose for 49126	5
AO534	Clamp 12/22 AISI 430 for 49126	3	AO536	9,5x16 EPDM Rubber Hose for 49126	5			

PARTS BREAKDOWN

ITEM	MODEL
49126	CD-IT-50-2

DVGW Valve

Item No.	Description	Position	Item No.	Description	Position	Item No.	Description	Position
AO534	Clamp 12/22 AISI 430 for 49126	1	AO540	Valve Nut Cover for 49126	4	AO543	O-Ring 115 KTW for 49126	7
AO538	Drain Valve Center Body for 49126	2	AO541	Valve Gasket for 49126	5	AO536	9,5x16 EPDM Rubber Hose for 49126	8, 9
AO539	Valve Nut for 49126	3	AO542	"5/8" Ball for DVGW Valve 07 for 49126	6	AO537	11,5x19 EPDM Rubber Hose for 49126	8, 9

Rinse Aid Dispenser Group

Item No.	Description	Position	Item No.	Description	Position	Item No.	Description	Position
AO544	Rinse Aid Dosing Pump for 49126	1	AO547	Membrane for Dosing Pump for 49126	4	AO536	9,5x16 EPDM Rubber Hose for 49126	7
AO545	Tecnopro Non Return Valve for 49126	2	AO548	Small Filter for 49126	5	AO550	Y-Piece D.10-12-12 for 49126	8
AO546	Gasket D.22 for 49126	3	AO549	8x15 EPDM Pipe for 49126	6			

Boiler Group

Item No.	Description	Position	Item No.	Description	Position	Item No.	Description	Position
AO551	O-Ring 151 NBR for 49126	1	AO555	Insulating Disk D.138 for 49126	5	AO557	Heating Element Mounting Bracket D.6,3 for 49126	11
AO552	Boiler 50 (AISI 304) for 49126	2	AO556	Klixon Safety Thermostat for 49126	6	AO505	Thermostat Support for 49126	12
AO553	6000/6530W 230/240V 3 UL Heating Elem. for 49126	3	AO537	11,5x19 EPDM Rubber Hose for 49126	9			
AO554	Boiler Insulating G500 for 49126	4	AO549	8x15 EPDM Pipe for 49126	10			

3 Ways Connection 1

Item No.	Description	Position	Item No.	Description	Position	Item No.	Description	Position
AO558	Plastic Y-Piece D.12 for 49126	1	AO534	Clamp 12/22 AISI 430 for 49126	2	AO537	11,5x19 EPDM Rubber Hose for 49126	3

PARTS BREAKDOWN

ITEM	MODEL
49126	CD-IT-50-2

3 Ways Connection 2

Item No.	Description	Position	Item No.	Description	Position	Item No.	Description	Position
AO550	Y-Piece D.10-12-12 for 49126	1	AO537	11,5x19 EPDM Rubber Hose for 49126	3	AO536	9,5x16 EPDM Rubber Hose for 49126	5
AO534	Clamp 12/22 AISI 430 for 49126	2	AO559	Clamp 8/16 AISI 430 for 49126	4			

Wash Pump Group

Item No.	Description	Position	Item No.	Description	Position	Item No.	Description	Position
AO560	Pump-UL HP0.7 230V/60Hz for 49126	1	AO565	Clamp 25/40 AISI 430 for 49126	6	AO567	Drain Hose 1,5MT D.24 for 49126	11
AO561	12,5 UF Condenser for 49126	2	AO566	Clamp 50/70 AISI 430 for 49126	7	AO568	Rotating Seals for 49126	12
AO562	Suction Pipe Coupling for 49126	3	AO483	Riser Gasket D.95x75x3 for 49126	8	AO569	OR Pump O-Ring for 49126	13
AO563	Lower Wash Pipe Coupling for 49126	4	AO501	Right Side Scrap Tray for 49126	9	AO570	Scroll for 49126	14
AO564	Top Delivery Pipe GS50 for 49126	5	AO534	Clamp 12/22 AISI 430 for 49126	10	AO571	Pump Rotor 0,75HP D.77 (DW150933) for 49126	15

Drain Pump Group

Item No.	Description	Position	Item No.	Description	Position	Item No.	Description	Position
AO572	Drain Pump-UL 230V/60Hz for 49126	1	AO567	Drain Hose 1,5MT D.24 for 49126	3	AO565	Clamp 25/40 AISI 430 for 49126	5
AO573	Pipe Coupling 28x22 L21 for 49126	2	AO574	D.28 EPDM Pipe for 49126	4			

Pressure Switch Group

Item No.	Description	Position	Item No.	Description	Position	Item No.	Description	Position
AO575	Pressure Switch 47-28 UL for 49126	1	AO578	Stainless Steel Nut M8 DIN934 for 49126	4	AO581	Pressure Switch Support for 49126	7
AO576	Grey Air Trap Assembly L75 for 49126	2	AO579	EPDM Hose 4.5x9 for Pressure Switch for 49126	5			
AO577	O-Ring Rolmart D14x8x1,5 for 49126	3	AO580	Plastic Clamp 98x2,5 for 49126	6			

PARTS BREAKDOWN

ITEM	MODEL
49126	CD-IT-50-2

Wash Arm Group

Item No.	Description	Position	Item No.	Description	Position	Item No.	Description	Position
AO565	Clamp 25/40 AISI 430 for 49126	1	AO588	Plastic Ring Nut for Stainless Steel Rotor for 49126	9	AO596	Rotor Hub/Pipe Coupling Spacer for 49126	17
AO582	Wash Arms Lower / Upper Support GS for 49126	2	AO589	Rinse Axle 03 for 49126	10	AO597	Lower Pipe Coupling L122 for 49126	18
AO534	Clamp 12/22 AISI 430 for 49126	3	AO622	Hub for Rinse Rotor 2009 for 49126	11	AO598	Lower Rinse Axle D.16x136 Stainless Steel Rotor 05 for 49126	19
AO583	Rinse Upper Axe D.16x40 Stainless Steel Rotor 05 for 49126	4	AO591	Rinse Arm Screw for 49126	12	AO627	Bague of Espacement for 49126	21
AO584	6225 O-Ring 160 NBR for 49126	5	AO623	Grey Right Rinse Arm 2009 for 49126	13	AO628	Upper/Lower Rinse Assembly 2009 for 49126	22
AO585	Fastening Ring Nut for Turret for 49126	6	AO624	Grey Left Rinse Arm 2009 for 49126	14	AO629	O-Ring R6 NBR for 49126	23
AO586	Hub for Plastic Rotor 05 for 49126	7	AO625	Opened Rinse Nozzle for 49126	15	AO630	4x10 TCB D.8 SPAX Toothed Screw for 49126	24
AO587	Stainless Steel Wash Rotor for 49126	8	AO626	Closed Rinse Nozzle for 49126	16			

Baskets

Item No.	Description	Position	Item No.	Description	Position
AO600	Plastic Plates Basket 500x500 for 49126	1	AO602	Cutlery Basket - Tight Mesh (Plastic) for 49126	3
AO601	500x500 Large Mesh Glass Basket for 49126	2	AO603	Cutlery Basket for 49126	4

PARTS BREAKDOWN

ITEM	MODEL
49127	CD-IT-110

General Body

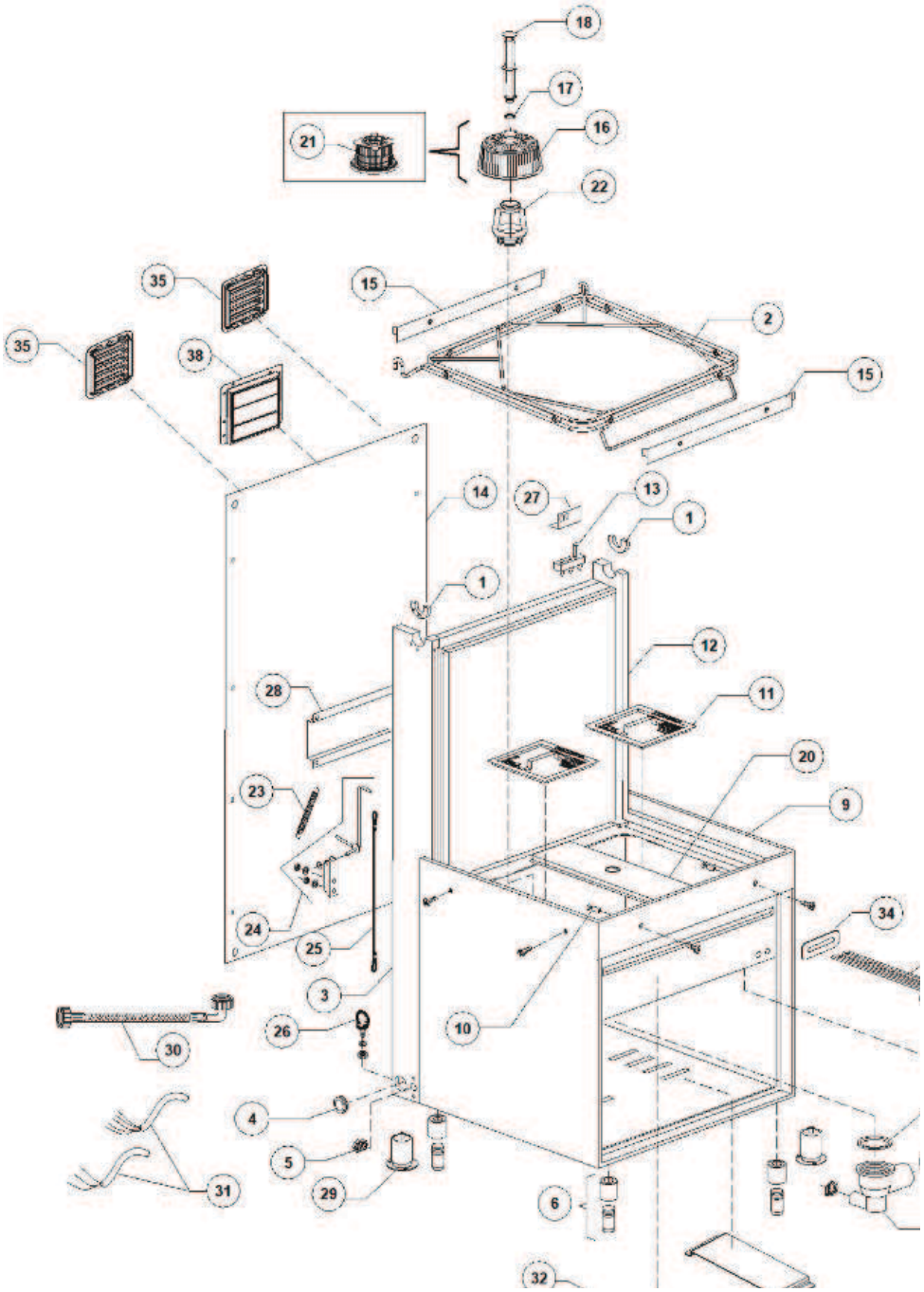

PARTS BREAKDOWN

ITEM	MODEL
49127	CD-IT-110

Hood

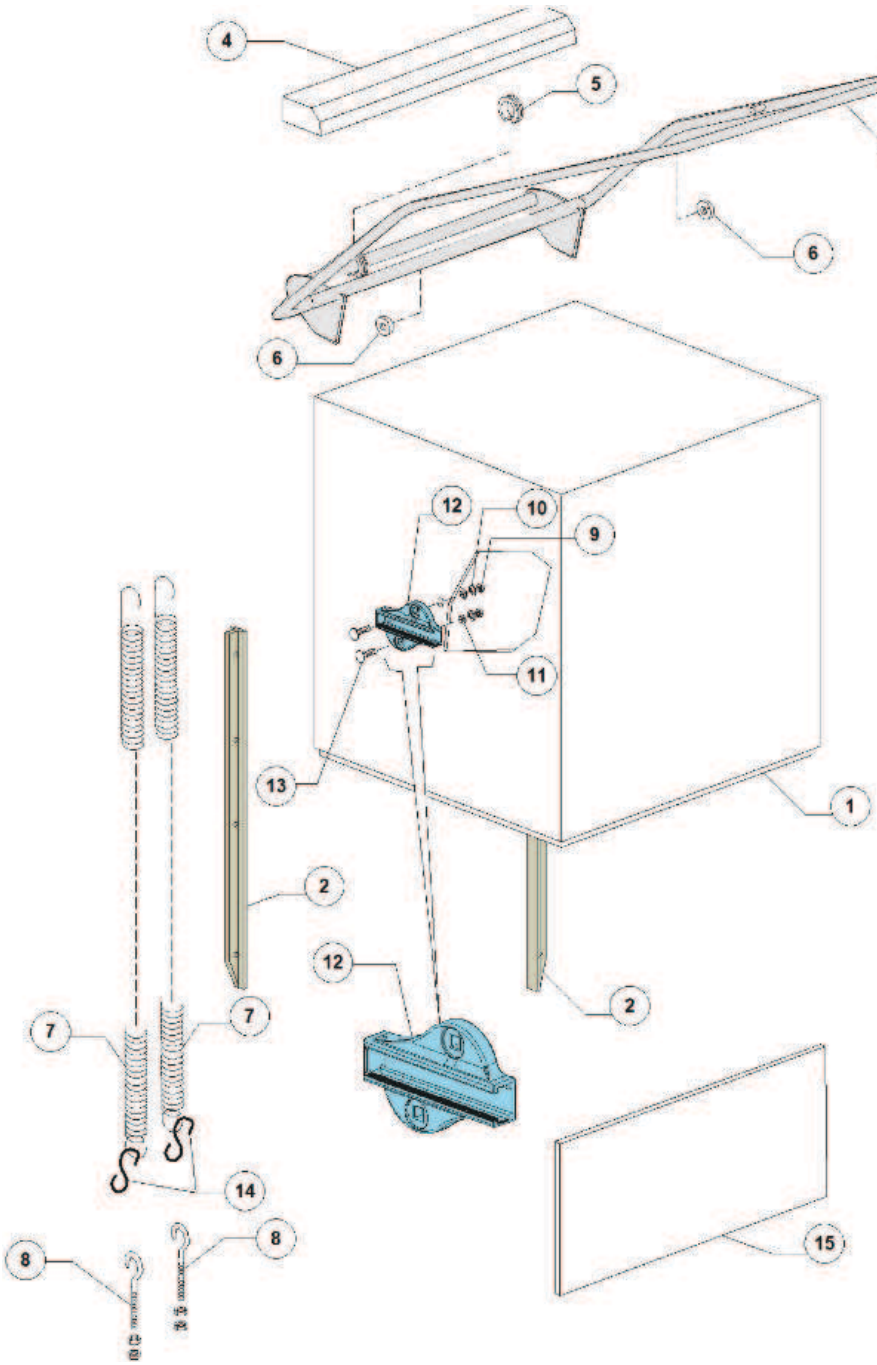

PARTS BREAKDOWN

ITEM	MODEL
49127	CD-IT-110

Electric Control Components

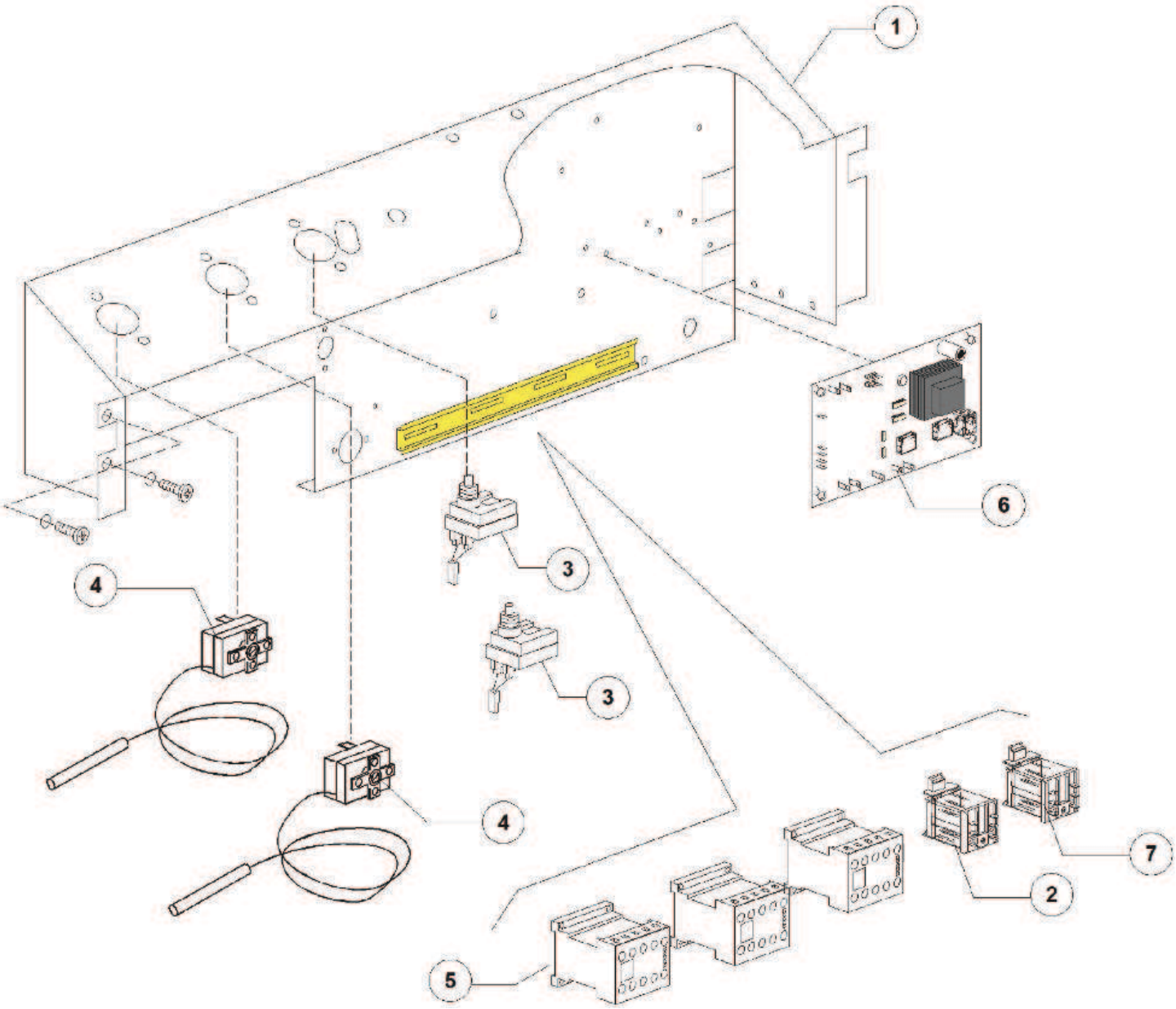

PARTS BREAKDOWN

ITEM	MODEL
49127	CD-IT-110

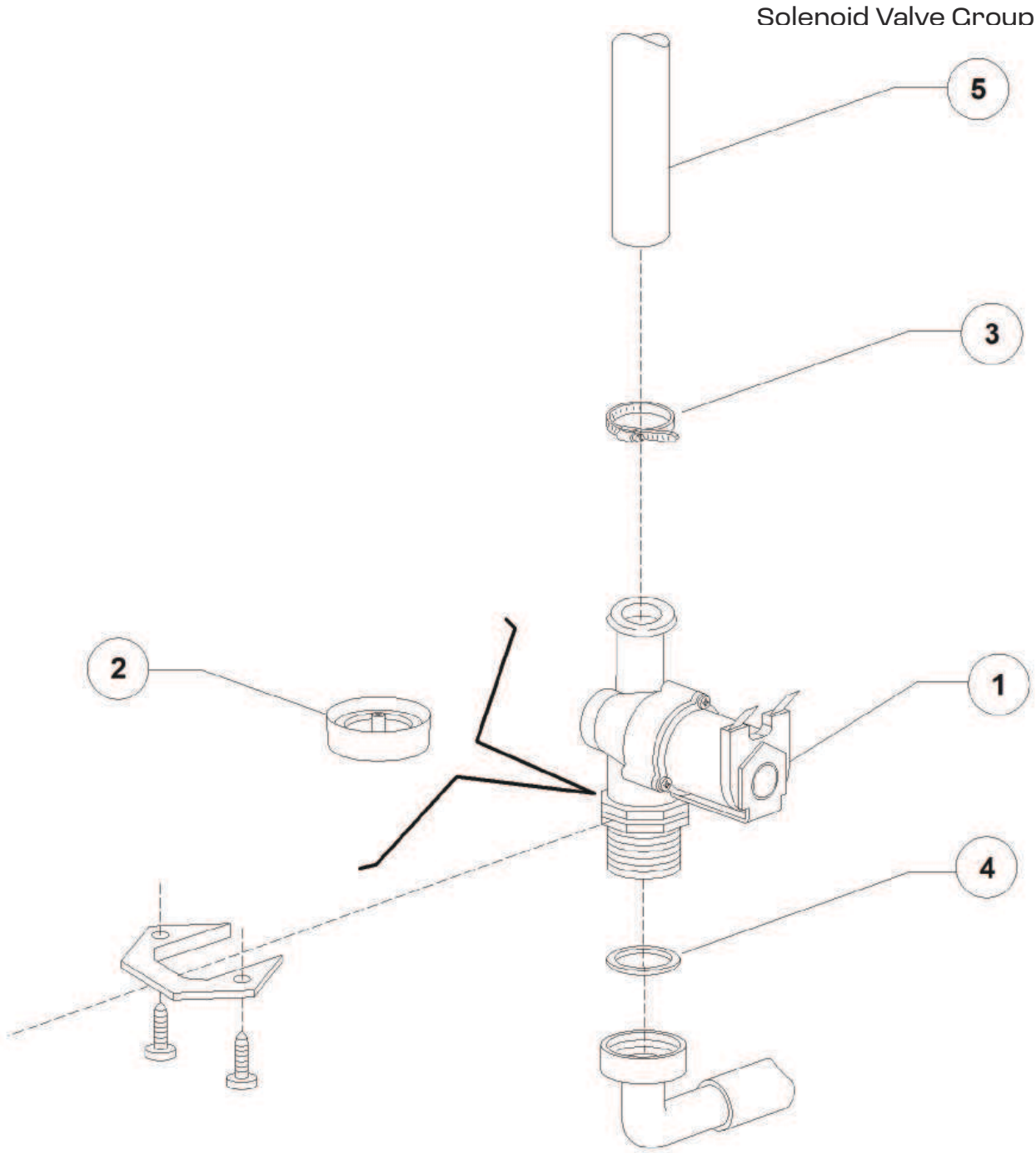

PARTS BREAKDOWN

ITEM	MODEL
49127	CD-IT-110

DVGW Valve

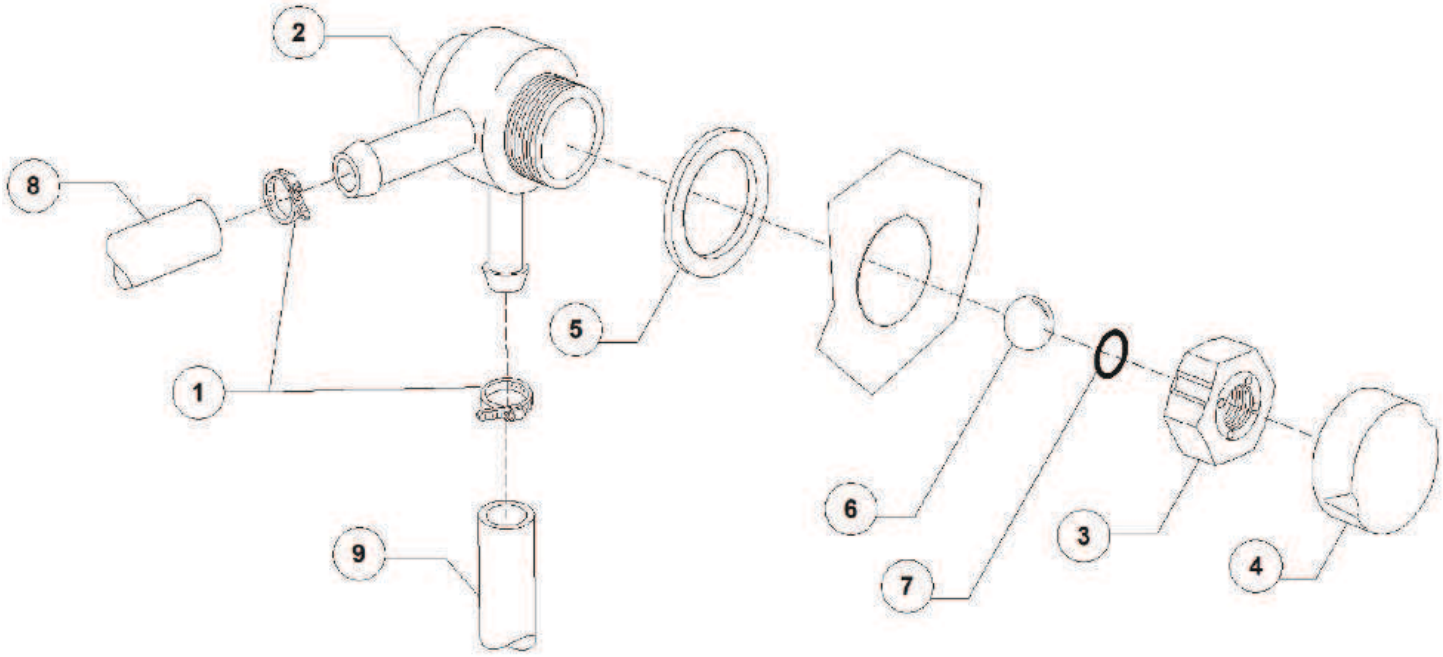

PARTS BREAKDOWN

ITEM	MODEL
49127	CD-IT-110

Rinse Aid Dispenser Group

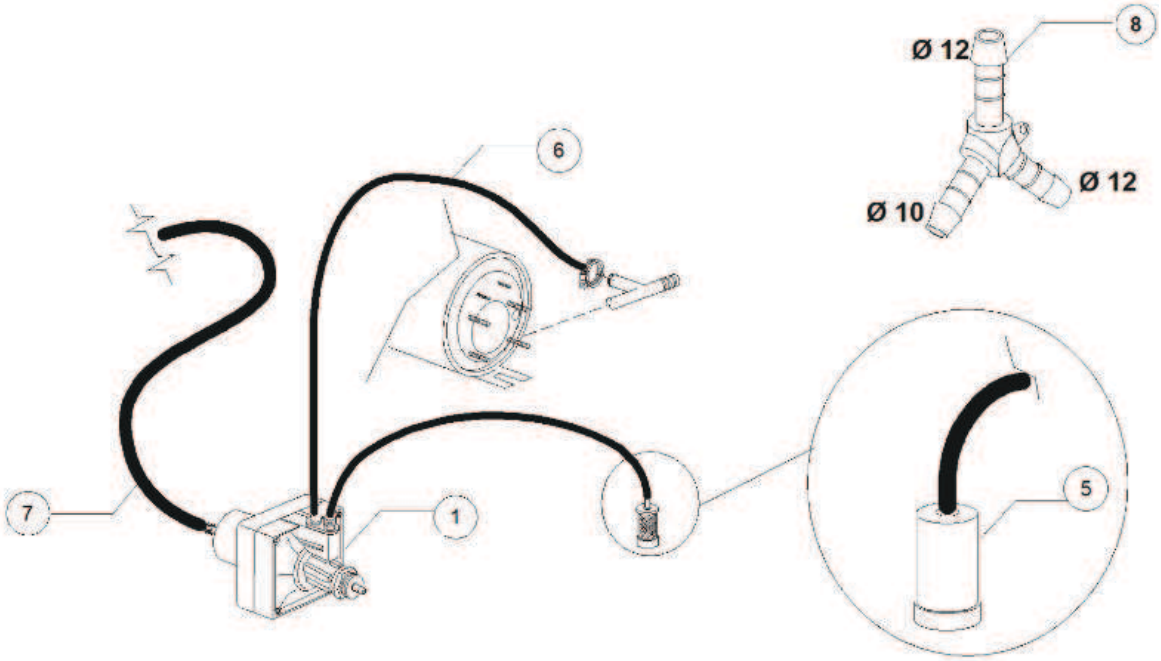

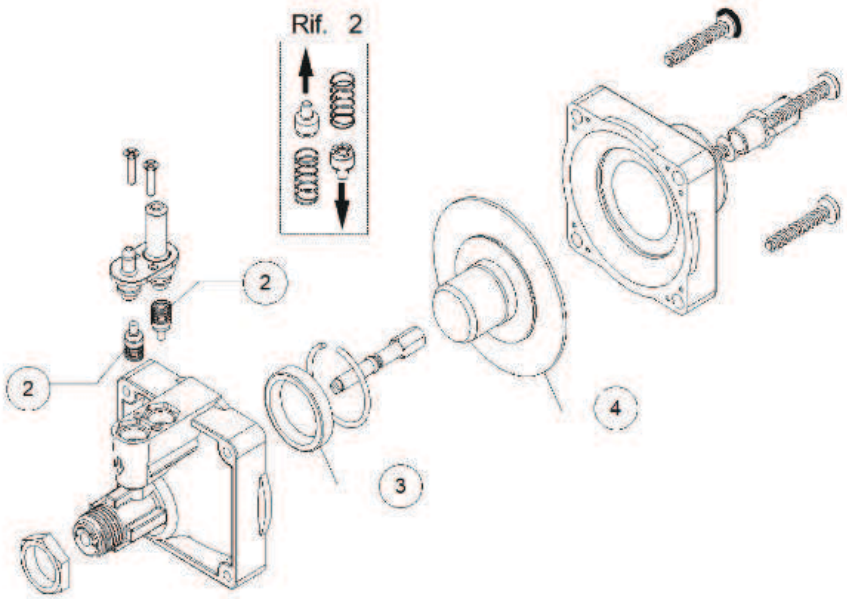

PARTS BREAKDOWN

ITEM	MODEL
49127	CD-IT-110

Boiler Group

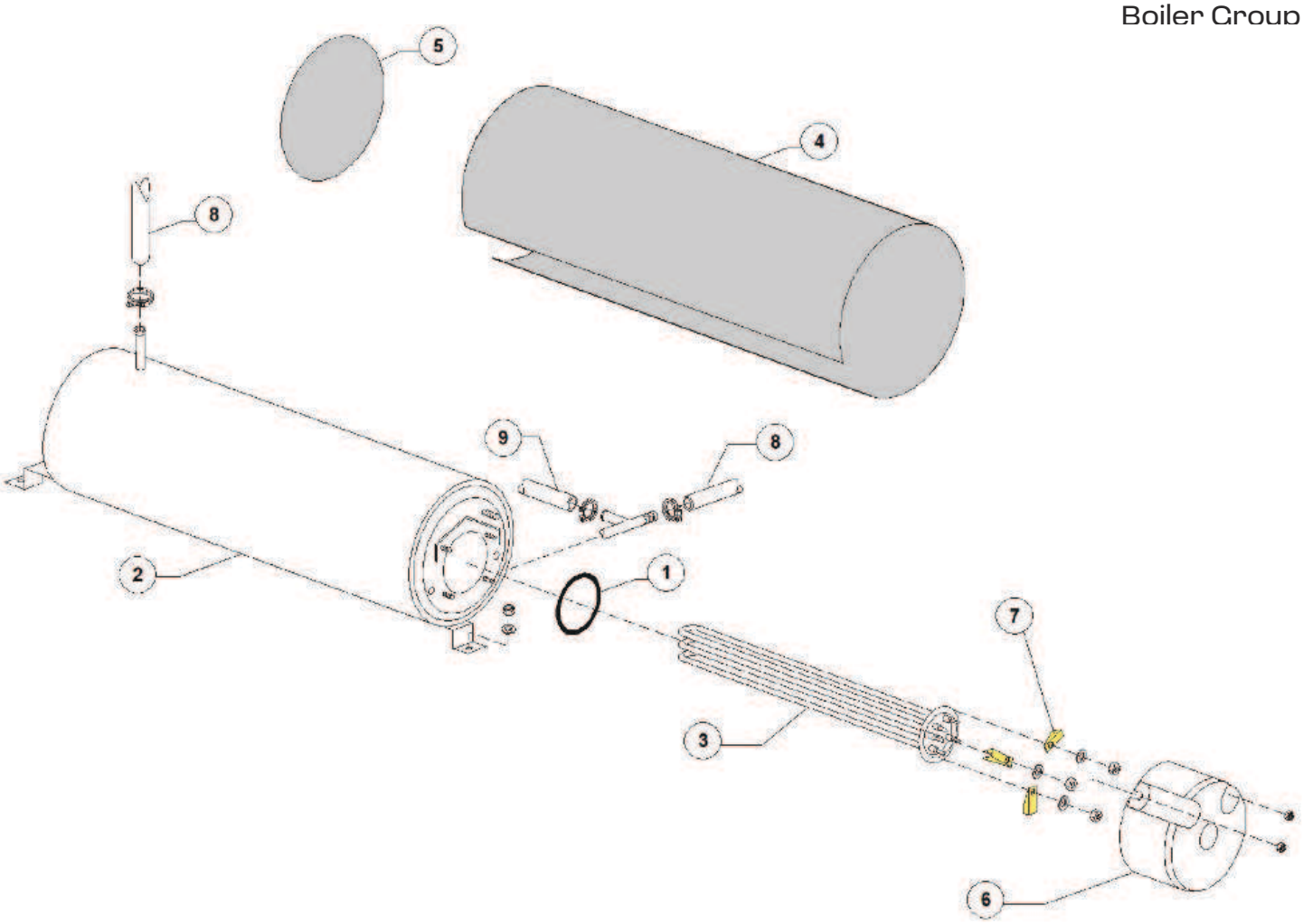

PARTS BREAKDOWN

ITEM	MODEL
49127	CD-IT-110

3 Ways Connection

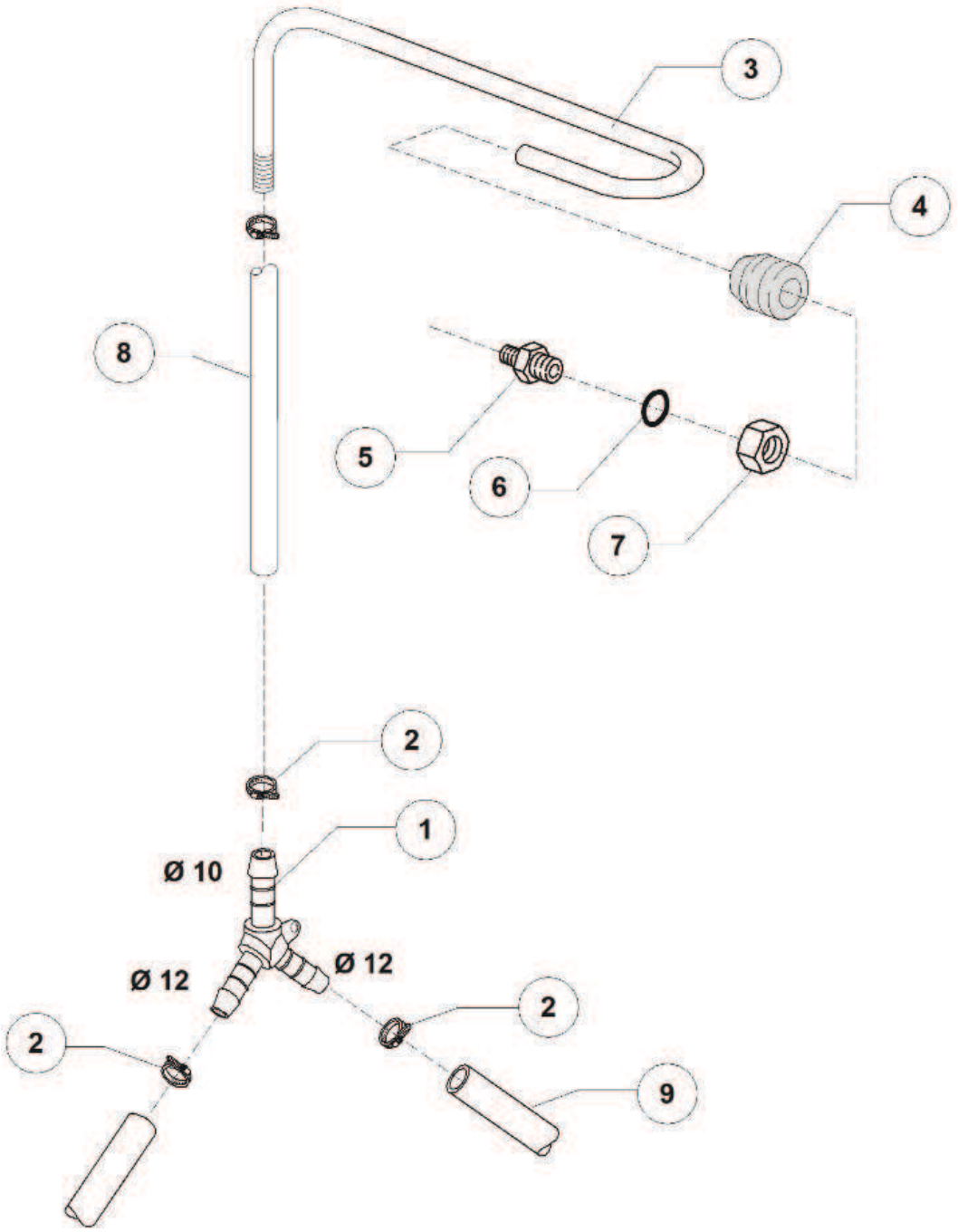

PARTS BREAKDOWN

ITEM	MODEL
49127	CD-IT-110

Wash Pump Group

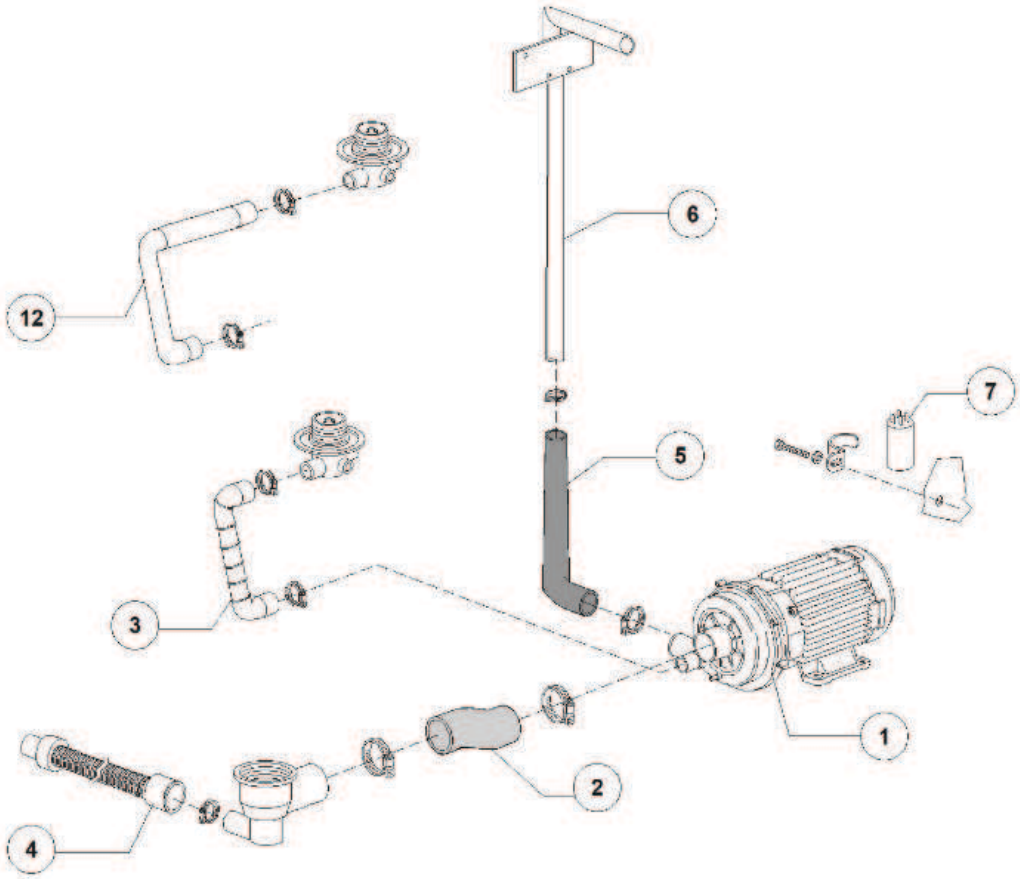

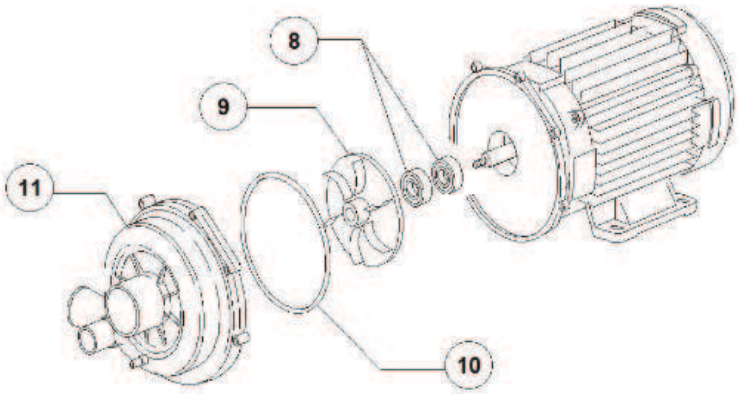

PARTS BREAKDOWN

ITEM	MODEL
49127	CD-IT-110

Drain Pump Group

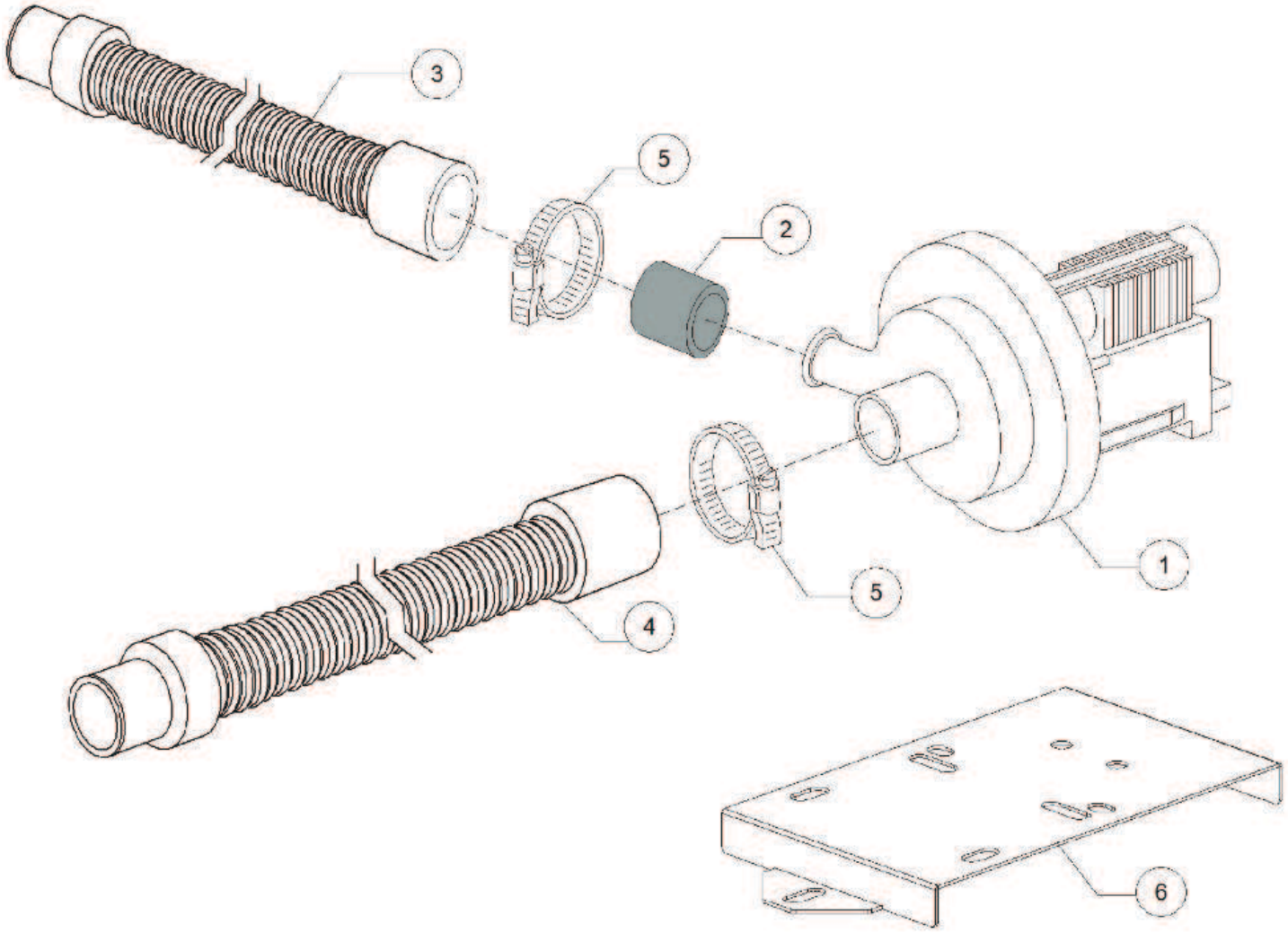

PARTS BREAKDOWN

ITEM	MODEL
49127	CD-IT-110

Pressure Switch Group

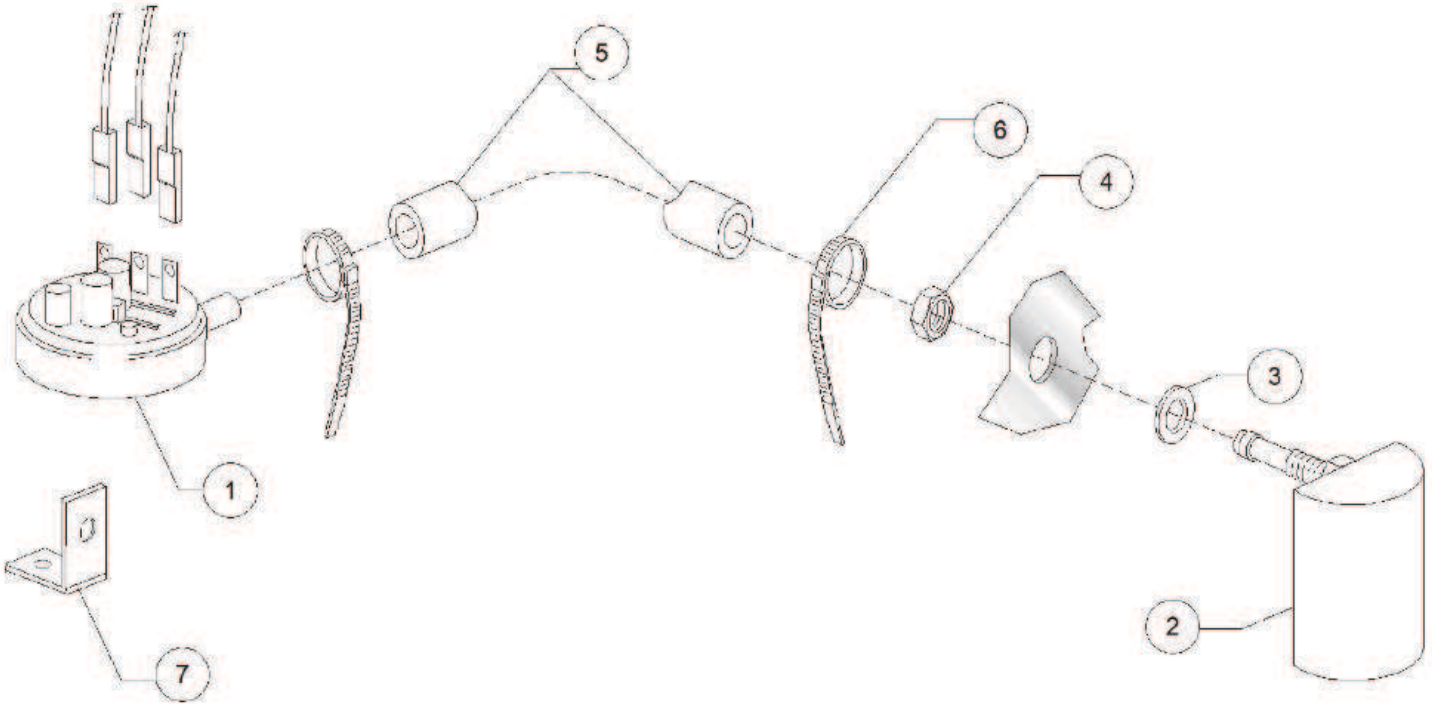

PARTS BREAKDOWN

ITEM	MODEL
49127	CD-IT-110

Wash Arm Group

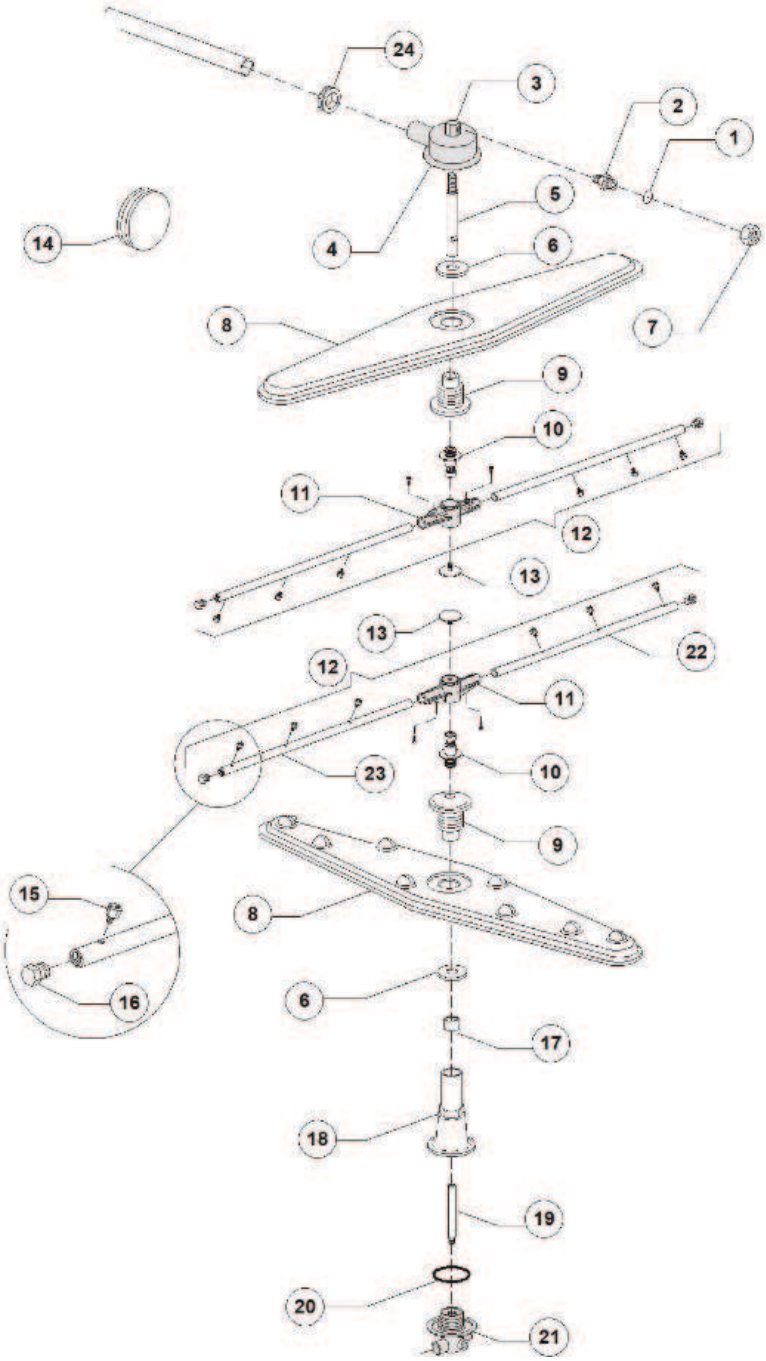

PARTS BREAKDOWN

ITEM	MODEL
49127	CD-IT-110

Baskets

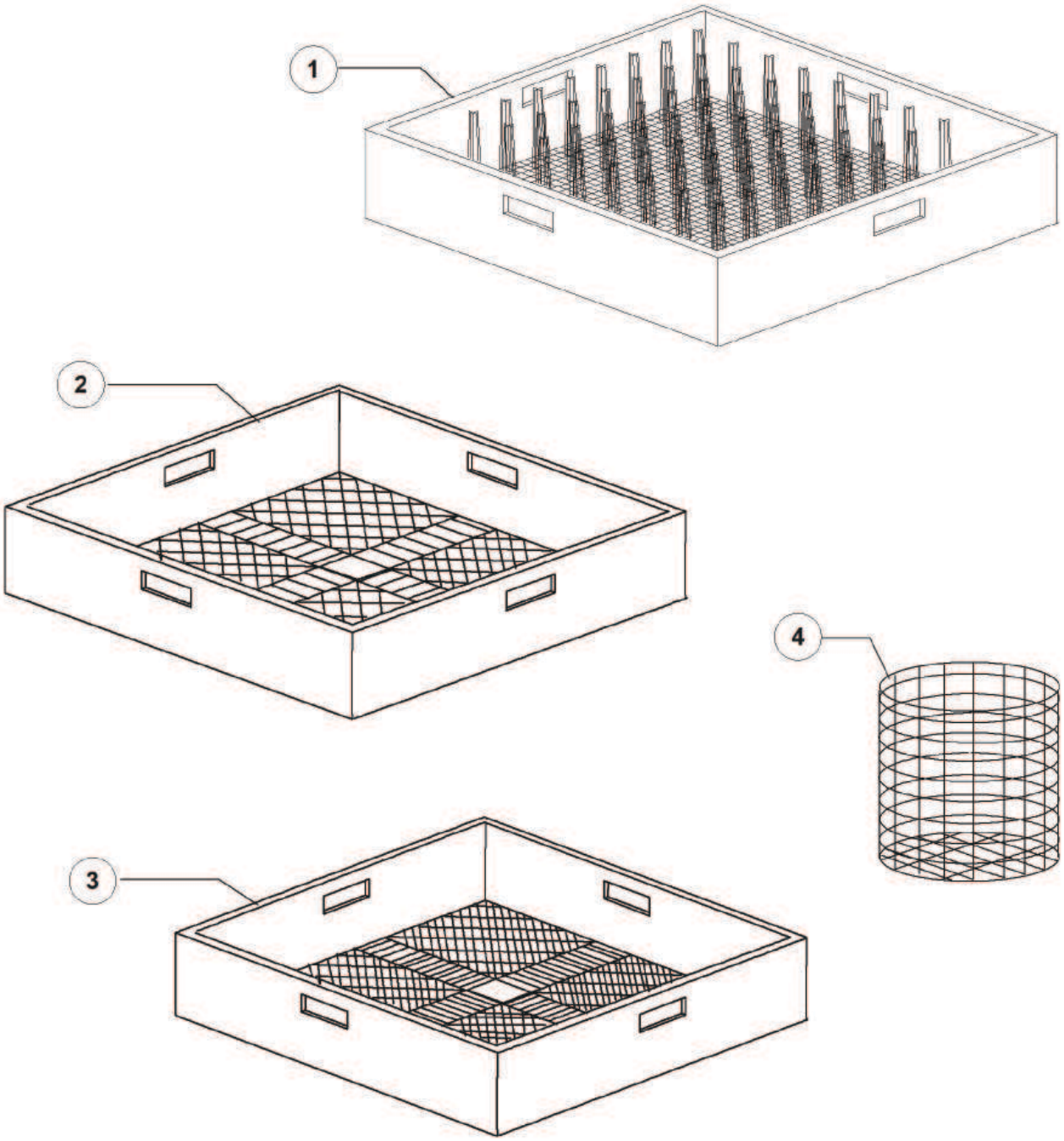

PARTS BREAKDOWN

ITEM	MODEL
49127	CD-IT-110

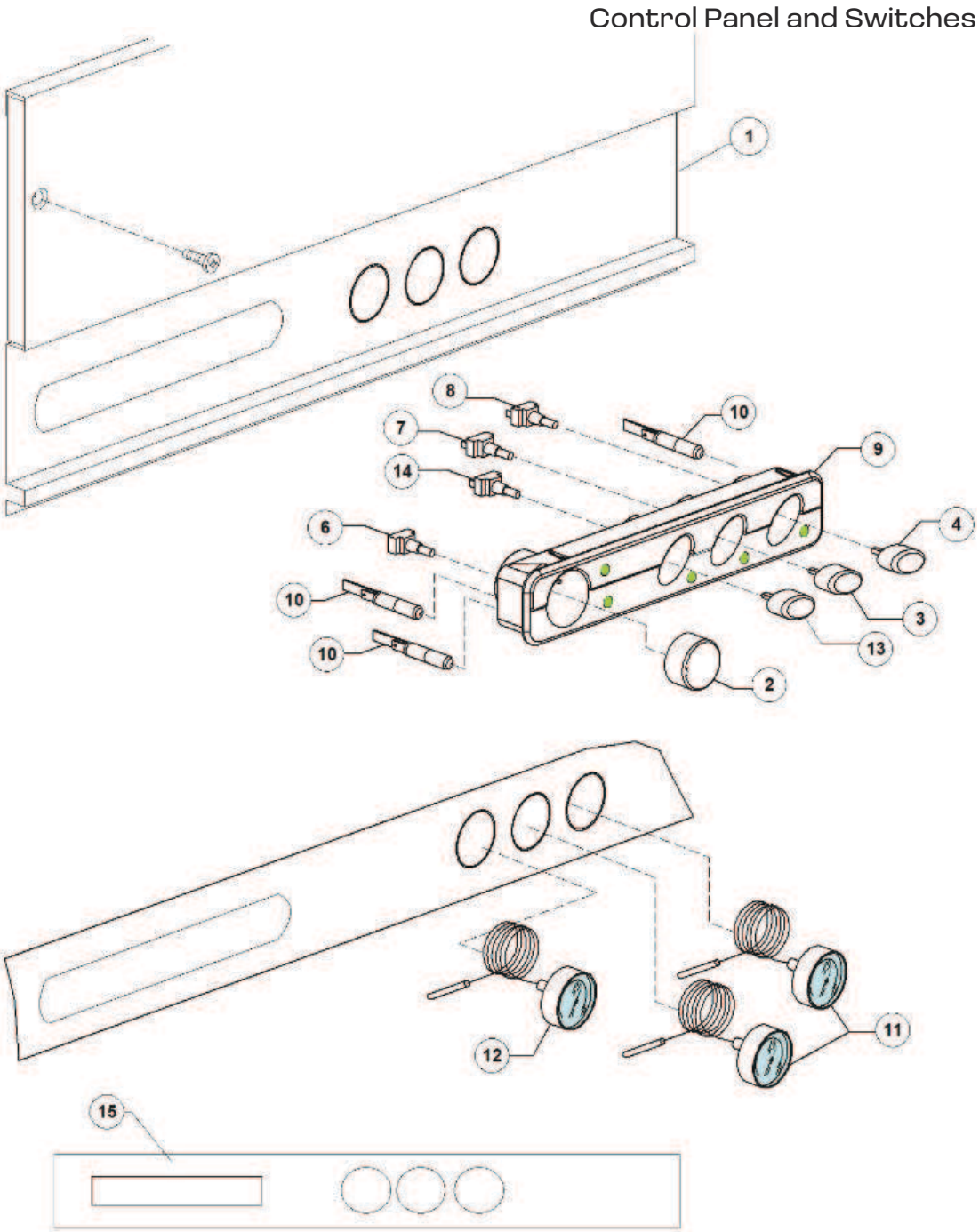

PARTS BREAKDOWN

ITEM	MODEL
49127	CD-IT-110

General Body

Item No.	Description	Position	Item No.	Description	Position	Item No.	Description	Position
AO694	Right/Left Handle Pilot Bush for 49127	1	AO702	Right Standard for 49127	12	AO707	Door Spring for 49127	23
AO695	Stainless Steel Basket Support 12S for 49127	2	AO703	Limit Stop Push Button for 49127	13	AO708	Safety System Assembly Support for 49127	24
AO696	Left Standard for 49127	3	AO704	Basket Board for 49127	15	AO709	Safety System Rope 11/04 for 49127	25
AO697	Rubber Fairlead D.46x50 for 49127	4	AO482	Suction Filter for 49127	16	AO710	M8 Zinc Plated Male Hook for 49127	26
AO698	Adjustable Foot M10 132-210 2" for 49127	6	AO484	Overflow Pipe Gasket Dem 40 for 49127	17	AO711	Microswitch Support for 49127	27
AO501	Right Side Scrap Tray for 49127	7	AO705	Overflow Pipe H208 for 49127	18	AO712	Tie Rod Spring Support for 49127	28
AO488	2700W 230V 1 F61x26 UL Heating Elem. for 49127	8	AO483	Riser Gasket D.95x75x3 for 49127	19	AO506	DVGW Load Pipe for 49127	30
AO699	Base+Tank+Back Assembly for 49127	9	AO706	Central Transvers.Supp.for Filter 11/04 for 49127	20	AO503	Tank Heating Element Plaque for 49127	34
AO700	Basket Holder Pin Support for 49127	10	AO502	Inner Filter for 49127	21	AO713	External Protection IPX4/IPX5 for 49127	38
AO701	Tank Back Filter for 49127	11	AO481	Ferrule for Filter Clutch for 49127	22			

Hood

Item No.	Description	Position	Item No.	Description	Position	Item No.	Description	Position
AO714	Complete Hood 11/04 for 49127	1	AO719	Wheel for Basket P3S/P4S8 for 49127	6	AO724	Cam Seal Washer D.16 for 49127	11
AO715	Hood Sliding Guide 11/04 for 49127	2	AO720	Back Spring for 49127	7	AO725	Capote Movement Cam for 49127	12
AO716	Stainless Steel Hood Handle for 49127	3	AO721	Rod Screw with Hook M10x60 for 49127	8	AO726	Stainless Steel Screw M8x25 for 49127	13
AO717	Spoiler G12S for 49127	4	AO722	Stainless Steel Self-Locking Nut M8 Din982 for 49127	9	AO727	D6x65 Hook for 49127	14
AO718	Sliding Roller for Spring for 49127	5	AO723	8x16 Stainless Steel Plane Washer Din125 for 49127	10	AO728	Front Panel 11/04 Kromo for 49127	15

PARTS BREAKDOWN

ITEM	MODEL
49127	CD-IT-110

Electric Control Components

Item No.	Description	Position	Item No.	Description	Position	Item No.	Description	Position
AO729	Electric Components Panel 11/04 for 49127	1	AM506	Thermostat 0-90 TR2 C1500+PVC Post.N/ALB for 49127	4	AO621	Relay 230V 50/60Hz Din Rail 3P for 49127	7
AO620	Relay 230V 50/60Hz Din Rail for 49127	2	AO730	Contactor 230V 50/60Hz 4C AC3(6A) for 49127	5			
AM507	Safety Thermostat 110 1500PVC for 49127	3	AO532	90-120-180 Electronic Timer for 49127	6			

Solenoid Valve Group

Item No.	Description	Position	Item No.	Description	Position	Item No.	Description	Position
AO533	Single Solenoid Valve H20 230V for 49127	1	AO535	Gasket 3/4 Load H20 DIS.LS061 for 49127	4	AO537	11,5x19 EPDM Rubber Hose for 49127	5
AO534	Clamp 12/22 AISI 430 for 49127	3	AO536	9,5x16 EPDM Rubber Hose for 49127	5			

DVGW Valve

Item No.	Description	Position	Item No.	Description	Position	Item No.	Description	Position
AO534	Clamp 12/22 AISI 430 for 49127	1	AO540	Valve Nut Cover for 49127	4	AO543	O-Ring 115 KTW for 49127	7
AO538	Drain Valve Center Body for 49127	2	AO541	Valve Gasket for 49127	5	AO536	9,5x16 EPDM Rubber Hose for 49127	8, 9
AO539	Valve Nut for 49127	3	AO542	"5/8" Ball for DVGW Valve 07 for 49127	6	AO537	11,5x19 EPDM Rubber Hose for 49127	8, 9

Rinse Aid Dispenser Group

Item No.	Description	Position	Item No.	Description	Position	Item No.	Description	Position
AO544	Rinse Aid Dosing Pump for 49127	1	AO547	Membrane for Dosing Pump for 49127	4	AO536	9,5x16 EPDM Rubber Hose for 49127	7
AO545	Tecnopro Non Return Valve for 49127	2	AO548	Small Filter for 49127	5	AO550	Y-Piece D.10-12-12 for 49127	8
AO546	Gasket D.22 for 49127	3	AO549	8x15 EPDM Pipe for 49127	6			

PARTS BREAKDOWN

ITEM	MODEL
49127	CD-IT-110

Boiler Group

Item No.	Description	Position	Item No.	Description	Position	Item No.	Description	Position
AO584	6225 O-Ring 160 NBR for 49127	1	AO733	Boiler Insulating D.155x500 for 49127	4	AO557	Heating Element Mounting Bracket D.6,3 for 49127	7
AO731	Boiler D160x490 (AISI 304) for 49127	2	AO734	Insulating Disk D.160 for 49127	5	AO537	11,5x19 EPDM Rubber Hose for 49127	8
AO732	9000W 230V 3 D58 UL Heating Elem. for 49127	3	AO735	Heating Element Cover for 49127	6	AO549	8x15 EPDM Pipe for 49127	9

3 Ways Connection

Item No.	Description	Position	Item No.	Description	Position	Item No.	Description	Position
AO736	Plastic Y-Piece D.12-12-10 for 49127	1	AO738	Pipe-Pass O-Ring for 49127	4	AO741	Hexagonal Nut 3/8" D.10 for 49127	7
AO534	Clamp 12/22 AISI 430 for 49127	2	AO739	Stainless Steel Rinse Pipe Fitting D.10 for 49127	5	AO536	9,5x16 EPDM Rubber Hose for 49127	8
AO737	Rinse Riser 11/04 12/03 for 49127	3	AO740	O-Ring 112 NBR for 49127	6	AO537	11,5x19 EPDM Rubber Hose for 49127	9

Wash Pump Group

Item No.	Description	Position	Item No.	Description	Position	Item No.	Description	Position
AO742	Pump-UL HP1.5 220V/60Hz for 49127	1	AO744	Break Tank Pipe D.28/24 L450 for 49127	4	AO748	Rotating Seals for 49127	8
AO562	Suction Pipe Coupling for 49127	2	AO745	Top Delivery Hose D.50/35 11/03 for 49127	5	AO749	Pump Gasket 1,5HP for 49127	10
AO743	Lower Delivery Pipe Coupling for 49127	3	AO746	Wash Riser G12/03 11S/03 for 49127	6	AO750	Scroll for Pump D.170 for 49127	11
AO567	Drain Hose 1,5MT D.24 for 49127	4	AO747	16 UF Condenser for 49127	7			

PARTS BREAKDOWN

ITEM	MODEL
49127	CD-IT-110

Drain Pump Group

Item No.	Description	Position	Item No.	Description	Position	Item No.	Description	Position
AO572	Drain Pump-UL 230V/60Hz for 49127	1	AO567	Drain Hose 1,5MT D.24 for 49127	3	AO565	Clamp 25/40 AISI 430 for 49127	5
AO573	Pipe Coupling 28x22 L21 for 49127	2	AO744	Break Tank Pipe D.28/24 L450 for 49127	4			

Pressure Switch Group

Item No.	Description	Position	Item No.	Description	Position	Item No.	Description	Position
AO575	Pressure Switch 47-28 UL for 49127	1	AO577	O-Ring Rolmart D14x8x1,5 for 49127	3	AO579	EPDM Hose 4.5x9 for Pressure Switch for 49127	5
AO576	Grey Air Trap Assembly L75 for 49127	2	AO578	Stainless Steel Nut M8 Din934 for 49127	4	AO580	Plastic Clamp 98x2,5 for 49127	6

Wash Arm Group

Item No.	Description	Position	Item No.	Description	Position	Item No.	Description	Position
AO740	O-Ring 112 NBR for 49127	1	AO756	Hub for Rotor 11S 09/98 for 49127	9	AO758	Lower Pipe Coupling L172 for 49127	18
AO739	Stainless Steel Rinse Pipe Fitting D.10 for 49127	2	AO589	Rinse Axle 03 for 49127	10	AO759	Lower Rinse Axle for 49127	19
AO751	Rinse Elbow G1/4" for 49127	3	AO590	Hub for Rinse Rotor 03 for 49127	11	AO584	6225 O-Ring 160 NBR for 49127	20
AO752	Stainless Steel Wash Arms Lower Support 11S for 49127	4	AO599	Upper/Lower Stainless Steel Rinse Assembly 03 for 49127	12	AO582	Wash Arms Lower / Upper Support GS for 49127	21
AO753	Upper Rinse Axle Extension for 49127	5	AO591	Rinse Arm Screw for 49127	13	AO592	Right Rinse Arm Stainless Steel Nozzles/03 for 49127	22
AO754	Nut for Rotor Hub 11S/96 for 49127	6	AO594	Stainless Steel Rinse Nozzle M5 for 49127	15	AO593	Left Rinse Arm Stainless Steel Nozzles/03 for 49127	23
AO741	Hexagonal Nut 3/8" D.10 for 49127	7	AO595	Rinse Arm Plug for 49127	16	AO760	Riser Gasket 51x34x14 for 49127	24
AO755	Wash Rotor for 49127	8	AO757	Spacer for Hub for 49127	17			

PARTS BREAKDOWN

ITEM	MODEL
49127	CD-IT-110

Baskets

Item No.	Description	Position	Item No.	Description	Position
AO600	Plastic Plates Basket 500x500 for 49127	1	AO602	Cutlery Basket - Tight Mesh (Plastic) for 49127	3
AO601	500x500 Large Mesh Glass Basket for 49127	2	AO603	Cutlery Basket for 49127	4

Control Panel and Switches

Item No.	Description	Position	Item No.	Description	Position	Item No.	Description	Position
AO761	Fixed Round Button without Silkscreen Printing. (UL) for 49127	2	AO526	16A Switch UL for 49127	7, 8	AO529	Manometer UL for 49127	12
AO523	Int.Bip.2 Times DIHR/2014 UL for 49127	3	AO763	Push Button Panel for 49127	9	AO524	Pul.Uni. P.S. DIHR/2014 UL for 49127	13
AO522	Int.Bip.On/Off DIHR/2014 UL for 49127	4	AO525	White Pilot Light 220V for 49127	10	AO764	16A Unipolar Switch UL for 49127	14
AO762	Push Button Support for 49127	6	AO528	Thermometer UL Arthermo for 49127	11			

PARTS BREAKDOWN

ITEM	MODEL
49128	CD-IT-130

General Body

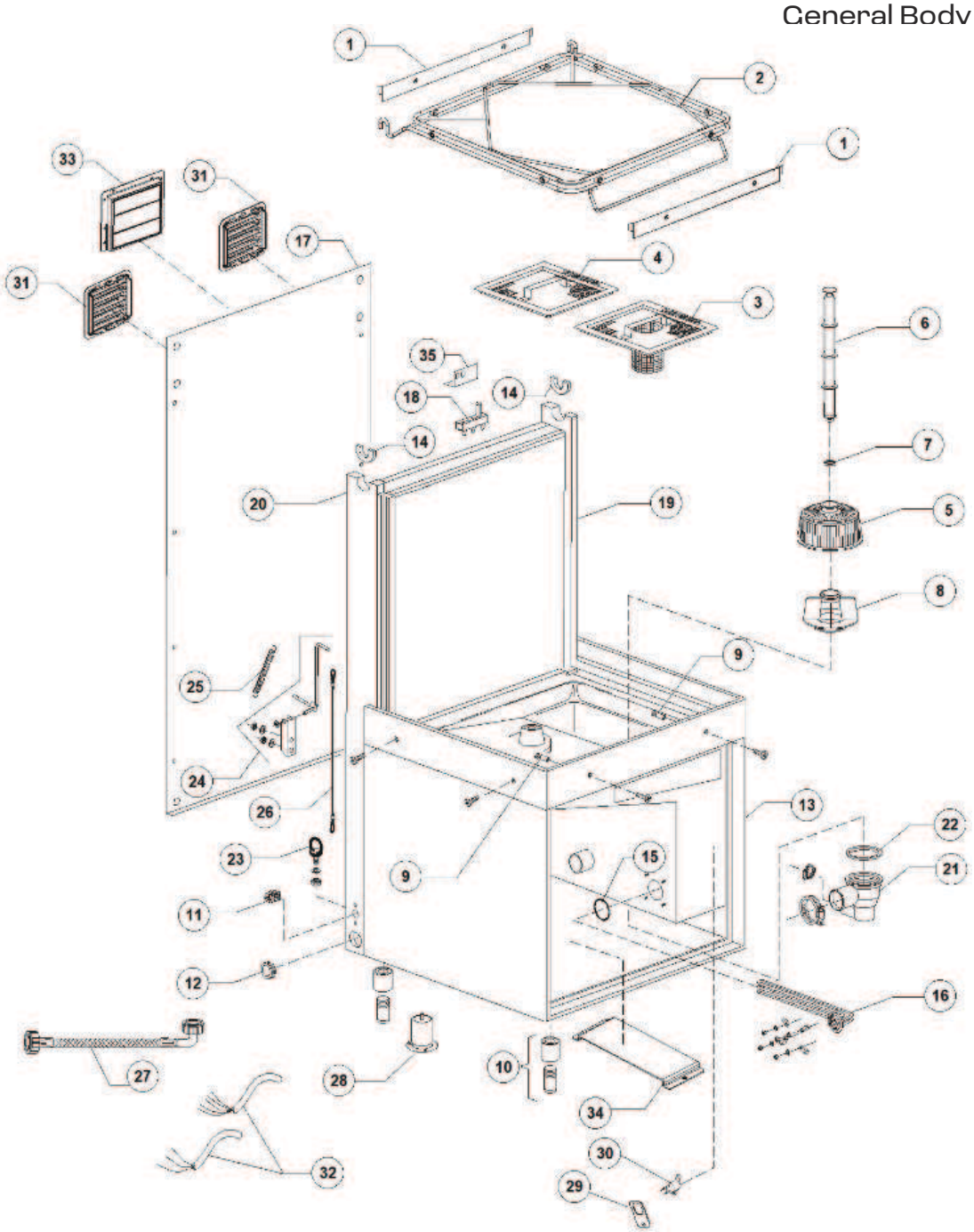

PARTS BREAKDOWN

ITEM	MODEL
49128	CD-IT-130

Hood

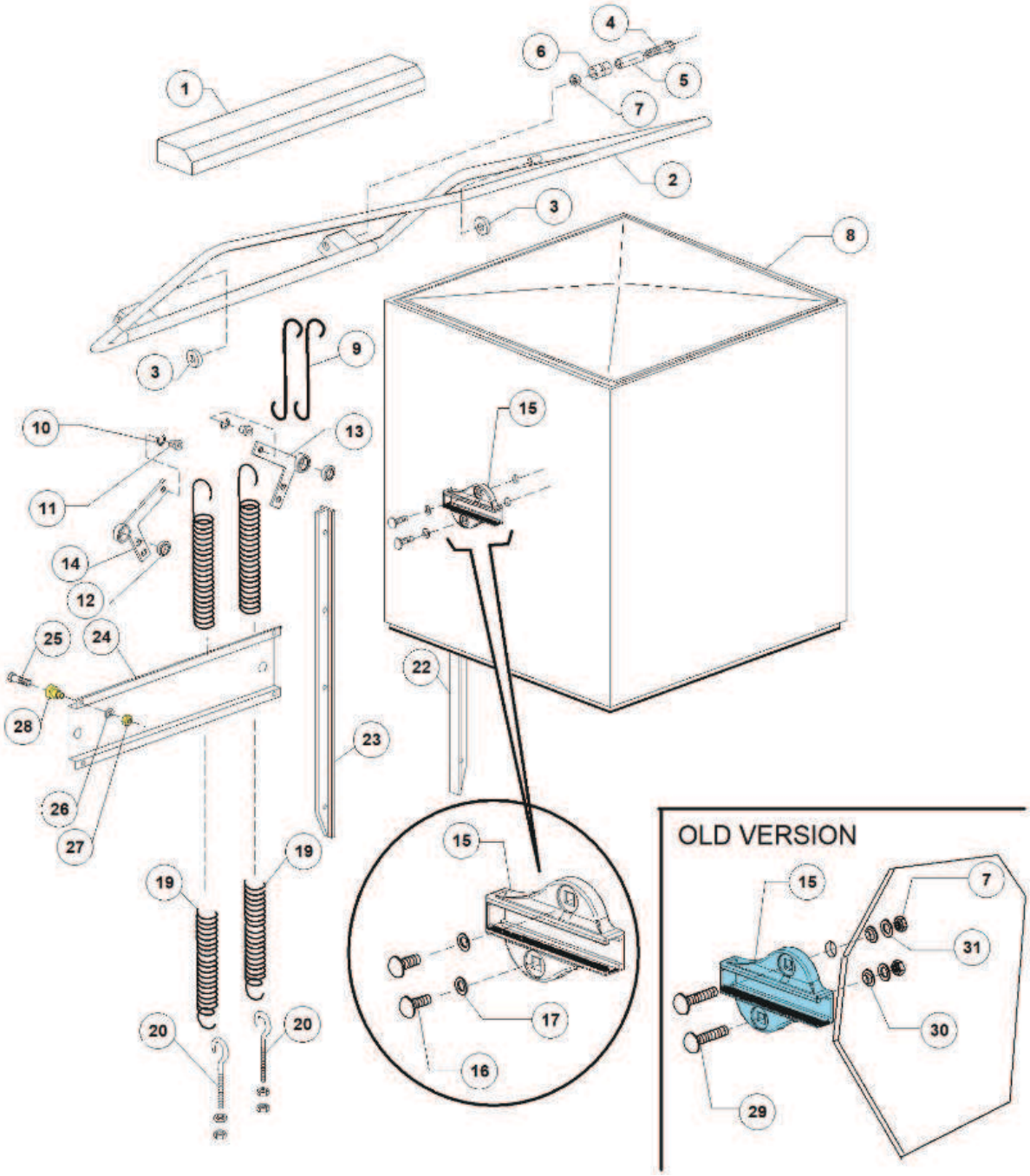

PARTS BREAKDOWN

ITEM	MODEL
49128	CD-IT-130

Control Panel and Switches

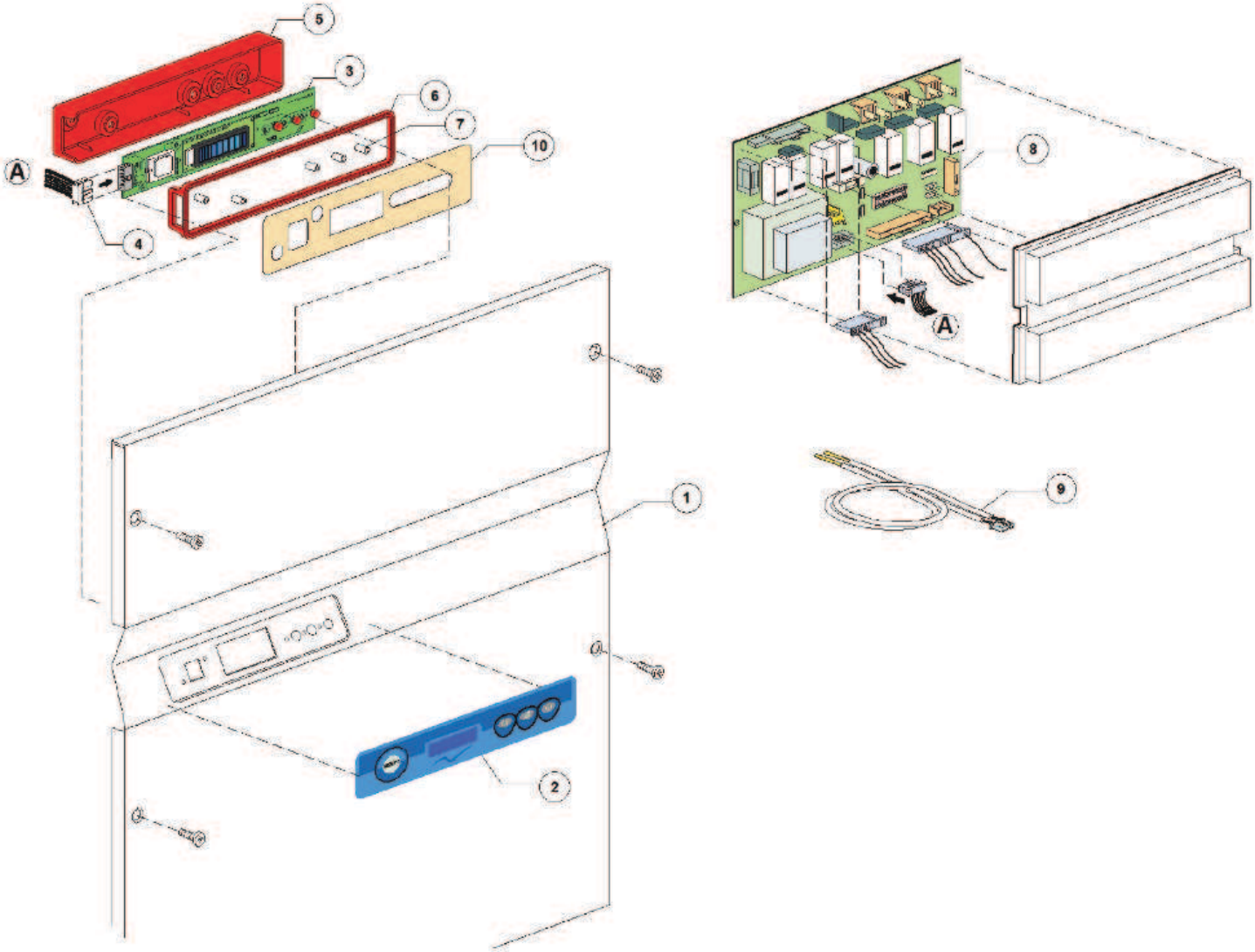

PARTS BREAKDOWN

ITEM	MODEL
49128	CD-IT-130

Electric Control Components

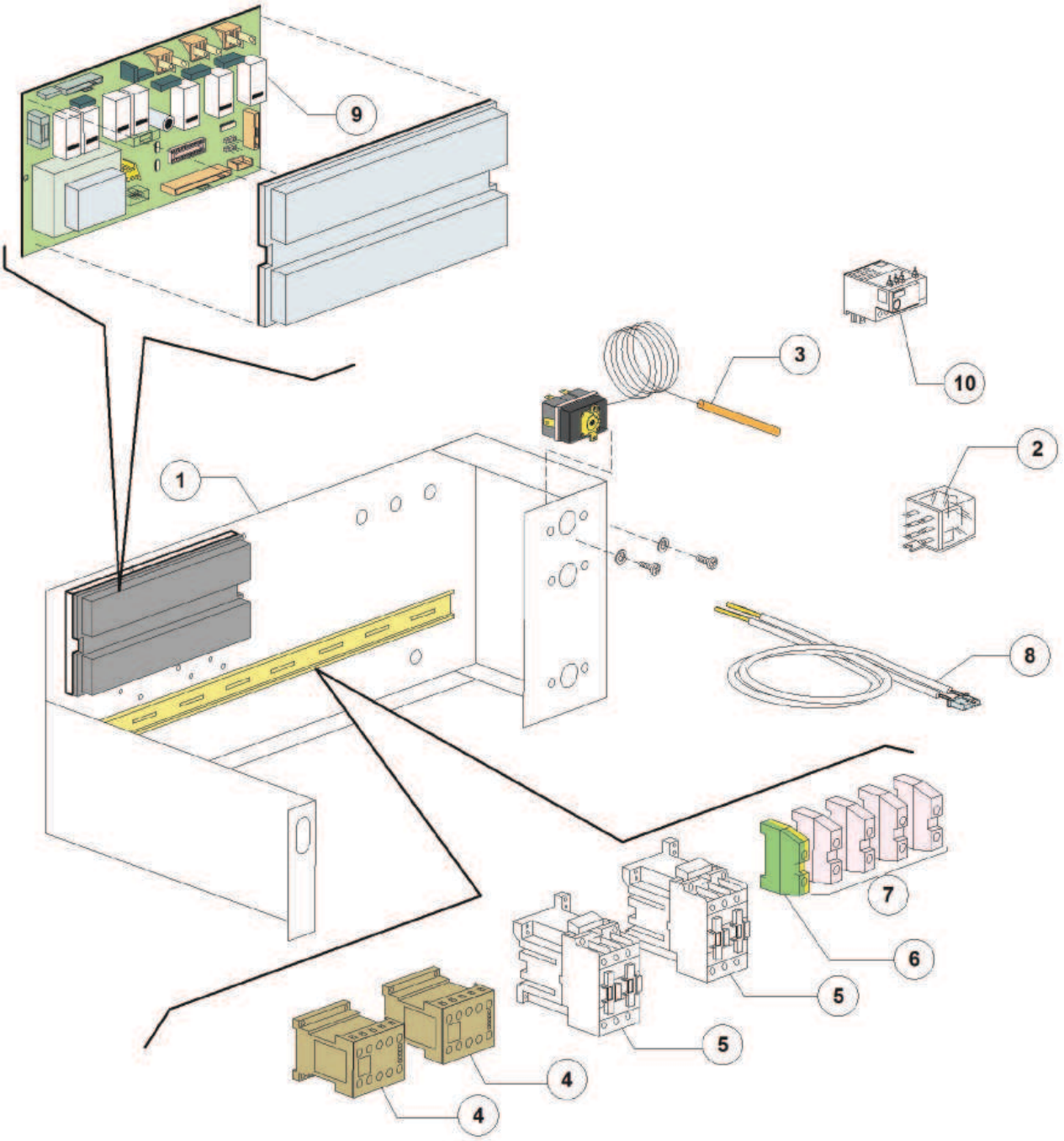

PARTS BREAKDOWN

ITEM	MODEL
49128	CD-IT-130

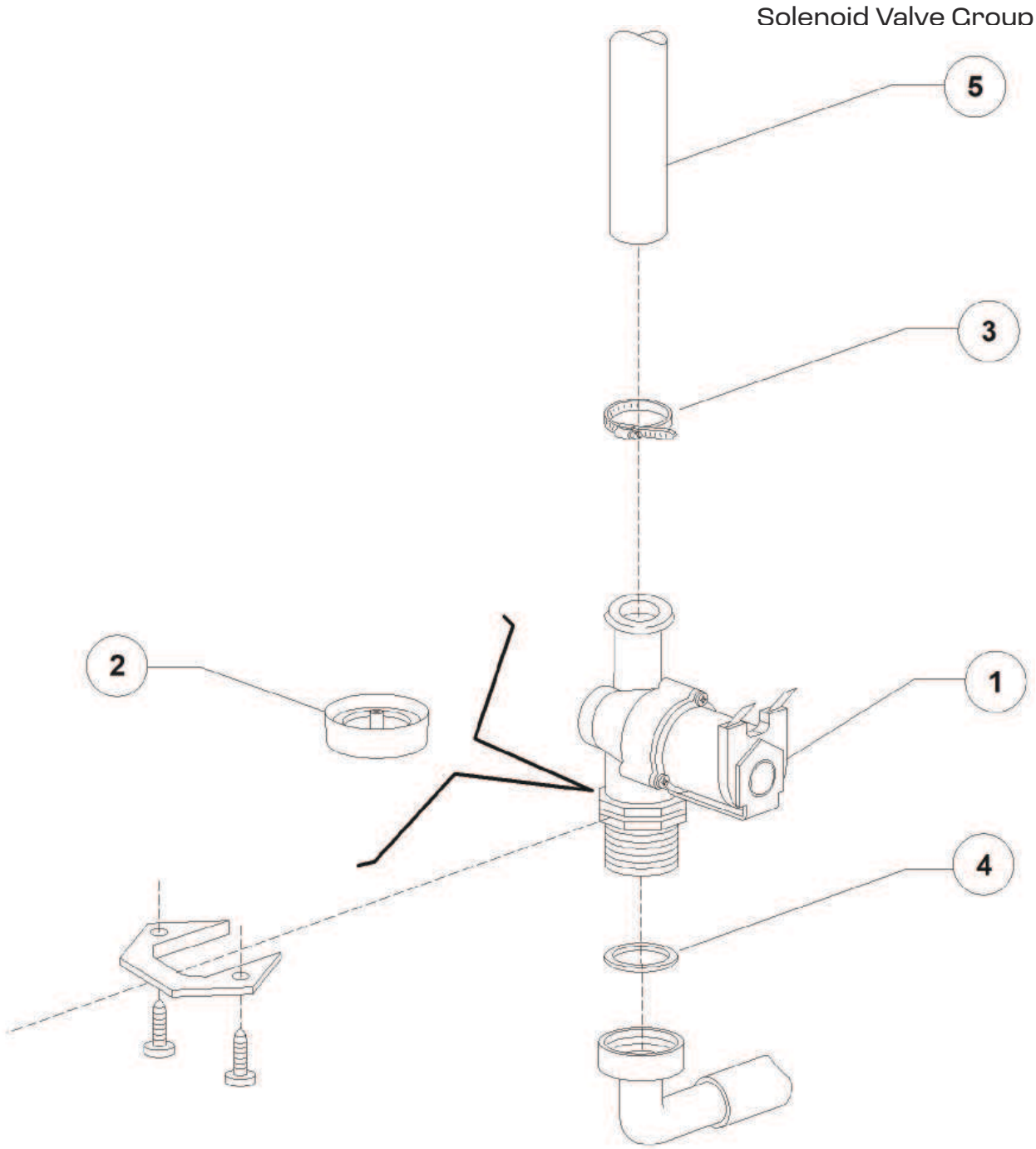

PARTS BREAKDOWN

ITEM	MODEL
49128	CD-IT-130

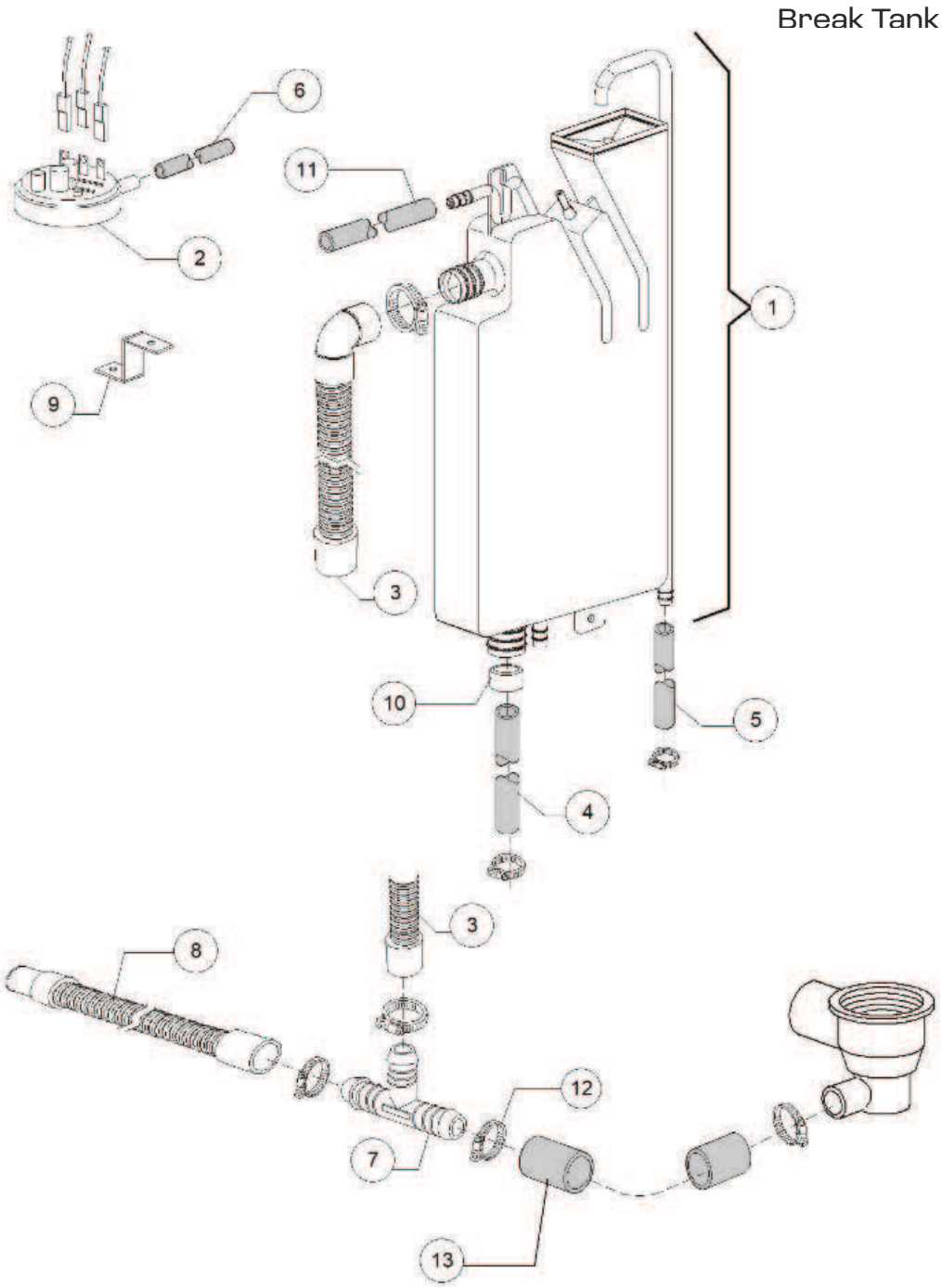

PARTS BREAKDOWN

ITEM	MODEL
49128	CD-IT-130

Rinsing Pump / Booster Pump

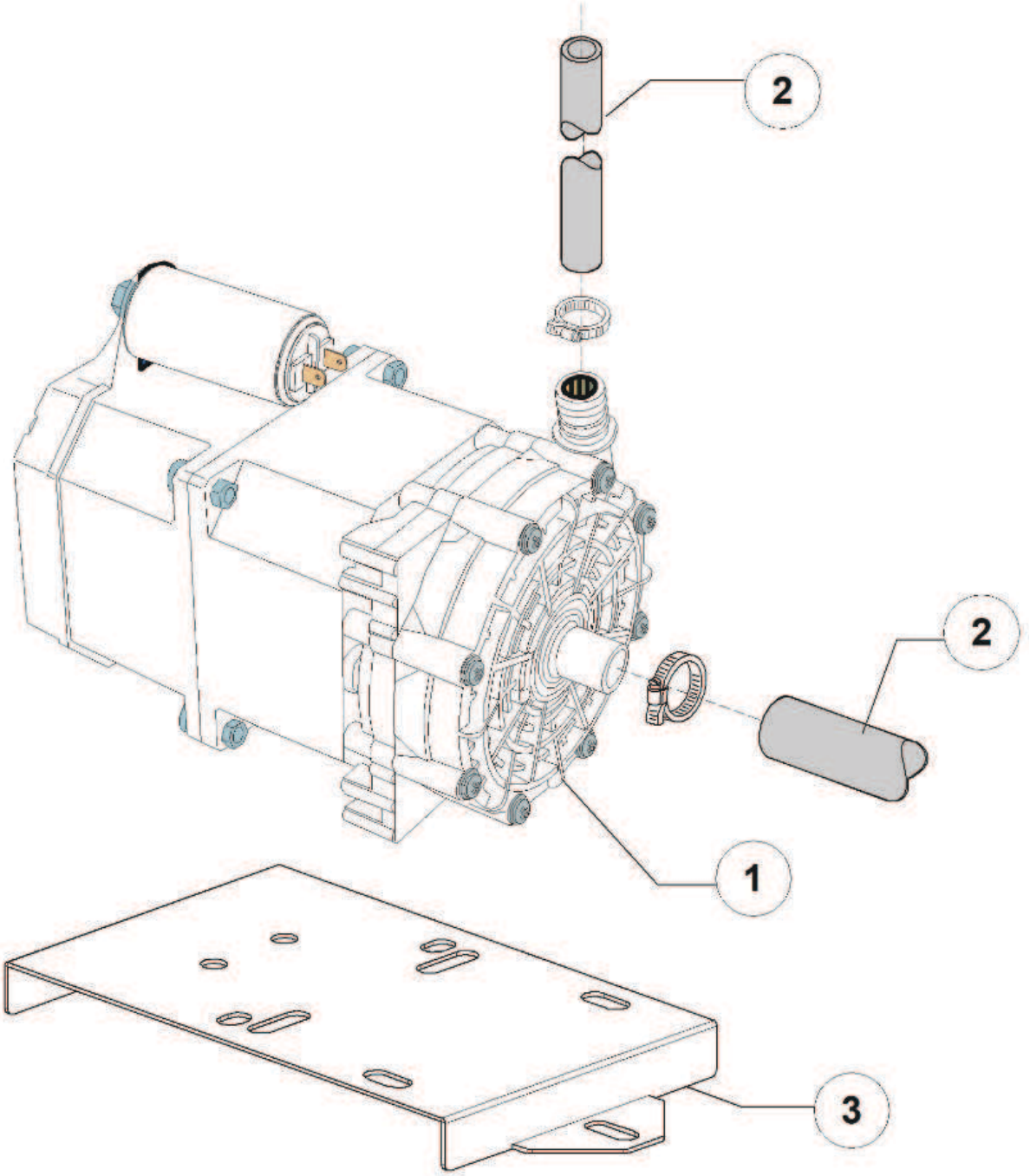

PARTS BREAKDOWN

ITEM	MODEL
49128	CD-IT-130

Rinse Aid Dispenser Group

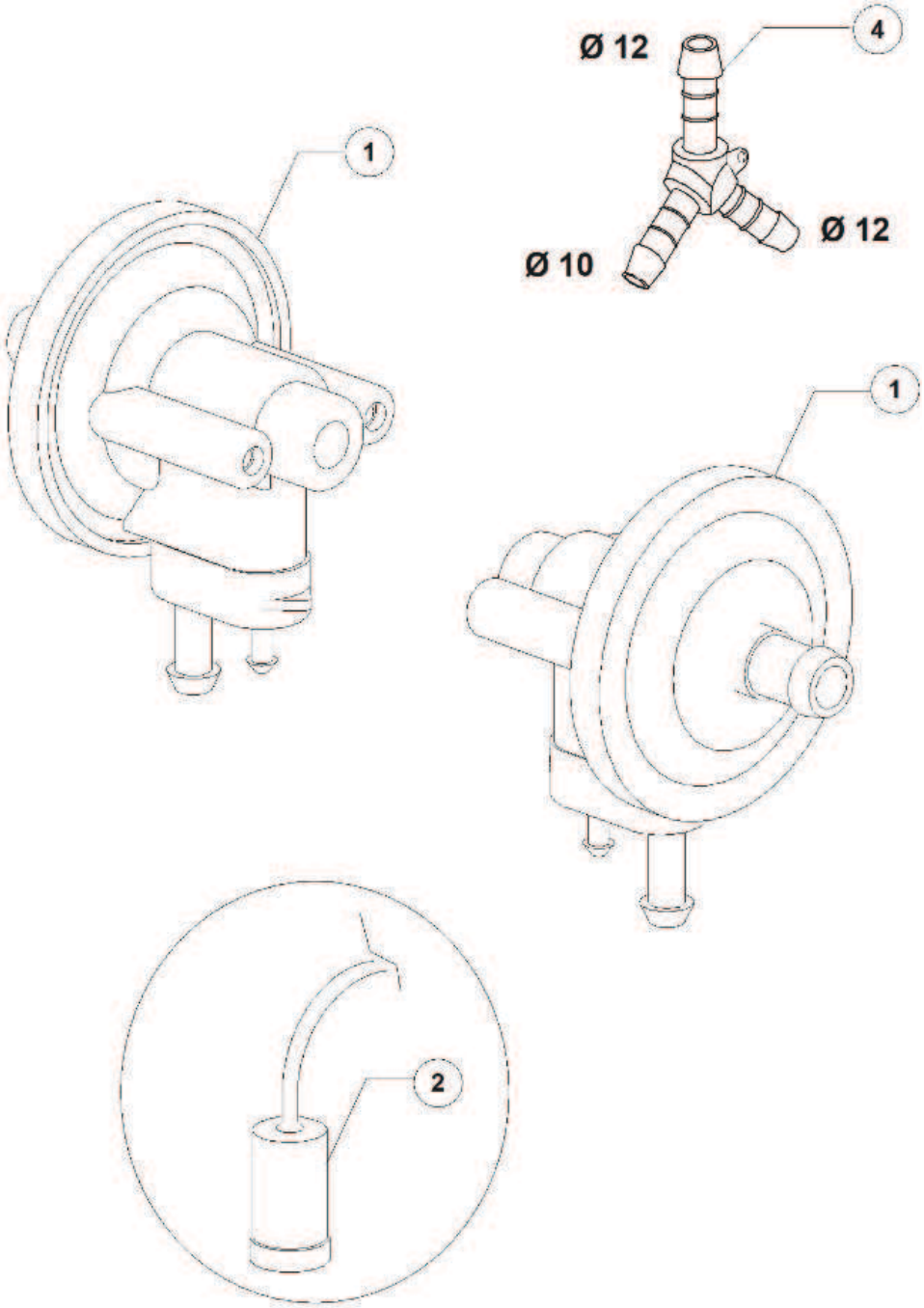

PARTS BREAKDOWN

ITEM	MODEL
49128	CD-IT-130

Boiler Group

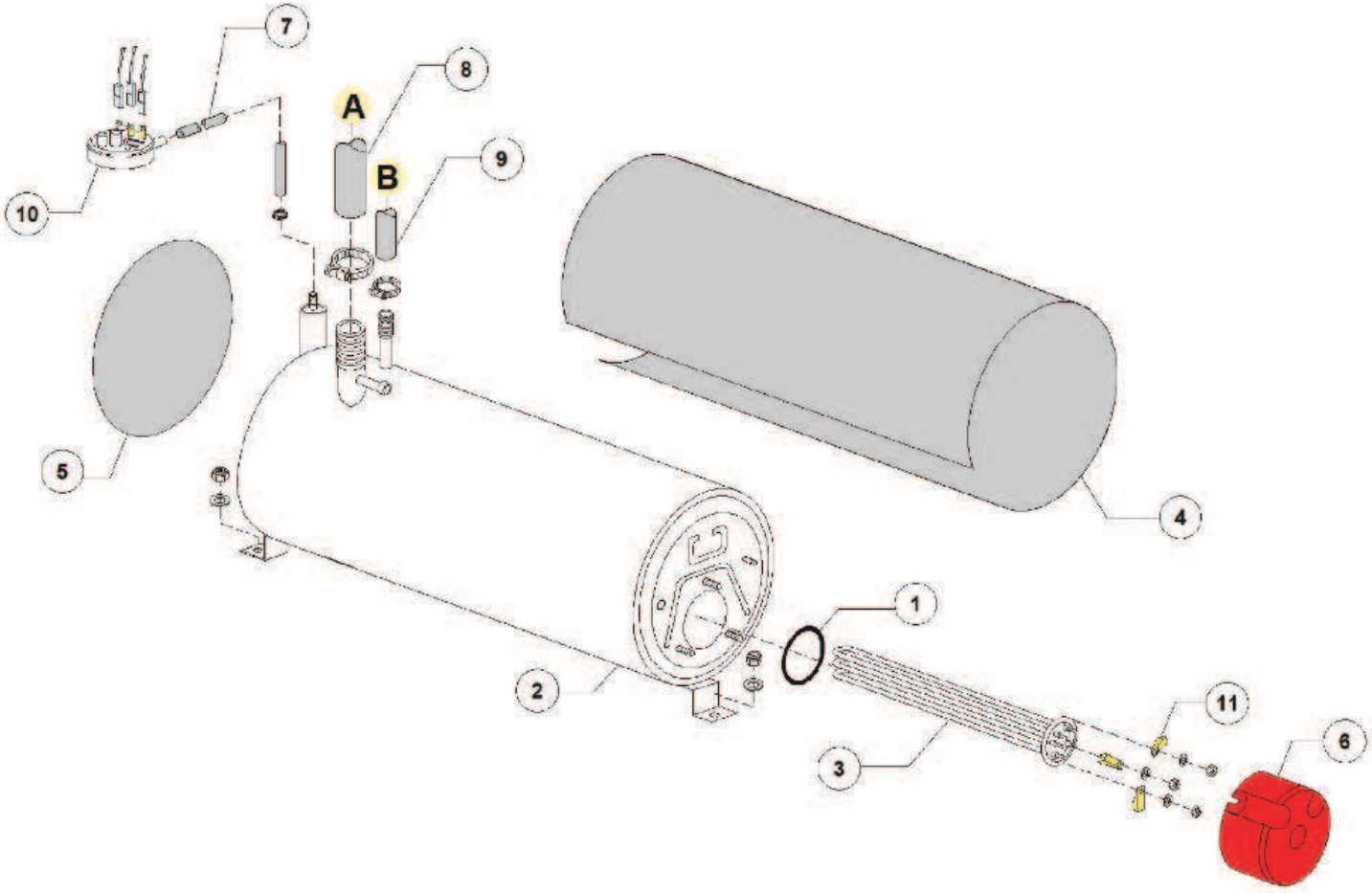

PARTS BREAKDOWN

ITEM	MODEL
49128	CD-IT-130

3 Ways Connection

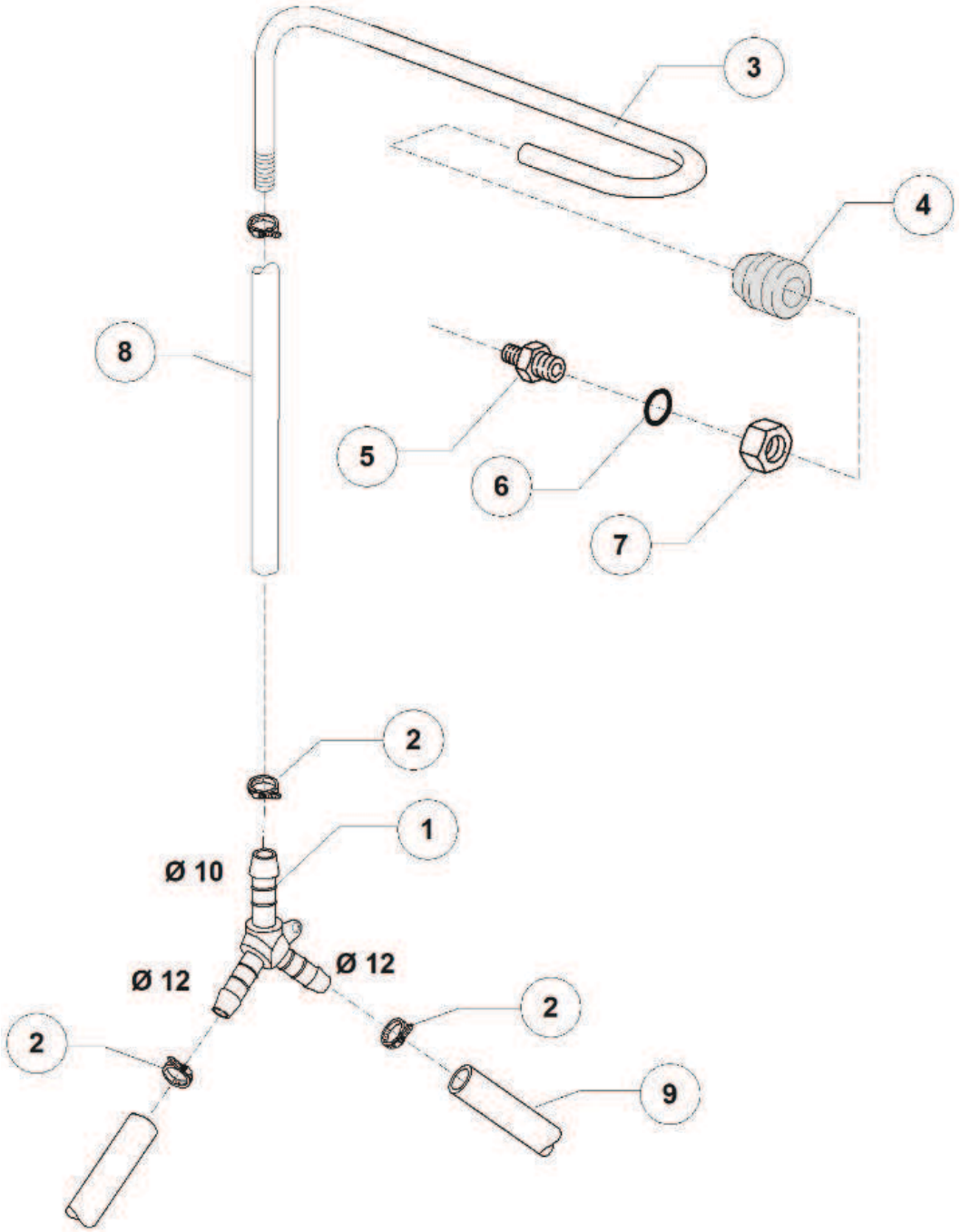

PARTS BREAKDOWN

ITEM	MODEL
49128	CD-IT-130

Wash Pump Group

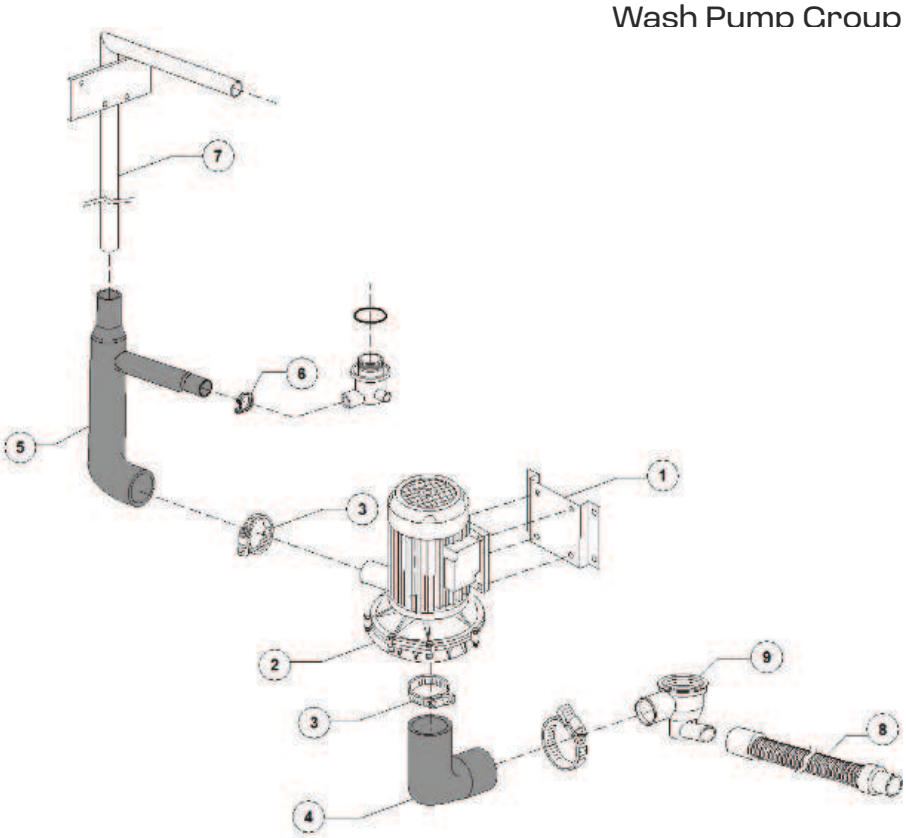

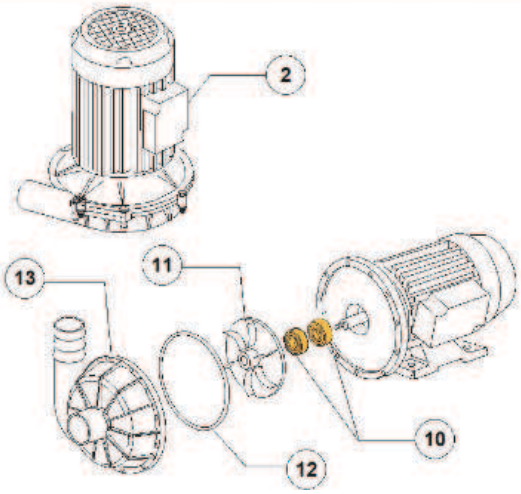

PARTS BREAKDOWN

ITEM	MODEL
49128	CD-IT-130

Drain Pump Group

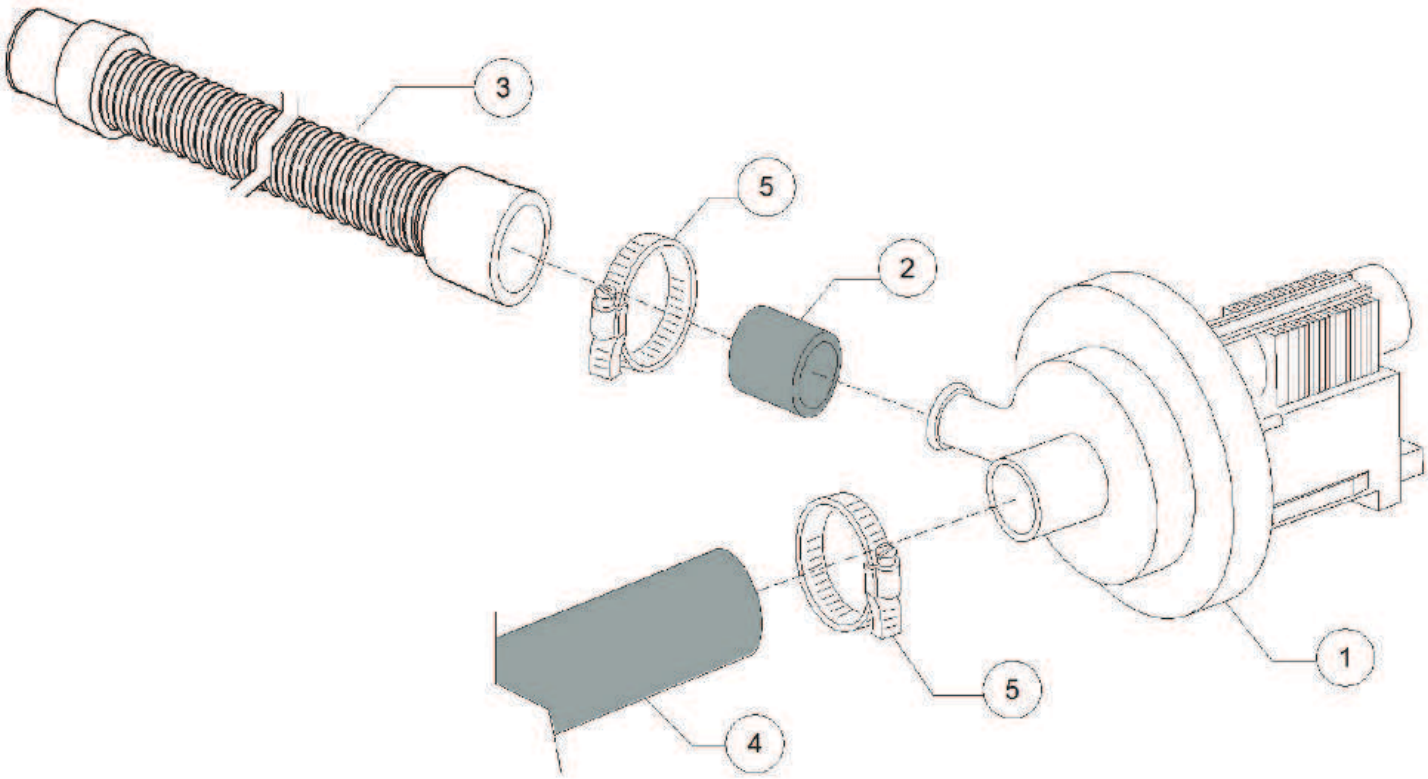

PARTS BREAKDOWN

ITEM	MODEL
49128	CD-IT-130

Pressure Switch Group

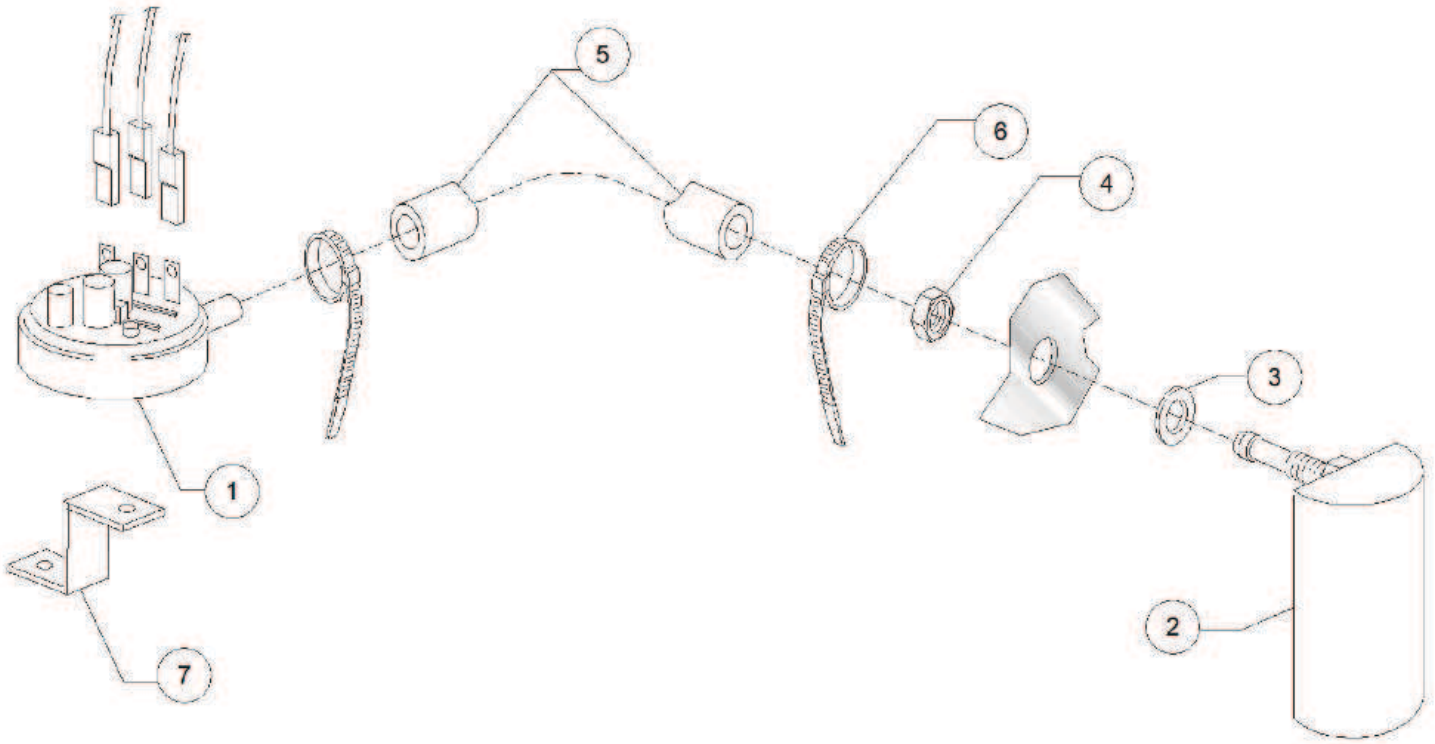

PARTS BREAKDOWN

ITEM	MODEL
49128	CD-IT-130

Washing Arms

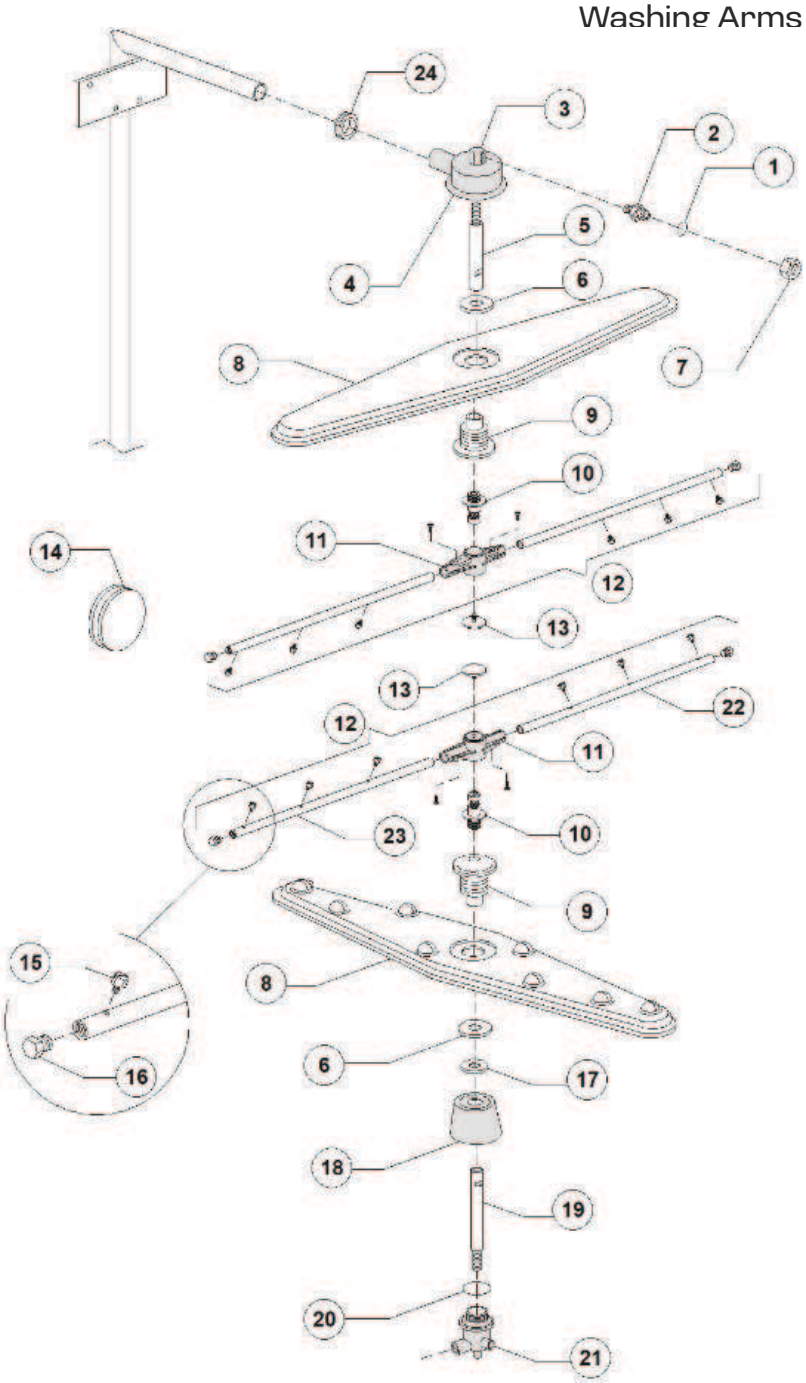

PARTS BREAKDOWN

ITEM	MODEL
49128	CD-IT-130

Baskets

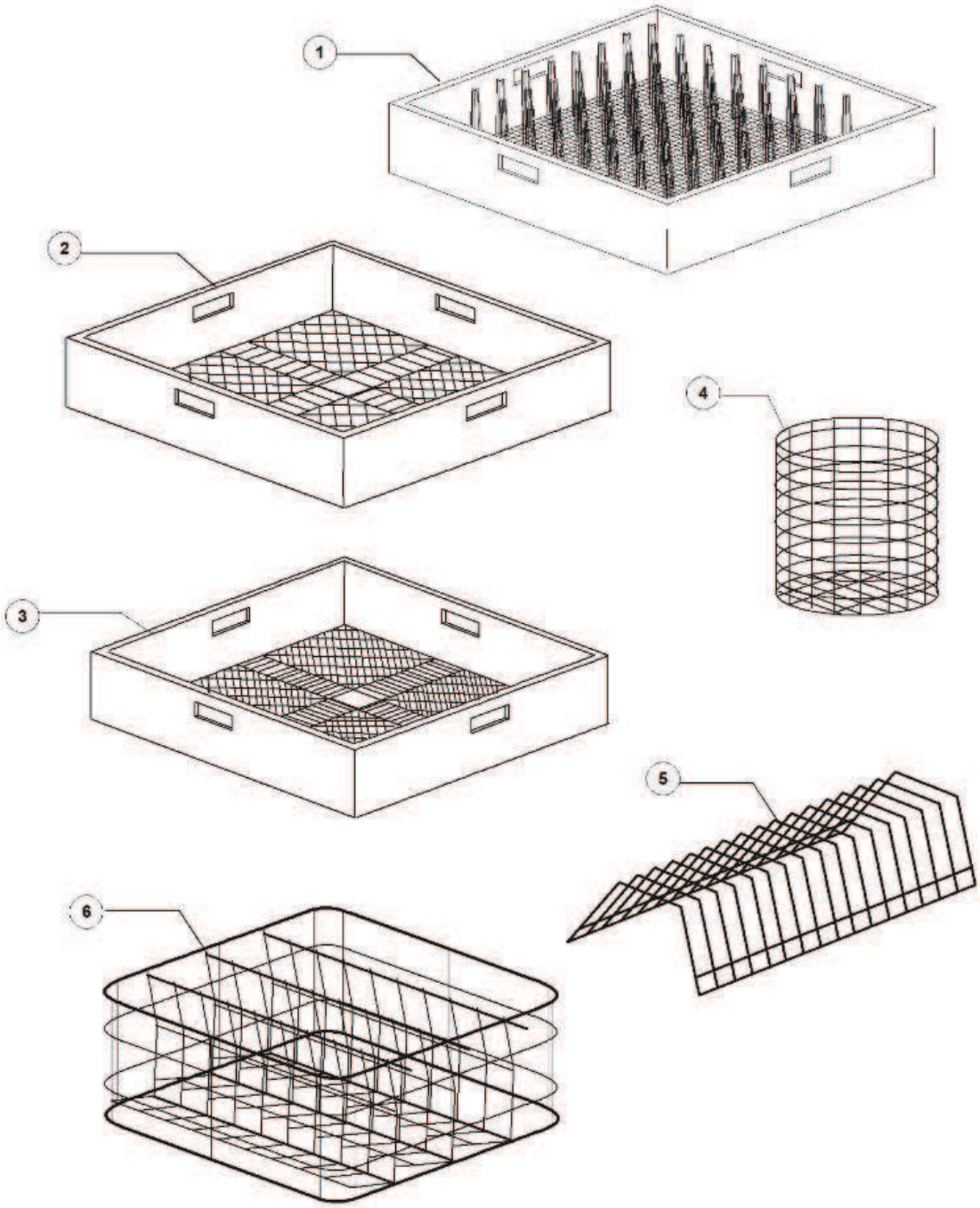

PARTS BREAKDOWN

ITEM	MODEL
49128	CD-IT-130

General Body

Item No.	Description	Position	Item No.	Description	Position	Item No.	Description	Position
AO704	Basket Board for 49128	1	AO697	Rubber Fairlead D.46x50 for 49128	12	AO501	Right Side Scrap Tray for 49128	21
AO695	Stainless Steel Basket Support 12S for 49128	2	AO778	Bodywork 12S for 49128	13	AO483	Riser Gasket D.95x75x3 for 49128	22
AO775	Tank Front Filter for 49128	3	AO694	Right/Left Handle Pilot Bush for 49128	14	AO710	M8 Zinc Plated Male Hook for 49128	23
AO701	Tank Back Filter for 49128	4	AO551	O-Ring 151 NBR for 49128	15	AO708	Safety System Assembly Support for 49128	24
AO776	Overflow Pipe G12/03 for 49128	6	AO779	2700W 230 3 UL Heating Elem. for 49128	16	AO707	Door Spring for 49128	25
AO777	Ferrule for Filter Clutch for 49128	8	AO780	Back Panel 12S UL for 49128	17	AO781	Safety System Rope 12/03 for 49128	26
AO700	Basket Holder Pin Support for 49128	9	AO703	Limit Stop Push Button for 49128	18	AO782	Load Pipe WRAS M1,5x3/4 EN61770 for 49128	27
AO698	Adjustable Foot M10 132-210 2" for 49128	10	AO702	Right Standard for 49128	19	AO504	Ventilation Grid for 49128	31
AO480	Cable-Fastener with Screw for 49128	11	AO696	Left Standard for 49128	20	AO711	Microswitch Support for 49128	35

PARTS BREAKDOWN

ITEM	MODEL
49128	CD-IT-130

Hood

Item No.	Description	Position	Item No.	Description	Position	Item No.	Description	Position
AO717	Spoiler G12S for 49128	1	AO790	Spring Bush for 49128	11	AO797	Hood Left Sliding Guide 12S for 49128	23
AO783	Stainless Steel Hood Handle for 49128	2	AO791	Lever Bearing for 49128	12	AO798	Levers Omega Shaped Support for 49128	24
AO719	Wheel for Basket P3S/P4S8 for 49128	3	AO792	Right Lever for 49128	13	AO799	M10x35 TE Stainless Steel Screw UNI5739 Din933 for 49128	25
AO784	M8x50 TE Stainless Steel Screw for 49128	4	AO793	Left Lever for 49128	14	AO800	M10 Stainless Steel Grower Washer DIN127B for 49128	26
AO785	Hood Roller Spacer for 49128	5	AO725	Capote Movement Cam for 49128	15	AO801	Stainless Steel Nut M10 DIN934 for 49128	27
AO786	Tie Rod Roller G12 for 49128	6	AO726	Stainless Steel Screw M8x25 for 49128	16	AO802	Lifting Rod Pin for 49128	28
AO722	Stainless Steel Self-Locking Nut M8 Din982 for 49128	7	AO794	M8 Stainless Steel Toothed Lock Washer for 49128	17	AO803	Stainless Steel Screw for 49128	29
AO787	Complete Hood G12S for 49128	8	AO795	Back Spring for 49128	19	AO724	Cam Seal Washer D.16 for 49128	30
AO788	Hood Handle Tie Rod for 49128	9	AO721	Rod Screw with Hook M10x60 for 49128	20	AO723	8x16 Stainless Steel Plane Washer Din125 for 49128	31
AO789	Snap Ring D.10 Stainless Steel for 49128	10	AO796	Hood Right Sliding Guide 12S for 49128	22			

Control Panel and Switches

Item No.	Description	Position	Item No.	Description	Position	Item No.	Description	Position
AO804	Entire Top Sill Kromo Medium for 49128	1	AO808	Electronic Board Protection Box 560051 for 49128	5	AO812	Probe UL Mainboard for 49128	9
AO805	Control Overlay Kromo for 49128	2	AO809	Protection Box Gasket DW560051/A for 49128	6	AO813	Push Button Panel Insulating Protection for 49128	10
AO806	Key-Board with Display 122x32 Vers.09 for 49128	3	AO810	Mainboard Spacer D.8x10 for 49128	7			
AO807	Ribbon Cable F16p L1000 for 49128	4	AO811	Mainboard Top/Hood Plus UL 2010 (BL) for 49128	8			

PARTS BREAKDOWN

ITEM	MODEL
49128	CD-IT-130

Electric Control Components

Item No.	Description	Position	Item No.	Description	Position	Item No.	Description	Position
AO814	Electric Components Panel 12/03 for 49128	1	AO531	Contactor 36A/20A 3NA 230V 50-60Hz for 49128	5	AO811	Mainboard Top/Hood Plus UL 2010 (BL) for 49128	9
AO815	Tripolar Relay 16A 230VAC 50/60Hz for 49128	2	AO816	Terminal 6/8mmq Yellow/Green for 49128	6	AO818	Thermal Relay 4.2-5.7A ABB for 49128	10
AM507	Safety Thermostat 110 1500PVC for 49128	3	AO817	Terminal 6mmq for 49128	7			
AO730	Contactor 230V 50/60Hz 4C AC3(6A) for 49128	4	AO812	Probe UL Mainboard for 49128	8			

Solenoid Valve Group

Item No.	Description	Position	Item No.	Description	Position	Item No.	Description	Position
AO533	Single Solenoid Valve H20 230V for 49128	1	AO535	Gasket 3/4 Load H20 DIS.LS061 for 49128	4	AO537	11,5x19 EPDM Rubber Hose for 49128	5
AO534	Clamp 12/22 AISI 430 for 49128	3	AO536	9,5x16 EPDM Rubber Hose for 49128	5	AO819	PVC WRAS Rubber Hose for 49128	5

Break Tank

Item No.	Description	Position	Item No.	Description	Position	Item No.	Description	Position
AO820	Break Tank Assembly 3.5LT for 49128	1	AO823	Pipe Coupling BT/Atmosp.Boiler 36x28x500 for 49128	4	AO567	Drain Hose 1,5MT D.24 for 49128	8
AO575	Pressure Switch 47-28 UL for 49128	2	AO819	PVC WRAS Rubber Hose for 49128	5	AO537	11,5x19 EPDM Rubber Hose for 49128	11
AO821	Break Tank Long Pipe D.28/24 L1070 for 49128	3	AO579	EPDM Hose 4.5x9 for Pressure Switch for 49128	6	AO565	Clamp 25/40 AISI 430 for 49128	12
AO822	Drain Hose 1,5MT 24-28 for 49128	3	AO824	Plastic Y-Piece D.25 for 49128	7	AO574	D.28 EPDM Pipe for 49128	13

Rinsing Pump / Booster Pump

Item No.	Description	Position	Item No.	Description	Position	Item No.	Description	Position
AO825	Rinse Pump 220-240V/60Hz (Plus) UL for 49128	1	AO537	11,5x19 EPDM Rubber Hose for 49128	2	AO826	Booster Pump Support for 49128	3

PARTS BREAKDOWN

ITEM	MODEL
49128	CD-IT-130

Rinse Aid Dispenser Group

Item No.	Description	Position	Item No.	Description	Position
AO827	Rinse Aid Dosing Pump for 49128	1	AO828	Dosing Support (10/96) for 49128	3
AO548	Small Filter for 49128	2	AO550	Y-Piece D.10-12-12 for 49128	4

Boiler Group

Item No.	Description	Position	Item No.	Description	Position	Item No.	Description	Position
AO584	6225 O-Ring 160 NBR for 49128	1	AO831	Insulating Disk D.190 for 49128	5	AO537	11,5x19 EPDM Rubber Hose for 49128	9
AO829	Atmospheric Boiler D190x490 BA(AISI 304) for 49128	2	AO735	Heating Element Cover for 49128	6	AO575	Pressure Switch 47-28 UL for 49128	10
AO732	9000W 230V 3 D58 UL Heating Elem. for 49128	3	AO579	EPDM Hose 4.5x9 for Pressure Switch for 49128	7	AO557	Heating Element Mounting Bracket D.6,3 for 49128	11
AO830	Boiler Insulating ATM D190 for 49128	4	AO823	Pipe Coupling BT/Atmosp.Boiler 36x28x500 for 49128	8			

3 Ways Connection

Item No.	Description	Position	Item No.	Description	Position	Item No.	Description	Position
AO736	Plastic Y-Piece D.12-12-10 for 49128	1	AO738	Pipe-Pass O-Ring for 49128	4	AO741	Hexagonal Nut 3/8" D.10 for 49128	7
AO534	Clamp 12/22 AISI 430 for 49128	2	AO739	Stainless Steel Rinse Pipe Fitting D.10 for 49128	5	AO536	9,5x16 EPDM Rubber Hose for 49128	8
AO737	Rinse Riser 11/04 12/03 for 49128	3	AO740	O-Ring 112 NBR for 49128	6	AO537	11,5x19 EPDM Rubber Hose for 49128	9

PARTS BREAKDOWN

ITEM	MODEL
49128	CD-IT-130

Wash Pump Group

Item No.	Description	Position	Item No.	Description	Position	Item No.	Description	Position
AO832	Pump Support G12 for 49128	1	AO835	Delivery Pipe Coupling for 49128	5	AO501	Right Side Scrap Tray for 49128	9
AO833	Pump-UL HP2.0 220-240/380-415V/60Hz for 49128	2	AO836	30/45 Clamp (Minimum 2 Pieces) for 49128	6	AO568	Rotating Seals for 49128	10
AO566	Clamp 50/70 AISI 430 for 49128	3	AO746	Wash Riser G12/03 11S/03 for 49128	7	AO837	OR 1225 Gasket for 49128	12
AO834	Suction Pipe Coupling for 49128	4	AO567	Drain Hose 1,5MT D.24 for 49128	8	AO838	Scroll for 49128	13

Drain Pump Group

Item No.	Description	Position	Item No.	Description	Position	Item No.	Description	Position
AO572	Drain Pump-UL 230V/60Hz for 49128	1	AO567	Drain Hose 1,5MT D.24 for 49128	3	AO565	Clamp 25/40 AISI 430 for 49128	5
AO573	Pipe Coupling 28x22 L21 for 49128	2	AO574	D.28 EPDM Pipe for 49128	4			

Pressure Switch Group

Item No.	Description	Position	Item No.	Description	Position	Item No.	Description	Position
AO839	Pressure Switch 250-40 UL for 49128	1	AO577	O-Ring Rolmart D14x8x1,5 for 49128	3	AO579	EPDM Hose 4.5x9 for Pressure Switch for 49128	5
AO576	Grey Air Trap Assembly L90 for 49128	2	AO578	Stainless Steel Nut M8 Din934 for 49128	4	AO580	Plastic Clamp 98x2,5 for 49128	6

PARTS BREAKDOWN

ITEM	MODEL
49128	CD-IT-130

Washing Arms

Item No.	Description	Position	Item No.	Description	Position	Item No.	Description	Position
AO740	O-Ring 112 NBR for 49128	1	AO756	Hub for Rotor 11S 09/98 for 49128	9	AO843	Wash Arms Lower Support G12 for 49128	18
AO739	Stainless Steel Rinse Pipe Fitting D.10 for 49128	2	AO589	Rinse Axle 03 for 49128	10	AO844	Lower Rinse Axle G12S for 49128	19
AO751	Rinse Elbow G1/4" for 49128	3	AO590	Hub for Rinse Rotor 03 for 49128	11	AO584	6225 O-Ring 160 NBR for 49128	20
AO840	Stainless Steel Wash Arms Lower Support G12 for 49128	4	AO599	Upper/Lower Stainless Steel Rinse Assembly 03 for 49128	12	AO845	Wash Arms' Lower Support G12 for 49128	21
AO753	Upper Rinse Axle Extensions for 49128	5	AO591	Rinse Arm Screw for 49128	13	AO592	Right Rinse Arm Stainless Steel Nozzles/03 for 49128	22
AO754	Nut for Rotor Hub 11S/96 for 49128	6	AO594	Stainless Steel Rinse Nozzle M5 for 49128	15	AO593	Left Rinse Arm Stainless Steel Nozzles/03 for 49128	23
AO741	Hexagonal Nut 3/8" D.10 for 49128	7	AO595	Rinse Arm Plug for 49128	16	AO760	Riser Gasket 51x34x14 for 49128	24
AO841	Wash Rotor for 49128	8	AO842	Reduction Flow Ring for 49128	17			

Baskets

Item No.	Description	Position	Item No.	Description	Position
AO600	Plastic Plates Basket 500x500 for 49128	1	AO602	Cutlery Basket - Tight Mesh (Plastic) for 49128	3
AO601	500x500 Large Mesh Glass Basket for 49128	2	AO603	Cutlery Basket for 49128	4

ELECTRICAL SCHEMATICS

ITEM	MODEL
49125	CD-IT-50-1

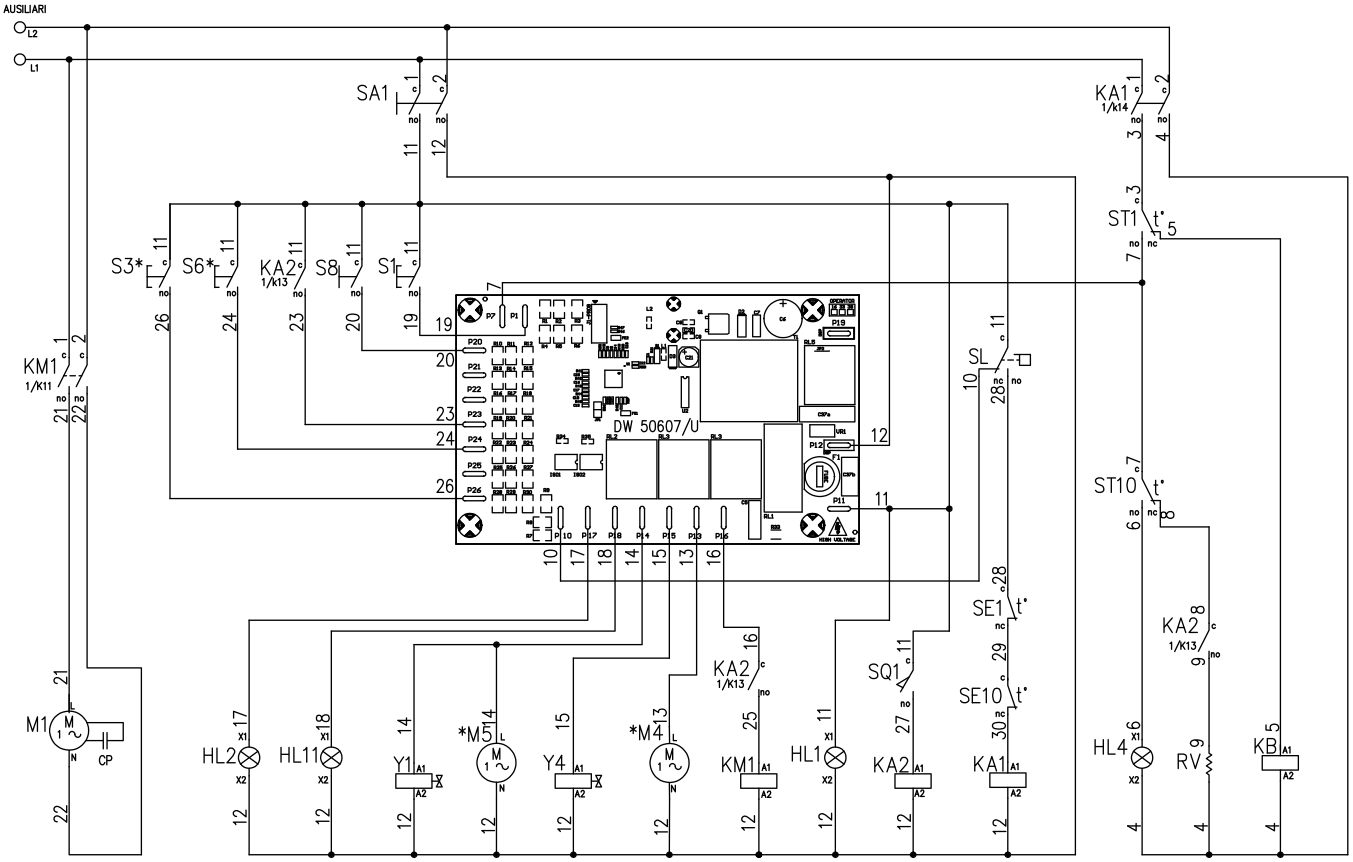

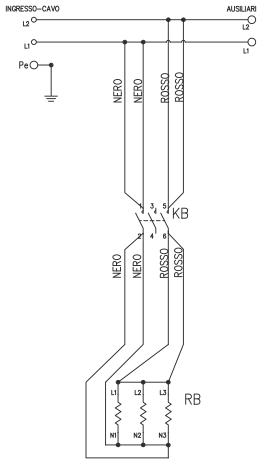

ELECTRICAL SCHEMATICS

ITEM	MODEL
49126	CD-IT-50-2

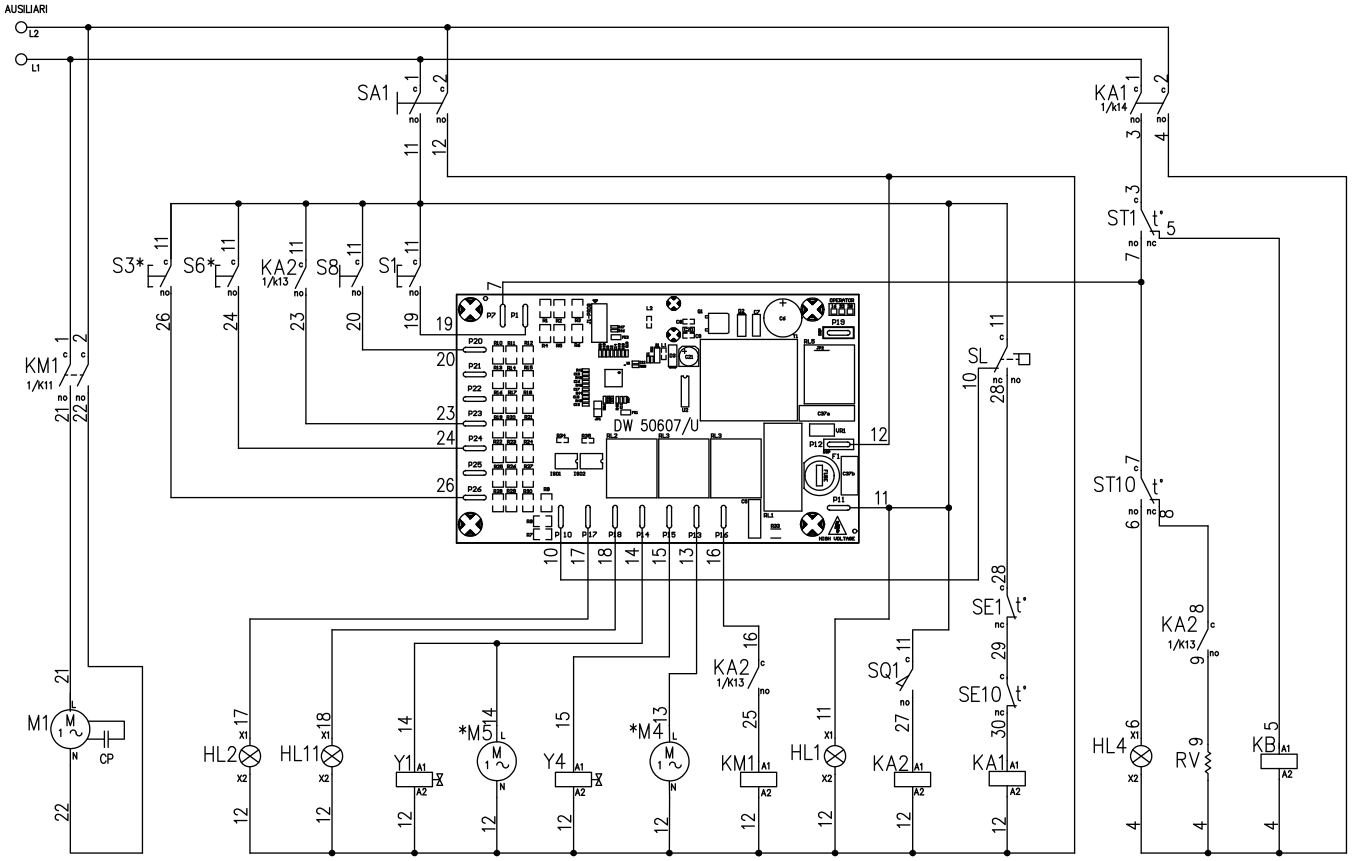

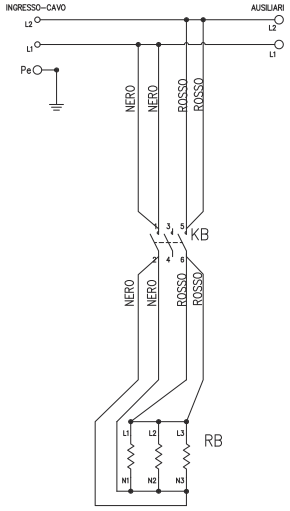

ELECTRICAL SCHEMATICS

ITEM	MODEL
49127	CD-IT-110

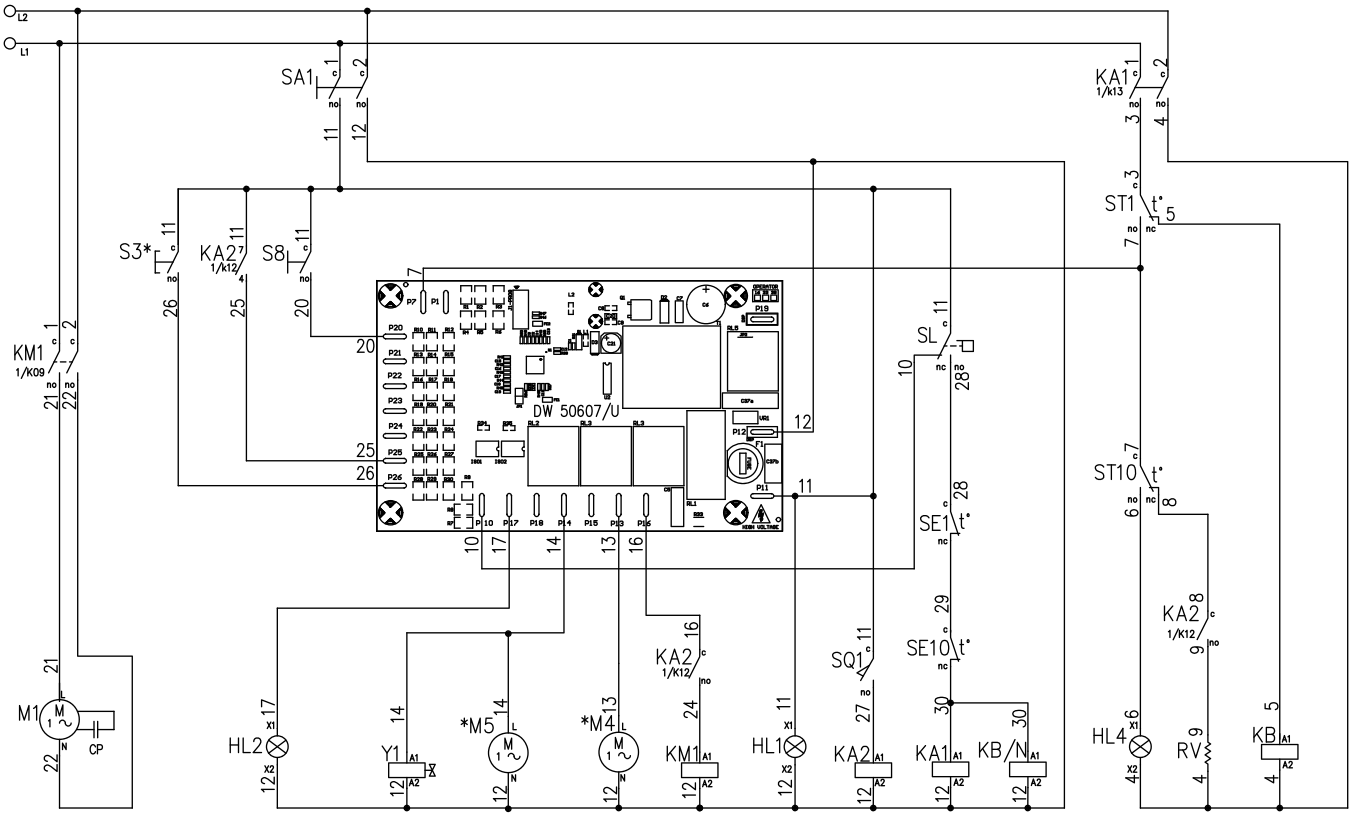

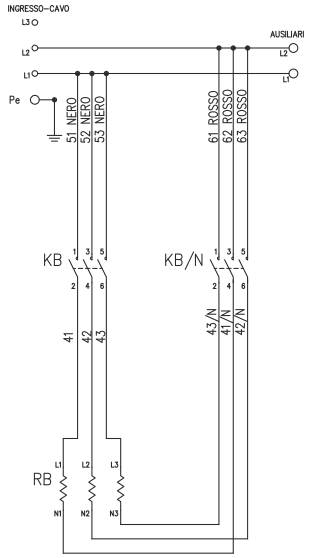

ELECTRICAL SCHEMATICS

ITEM	MODEL
49128	CD-IT-130

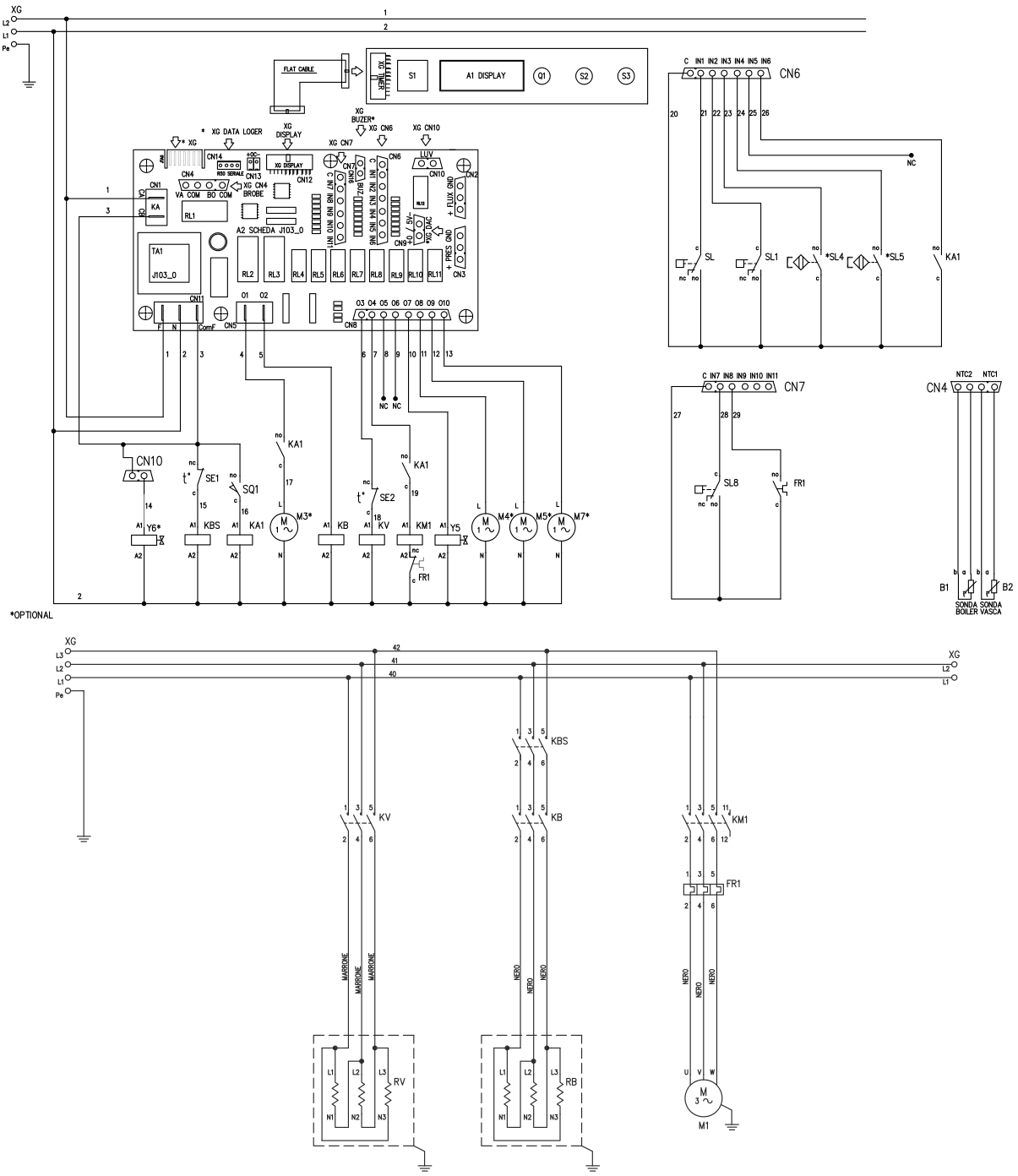

NOTES

NOTES

WARRANTY REGISTRATION

Thank you for purchasing an Trento product. To register your warranty for this product, complete the information below, tear off the card at the perforation and then send to the address specified below. You can also register online by visiting:

Merci d'avoir acheté un produit Trento. Pour enregistrer votre garantie pour ce produit, complétez les informations ci-dessous, détachez la carte au niveau de la perforation, puis l'envoyer à l'adresse spécifié ci-dessous. Vous pouvez également vous inscrire en ligne en visitant:

Gracias por comprar un producto Trento usted. Para registrar su garantía para este producto, complete la información a continuación, cortar la tarjeta en la perforación y luego enviarlo a la dirección indicada a continuación. También puede registrarse en línea en:

https://omcan.com/warranty-registration/

For mailing in Canada
Pour postale au Canada
Por correo en Canadá

TRENTO
PRODUCT WARRANTY REGISTRATION
3115 Pepper Mill Court,
Mississauga, Ontario
Canada, L5L 4X5

For mailing in the US
Pour diffusion aux États-Unis
Por correo en los EE.UU.

TRENTO
PRODUCT WARRANTY REGISTRATION
4450 Witmer Industrial Estates, Unit 4,
Niagara Falls, New York
USA, 14305

or email to: trentoservice@trentoequipment.com

Purchaser's Information

Name: _____ Company Name: _____

Address: _____

Telephone: _____

City: _____ Province or State: _____ Postal or Zip: _____ Email Address: _____

Country: _____ Type of Company:

☐ Restaurant ☐ Bakery ☐ Deli

Dealer from which Purchased: _____ ☐ Butcher ☐ Supermarket ☐ Caterer

Dealer City: _____ Dealer Province or State: _____ ☐ Institution *(specify)*: _____

Invoice: _____ ☐ Other *(specify)*: _____

Model Name: _____ Model Number: _____ Serial Number: _____

Machine Description: _____

Date of Purchase (MM/DD/YYYY): _____ Date of Installation (MM/DD/YYYY): _____

Would you like to extend the warranty? ☐ Yes ☐ No

Thank you for choosing Trento | Merci d'avoir choisi Trento | Gracias por elegir Trento

TRENTO

ELEVATING CULINARY EXCELLENCE

TRENTO IS A SIGNATURE LINE OF PROFESSIONAL RESTAURANT EQUIPMENT FROM OMCAN OFFERING PREMIUM EUROPEAN BRANDS TO THE NORTH AMERICAN MARKET.

Thank you for your purchase!

Follow us on social media
@trentoequipment

1-833-487-3686 www.trentoequipment.com trentoservice@trentoequipment.com