MASTER-BILT®
Refrigeration Solutions

MULTI-COMPRESSOR REFRIGERATION SYSTEMS

Increase Operating Efficiency By Combining Multiple Refrigeration Systems into One

Quality Management
ISO 9001:2015
www.dekracert.com
DEKRA
Certified

WHY CHOOSE A MULTI-COMPRESSOR SYSTEM

Modular MRS Series multi-compressor systems let operators consolidate all refrigeration into one remote system for greater efficiency.

Energy Efficiency

Each piece of refrigeration equipment—reach-ins, walk-ins, ice machines—has its own system that releases heat into the kitchen or store, increasing the air conditioning load and energy use.

By consolidating these into a single remote system, typically roof-mounted, businesses can remove excess heat, lower AC demand, reduce indoor noise and extend equipment life.

Design Efficiency

Multi-compressor systems use individual modules to manage the load from each piece of equipment. Each module includes a compressor and components pre-piped to a condenser, which is sectioned to prevent total system failure. If one section is damaged, it can be replaced without replacing the entire coil.

Installation Efficiency

Conventional remote systems require a roof penetration for each condensing unit. More systems mean more holes. A multi-compressor system needs just one, cutting installation costs and leak risk.

Electrical setup is also simpler, with a pre-wired panel and single-point connection.

Multi-compressor systems feature individual refrigeration modules connected to a condenser coil.

MRS System Layout Example

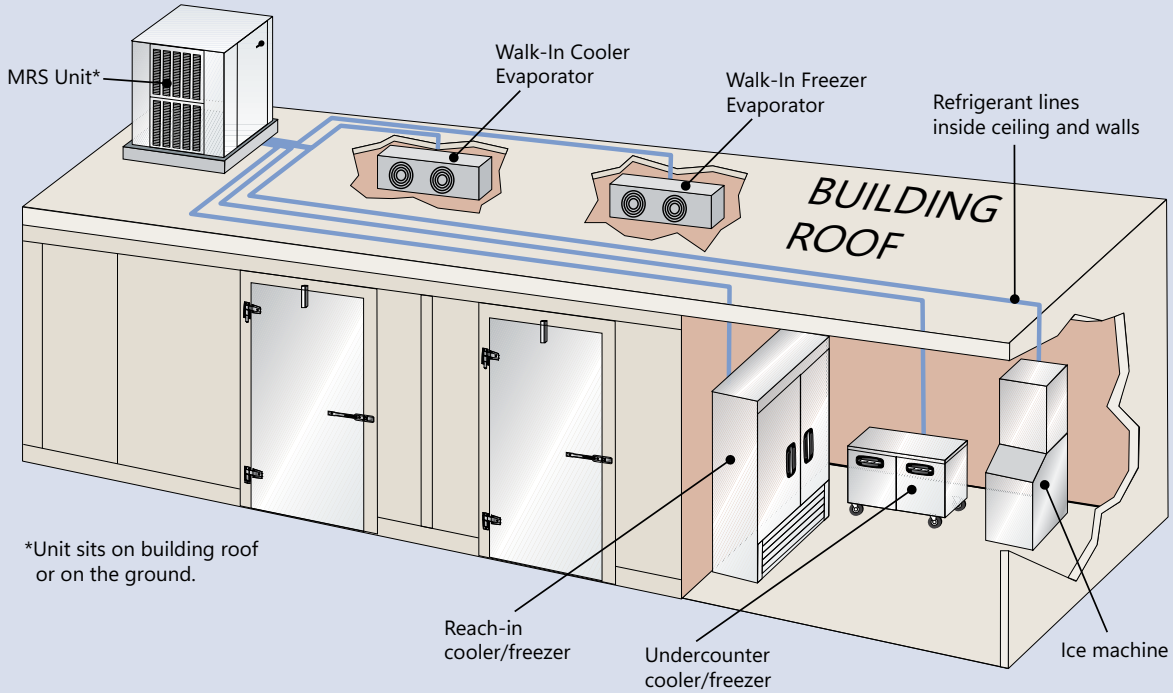

MRS MULTI-COMPRESSOR SYSTEM FEATURES

Shown in optional stainless steel finish (a galvanized housing is standard).

Refrigeration Modules

set the MRS series apart. Each system is composed of individual modules containing compressors and other components piped to a condenser. This modularity maximizes configuration flexibility, simplifies service and provides for future expandability.

Modules can be configured individually as medium or low temp. Compressors are available as hermetic or scroll.

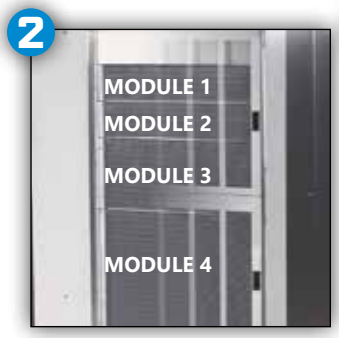

Modular Condenser Coils

give each refrigeration module its own section, allowing replacements without shutting down the full system.

A Pre-Wired Electrical Panel

with one-point connection allows simple, cost-effective installation and service.

A Pitch Pocket

inside each MRS unit seals the single roof penetration point and decreases leaks.

Head Pressure Controls,

standard on all MRS systems, provide protection in low ambient conditions. Modules also come with crankcase heaters for further protection.

LOGITEMP® ELECTRONIC CONTROLLER SYSTEMS

LogiTemp is an electronic controller system designed to increase food safety while reducing energy and installation costs. It is standard on all MRS modules.

Food Safety

- More precise and reliable controls than an all-mechanical system for increased food safety
- Should there be an issue with the refrigeration system, operators will know instantly through error codes and data provided online

Installation Savings

- No wiring is required between evaporator coils and condensing units (2 pairs of low voltage wires, typically thermostat cables, are required to operate the Reverse Cycle Defrost valve and the compressor relay at the condensing unit).
- A cat5 cable is recommended for communication between the high and low pressure sides
- Less refrigerant with no winter charge necessary

Energy Savings

- Proprietary design saves up to 27% more energy than an all-mechanical system
- Demand Defrost technology initiates defrosts only as needed for further energy savings
- Defrost time, when initiated, is also greatly shortened
- Reverse Cycle Defrost option provides additional savings (see sidebar below)
- Save 2-4% more energy with the fan cycle option which saves electricity by cycling the evaporator fans during the compressor's off cycle

Connectivity

- Software allows remote monitoring and programming using any device with a wireless internet or cabled (cat 5) connection
- No need for a service tech to climb onto a roof or enter the walk-in to adjust refrigeration systems
- Constant data access allows users to improve refrigeration performance and avoid service issues

LogiTemp® With Reverse Cycle Defrost Option

As an option on all systems, the LogiTemp Plus controller adds a reverse cycle defrost valve which offers several advantages:

- Helps prevent food spoilage by completely and rapidly removing ice build-up in evaporator coils.
- Reduces defrost energy usage by up to 80% over traditional electric heaters.
- The average defrost time for a freezer with electric heaters is 20 to 30 minutes. Reverse cycle can perform a defrost in as little as 3 to 5 minutes in a freezer or 1-1/2 to 2 minutes in a cooler. Shorter defrost times help protect food integrity.
- Adds refrigerant savings due to reduced charge.

Software gives users constant access to refrigeration system performance data and can be accessed from any device with an internet connection, including PC, Mac, smartphone or tablet.

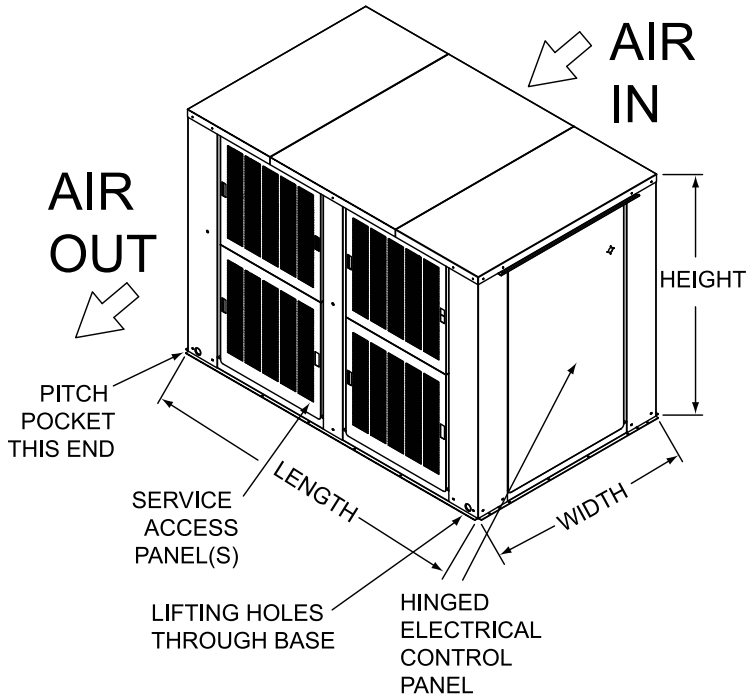

5 FT. MINIMUM CLEARANCE REQUIRED ON ALL SIDES

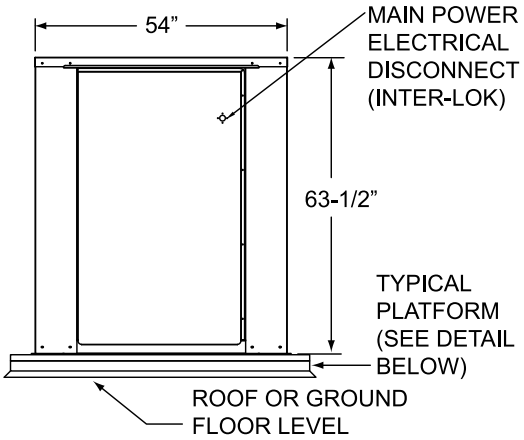

ELEVATION DETAIL (TYPICAL)

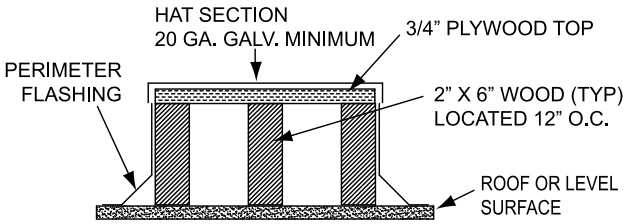

PLATFORM DETAIL (TYPICAL)
GENERAL CONTRACTOR TO SUPPLY

NOTES:
- General contractor to provide leveled platform to local code height
- Provide sheet metal cap as shown (hat section) with water tight soldered joints where applicable
- Provide pitch pocket in the platform with 1" high collar to prevent water ingress through roof
- Back fill opening with hot pitch or tar after completion of electrical and refrigeration piping

MASTER-BILT® Refrigeration Solutions
908 Hwy 15 South • New Albany, MS 38652
800-647-1284 • www.master-bilt.com

RSG Refrigerated Solutions Group®

003011 Rev. E All specifications within this publication subject to change without notice. ©2025 Master-Bilt Products, LLC. All rights reserved.