RR - SERIES

Range

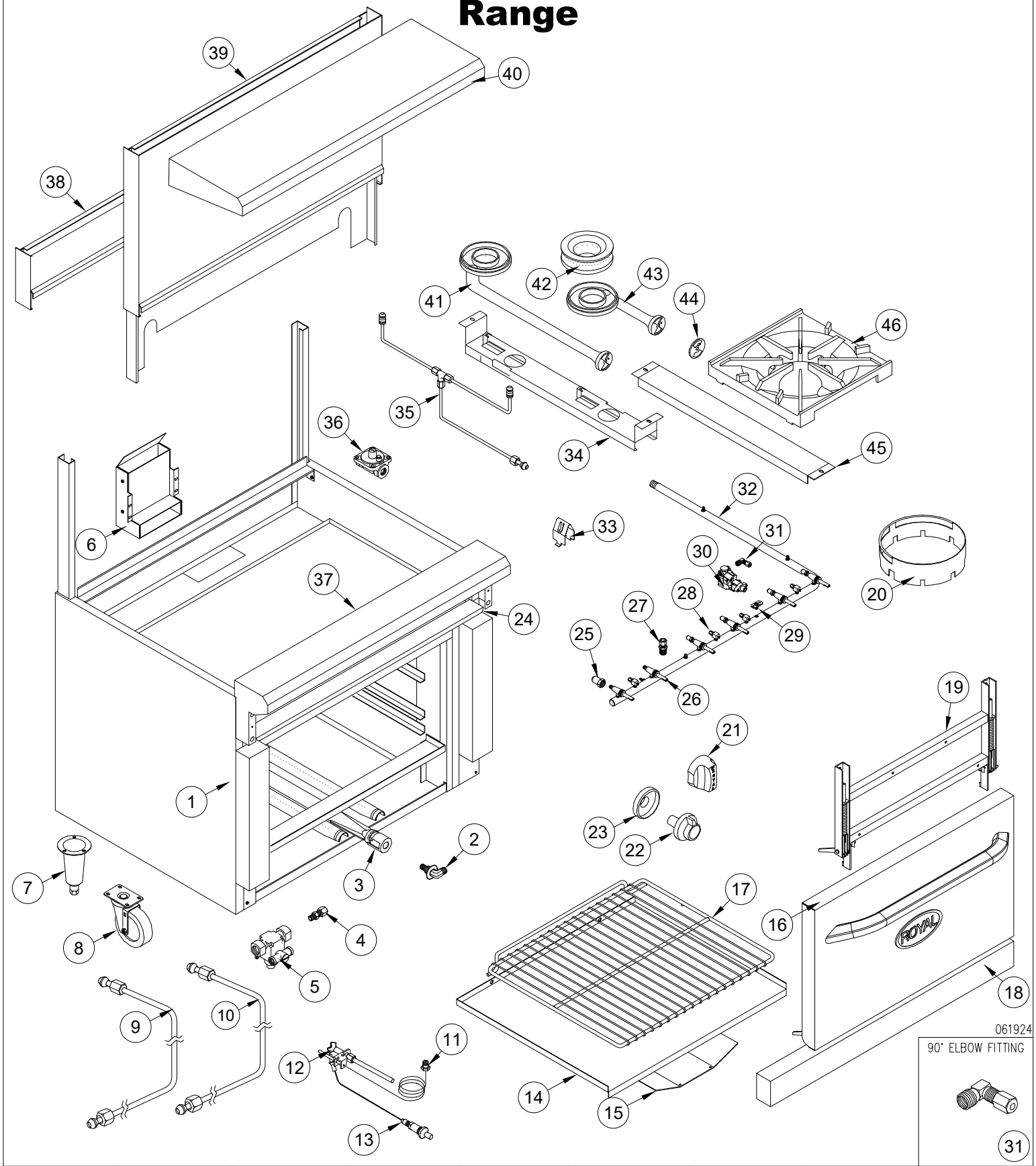

ORIFICE ELBOW	STRAIGHT FITTING	PILOT (OVEN)	IGNITOR (OVEN)	ORIFICE HOOD	GAS VALVE	90° PILOT VALVE	"T" FLANGE	B.J. THERMOSTAT
2	4	12	13	25	26	28	29	30

RR SERIES - RANGE		
ITEM NO.	PART NO.	DESCRIPTION
1	26426	Left Side Panel
	26425	Right Side Panel
2	1528	Bulkhead elbow, 1/4" MNPT X 3/8"-27
3	2610	“U” burner (oven)
4	1509	1/4” NPT x 3/8” CC Straight fitting (brass)
5	2174	Oven safety valve with inverted flare nut and ferrule
6	30113	Flue box assembly.
7	1219	Chrome cone legs
8	2193	Caster 5” w/brake
	2192	Caster 5” without brake
9	1004-**	3/16” Flex tubing kit (**Specify length of tubing) (T'stat to safety)
		24"/36"/48"/60"/72" griddle on RH = 53"
		24"/36"/48"/60"/72" griddle on LH = 75"
10	1003-**	3/8” Flex tubing kit (**Specify length of tubing) (manifold to safety)
		Units: 24"/36"/48"/60"/72" griddle on RH = 53"
		Units: 24"/36"/48"/60"/72" griddle on LH = 75"
11	2175	Thermocouple
12	2209	Oven Pilot – natural gas
	2210	Oven Pilot – propane gas
13	2173	Manual spark igniter w/red push button
14	30010	24” Oven bottom
	30041	36” Oven bottom
15	30036	Oven flame spreader (26 ½” oven)
	30005	Oven flame spreader (20” oven)
16	30132	24” Oven door (complete)
	30159	36” Oven door (complete)
17	4322	20” Oven rack
	3210	26” Oven rack
18	30009	24” Kick plate
	30045	36” Kick plate
19	30013	Door frame assy. (20” oven)
	30043	Door frame assy. (26 ½” oven)
20	30402	Wok ring adaptor
21	3095	Royal knob, black filled
22	2167	Thermostat dial (black) – Oven only
23	2169	Thermostat bezel (chrome)
24	30008	24” Crumb tray
	30039	36” Crumb tray
25	1121-42	Orifice hood # 42 For 20" oven burner natural gas.
	1122-53	Orifice hood # 53 For 20" oven burner propane gas.
	1121-36	Orifice hood # 36 For 26" Oven burner natural gas
	1122-50	Orifice hood # 50 For 26" Oven burner propane gas
	1121-39	Orifice hood # 39 Lift off burner natural gas.
	1122-52	Orifice hood # 52 Lift off burner propane gas.
26	1628	Gas valve (brass) w/out orifice
27	1002	1/8” NPT X 3/16” CC Brass Fitting
28	1120	1/8" NPT x 3/16" CC 90º Adjustable single pilot valve (brass)
29	1525	B.J. Thermostat flange
30	2168	B.J. Thermostat (oven only)

RR SERIES - RANGE		
ITEM NO.	PART NO.	DESCRIPTION
31	1507	1/4" MNPT X 3/8" CC ELBOW
32	3810	24” Manifold pipe
	3811	36” Manifold pipe
	3812	48” Manifold pipe
	3813	60” Manifold pipe
	3814	72” Manifold pipe
33	1001	Thermostat bulb clip
34	30087	Burner hanger – Lift off burner
	30494	Delux burner hanger S.S. – Lift off burner
35	4592	Pilot tubing assembly (double burner)
36	1618	Gas pressure regulator (nat. gas)
	1619	Gas pressure regulator (propane Gas)
37	30124	24” Landing Ledge
	30145	36” Landing Ledge
	30166	48” Landing Ledge
	30187	60” Landing Ledge
	30208	72” Landing Ledge
38	30133	24” Stub back assembly
	30141	36” Stub back assembly
	30177	48” Stub back assembly
	30201	60” Stub back assembly
	30215	72” Stub back assembly
39	34025	24” High front & high back assembly
	34026	36” High front & high back assembly
	34027	48” High front & high back assembly
	34028	60” High front & high back assembly
	34029	72” High front & high back assembly
40	30131	24” Shelf
	30148	36” Shelf
	30169	48” Shelf
	30190	60” Shelf
	30211	72” Shelf
41	1712	18" Rear venturi.
42	1710	Burner head removable
43	1711	6" Front venturi.
44	1108	Air shutter (mixer)
45	29556	Top grate support.
	30495	Delux top grate support. S.S.
46	1100	12" x 12" Top grate (cast iron)

RR - SERIES (Cont.)

Range Griddle, Radiant broiler, Raised Griddle

RANGE GRIDDLE

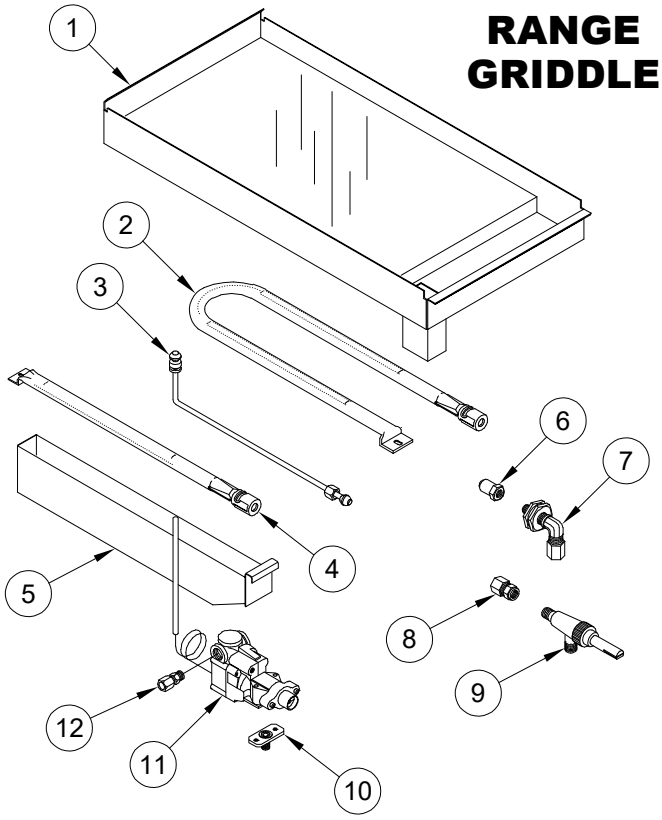

RANGE RADIANT BROILER

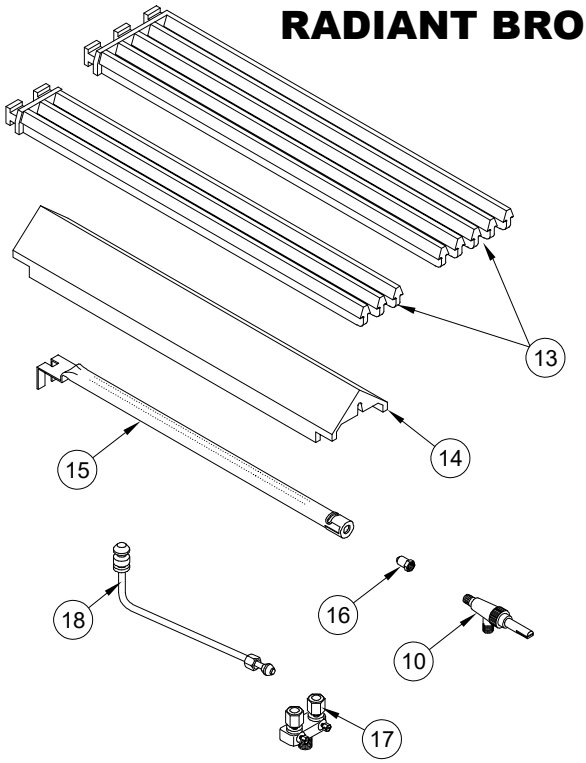

RANGE RAISED GRIDDLE

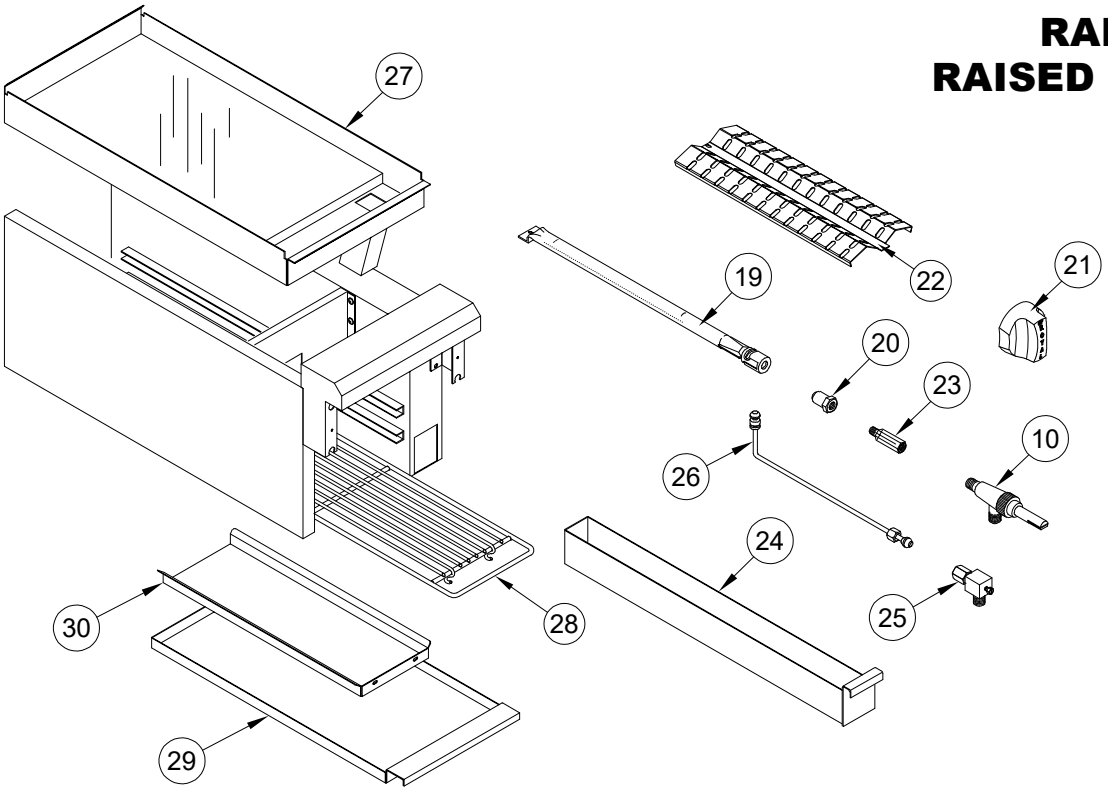

061924

ORIFICE HOOD	ORIFICE ELBOW	GAS VALVE ADAPTER	GAS VALVE	B.J. THERMOSTAT	DUAL PILOT VALVE	GAS VALVE KNOB	ORIFICE ADAPTER	90° PILOT VALVE
		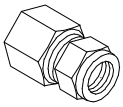	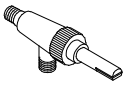		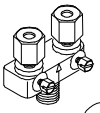	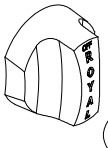		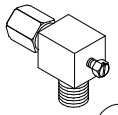
6 16 20	7	8	9	11	17	21	23	25

RR SERIES - RANGE		
ITEM NO.	**PART NO.**	**DESCRIPTION**
RANGE GRIDDLE		
1	30411	12” Griddle plate assy. (Left)
	30427	12” Griddle plate assy. (Right)
	30412	24” Griddle plate assy. (Left)
	30428	24” Griddle plate assy. (Right)
	30413	36” Griddle plate assy. (Left)
	30429	36” Griddle plate assy. (Right)
	30451	48” Griddle plate assy. (Left)
	30454	48” Griddle plate assy. (Right)
2	2214	“U” burner (range griddle only)
3	2208	Pilot tip and tube assembly, range griddle RH: 10.25" length
		Pilot tip and tube assembly, range griddle LH: 9.25" length
4	2211	Straight burner
5	30406	Grease can assy.
6	1121-46	Orifice hood (griddle) #46 (brass) natural gas.
	1122-55	Orifice hood (griddle) #55 (brass) propane gas.
7	1508	Orifice elbow 3/8 CC x 3/8-27 (brass)
8	1627	Adapter 3/8-27 x 3/8" CC (gas valve)
9	1628	Gas valve (brass) w/out orifice
10	1525	Thermostat flange nipple
11	1520	B.J. Thermostat (griddle)
12	1509	1/4 NPT x 3/8 CC Straight fitting
RADIANT BROILER		
13	1900	3" x 21" Top Grate (Cast Iron)
	6504	5" x 23" Top Grate (Cast Iron) For H/D Series
14	1902	Burner radiant (cast iron)
15	1904	Stainless steel burner w/ air shutter
16	1121-50	Orifice hood (RB) #50 (brass) natural gas
	1122-56	Orifice hood (RB) #56 (brass) propane gas
17	1211	1/8" NPT x 3/16" CC Adjustable double pilot valve (brass)
18	1937	Pilot tip assembly. Tube length 13"
RAISED GRIDDLE		
19	2211	Straight burner
20	1121-50	Orifice hood (RG) #50 (brass) natural gas
	1122-56	Orifice hood (RG) #56 (brass) propane gas
21	3095	Royal knob, black filled
22	30280	Heat deflector
23	1509	3/8” Orifice extension fitting (brass)
24	30264	RRG Grease can assy.
25	1625	1/8" NPT x 3/16" CC 90º Adjustable single pilot valve (brass)
26	2207	Pilot tip and tube assembly, range raised griddle. Tube length 13"
27	30287	RRG-12” Griddle plate assy.
	30312	RRG-24” Griddle plate assy.
28	2324	RRG-12” Rack
	2325	RRG-24” Rack
29	30276	RRG-12” Crumb tray
	30296	RRG-24” Crumb tray
30	30275	RRG-12” Drip pan
	30295	RRG-24” Drip pan

RR - SERIES (Cont.)

RR-C - RANGE CONVECTION OVEN

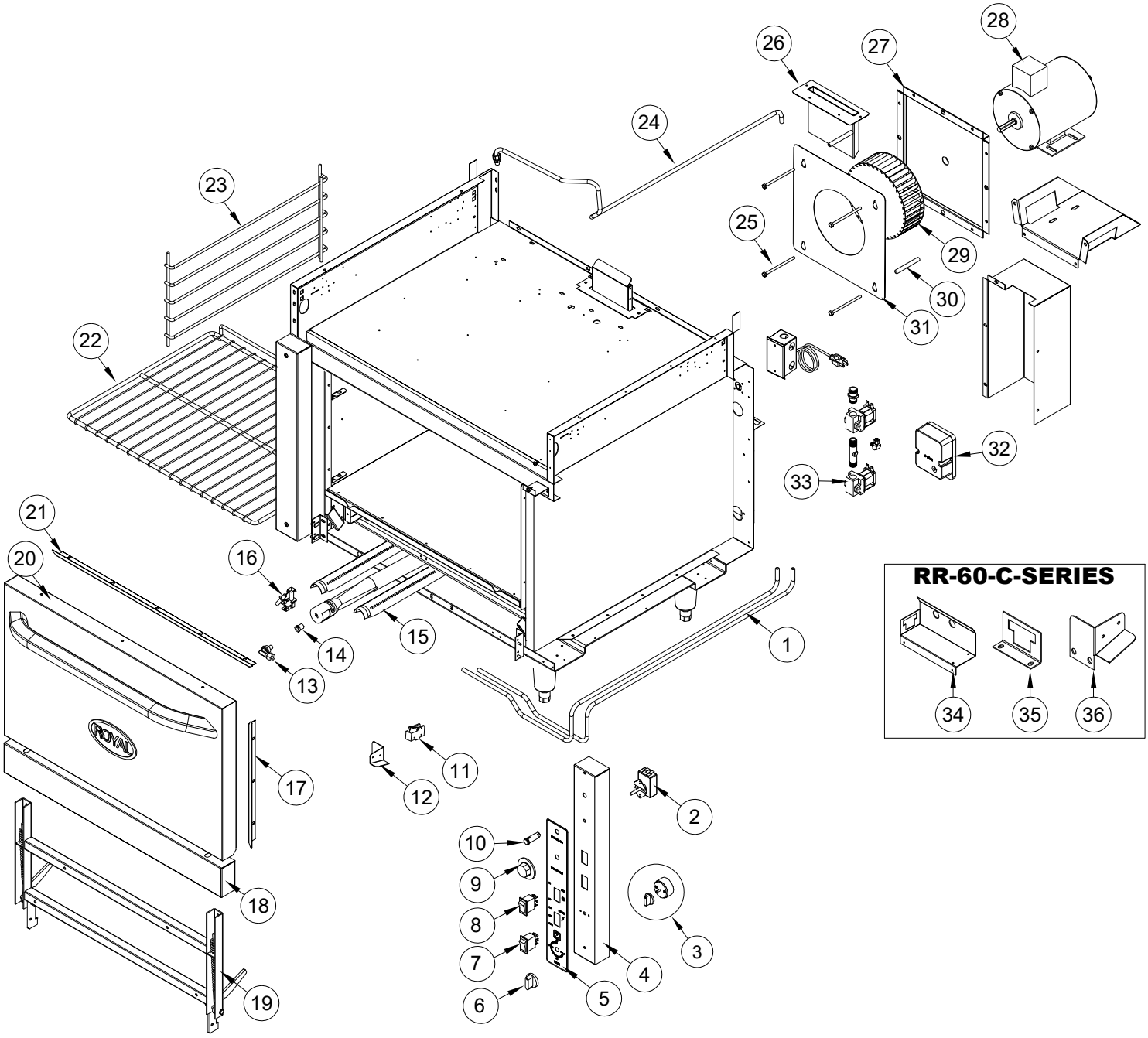

INDICATOR LIGHT	DOOR SWITCH	ORIFICE ELBOW	ORIFICE	PILOT
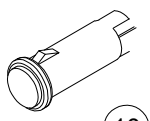 10	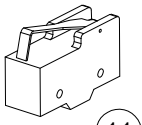 11	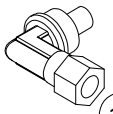 13	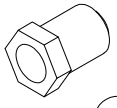 14	16

RR-C SERIES - RANGE CONVECTION OVEN		
ITEM NO.	PART NO.	DESCRIPTION
1	4560	Burner Flex Tubing 3/8" x 53"
	4563	Pilot Flex Tubing 3/16" x 75"
2	2520	Thermostat
3	2527	Manual timer & timer knob
4	30725	Control Panel R/H For 36” Range
5	2470	Control Panel Decal
6	3098	Timer knob
7	2526	Switch, Power—3 Position
8	2525	Switch, Oven Fan High/Low
9	2523	Thermostat Dial
10	2522	Indicator Light
11	2539	Switch, Oven Door
12	30734	Door Switch Bracket
13	1508	Orifice Elbow (3/8 CC X 3/8-27)
14	1121-39	Orifice Hood #39 (Brass) Natural Gas
	1122-52	Orifice Hood #52 (Brass) Propane Gas
15	2610	“U” Burner (Oven)
16	2209	Oven Pilot (Natural)
	2210	Oven Pilot (Propane)
17	30728	Door Seal Sides
18	30045	36” Kick Plate
19	30057	Convection Base Door Frame Assy.
20	30058	Convection Base Oven Door (Complete Assy.)
21	30727	Door Seals (Top—Bottom)
22	3210	26" Oven Rack
23	3200	Oven Rack Guide
24	4560	Manifold flex tubing to solenoid 3/8" x 53"
25	2507	Hex Head Bolt (1/4-20 X 4)
26	30772	Snorkel Tube Weld Assembly
27	30602	Motor Mount Weld Plate Assy.
28	2500	Motor
29	2503	Blower Wheel RR-C
30	2505	Blower Spacer Tube
31	30721	Blower Baffle
32	5853	RAM-4 Spark Module
33	2515	Solenoid Valve
34	30741	Solenoid Bracket
35	30757	Solenoid End Bracket
36	30775	Door Switch Bracket L/H for RR-60-C