EcoFry EQUIPMENT, LLC

Ventless Hop Air Fryer
Model: EFE35SPVB
MFR#: HOPULCLETL

The new ventless Hop Air Fryer oven fits anywhere and is easy for everyone to use every day.

Standard Features

- Ventless Operation
- Rotating Cooking Basket
- Stackable
- Self-Cleaning
- Single Phase
- Flat Tray Cook Option (Fragile Items)
- Programmable 100 menu Items
- Wi-Fi
- USB
- V-Dry System – Built in Condensation To Remove Moisture For Crispy Product

Standard Items Included

- Stainless Steel Rotating Cook Basket (EFE850342)
- Drip Plate (EFE100144)
- Crumbs Grid (EFE850372)
- Extractable Tray (EFE850370)
- Basket Extractor Handles (EFE850036)
- Carbon Filter (EFEGF1)

Optional Accessories

- Extractable Basket for Delicate Product (EFE850364)
- Stacking Kit (EFESK02)

Weight & Size

- 145lbs.
- 29” x 34” x 23” (W X D X H)
- 3.5lbs. Basket Capacity

Contact Us:
Visit: ecofryequipmentllc.com
Email: kraymond@ecofryequipment.com

EcoFry EQUIPMENT, LLC

Ventless Hop Air Fryer
Model: EFE35SPVB
MFR#: HOPULCLETL

Wash Cycles	
Water Pressure Minimum - Maximum	22-29psi
Rinse Water - 29psi	2 Gallons
Short Wash Cycle	6.6 Gallons
Long Wash Cycle	8.2 Gallons
Short Wash Detergent Usage	2-1/2 Ounces
Long Wash detergent Usage	5 Ounces
Short Wash Duration	44 minutes
Long Wash Duration	63 minutes
Rinse & Dry Duration	13 minutes
Rinse Only Duration	6 minutes

Power Requirements	208V-240V
Phase	Single
Amps	26
Breaker	35 Amp
KW	5.5
Plug	NEMA L6-30P
Receptacle	NEMA L6-30R
Clearences	4” L, R & Rear
Drain	1-1/8” Connection
Water Inlet	8mm OD Tubing

All connections must comply with federal, state and local codes.

Contact Us:
Visit: ecofryequipmentllc.com
Email: kraymond@ecofryequipment.com

EcoFry EQUIPMENT, LLC

Ventless Hop Air Fryer
Model: EFE35SPVB
MFR#: HOPULCLETL

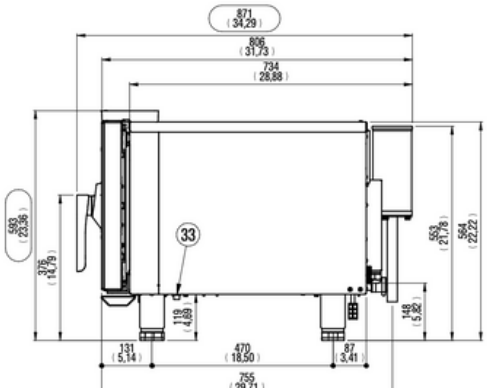

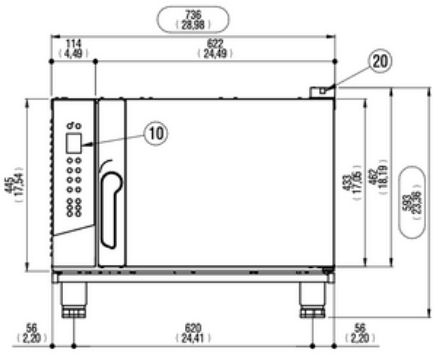

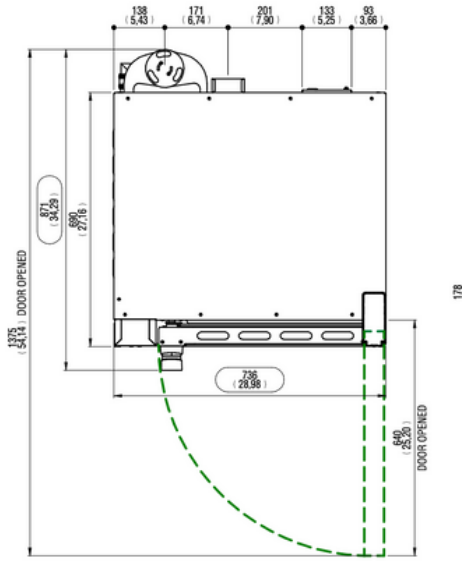

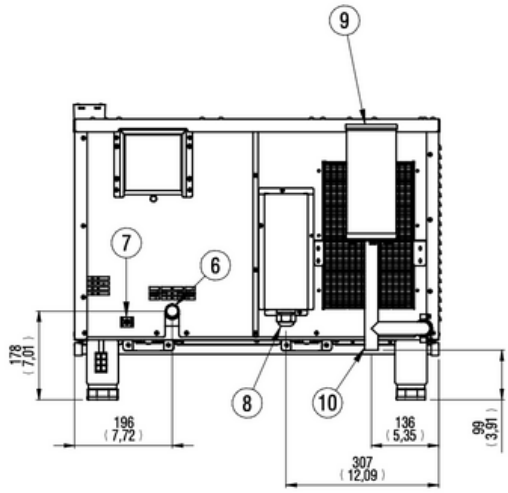

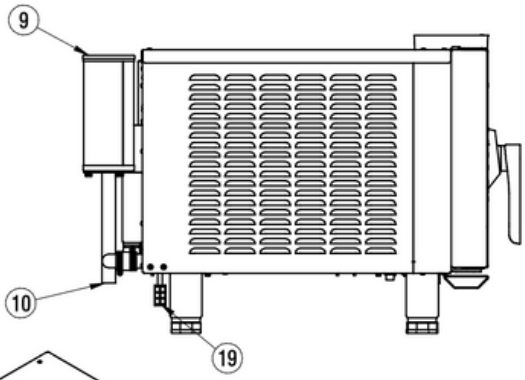

Part nr.	Description
6	HUMIDIFICATION & WASHING SOLENOID VALVE 3/4" BSP (GAS)
7	GROUND TERMINAL
8	COMPRESSION CABLE GLAND
9	HOT FUMES EXHAUST FILTERING SYSTEM
10	2,4" DIGITAL CONTROL
13	DRAIN PIPE Ø30mm
19	DEGREASING DETERGENT HOSE
20	USB PORT
33	SECURITY THERMOSTAT

EPA 202 Approved

NSF Certified to NSF/ANSI 60

UL EVALUATED
No. FE 00123456
This product has been evaluated in accordance with the procedures and limitations specified in the issued report

Contact Us:
Visit: ecofryequipmentllc.com
Email: kraymond@ecofryequipment.com