INSTALLATION & OPERATION MANUAL
FOR
STOCKPOT RANGE

MODEL: ISP18

MODEL: ISP182

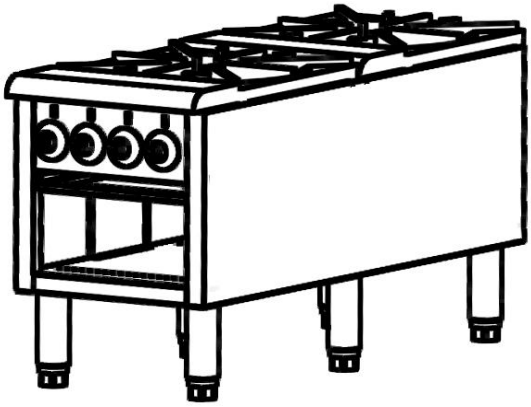

⚠ WARNING: IMPROPER INSTALLATION, ADJUSTMENT, ALTERATION, SERVICE OR MAINTENANCE CAN CAUSE PROPERTY DAMAGE, INJURY OR DEATH. READ THE INSTALLATION, OPERATING AND MAINTENANCE INSTRUCTIONS THOROUGHLY BEFORE INSTALLING OR SERVICING THIS EQUIPMENT.

3560 NW 56th Street
Fort Lauderdale, FL 33309
Tel.: 786.600.4687 / Toll Free: 844.218.8477
Fax.: 786.661.4100

5659 Royalmount Avenue
Montreal, Qc, Canada H4P 2P9
Tel.: 514.737.9701 / Toll Free: 888.275.4538
Fax.: 514.342.3854 / Toll Free: 877.453.8832

IMPORTANT FOR YOUR SAFETY

THIS MANUAL HAS BEEN PREPARED FOR PERSONNEL QUALIFIED TO INSTALL GAS EQUIPMENT, WHO SHOULD PERFORM THE INITIAL FIELD START-UP AND ADJUSTMENTS OF THE EQUIPMENT COVERED BY THIS MANUAL.

POST IN A PROMINENT LOCATION THE INSTRUCTIONS TO BE FOLLOWED IN THE EVENT THE SMELL OF GAS IS DETECTED. THIS INFORMATION CAN BE OBTAINED FROM THE LOCAL GAS SUPPLIER.

IMPORTANT

IN THE EVENT A GAS ODOR IS DETECTED, SHUT DOWN UNITS AT MAIN SHUTOFF VALVE AND CONTACT THE LOCAL GAS COMPANY OR GAS SUPPLIER FOR SERVICE.

FOR YOUR SAFETY

DO NOT STORE OR USE GASOLINE OR OTHER FLAMMABLE VAPORS OR LIQUIDS IN THE VICINITY OF THIS OR ANY OTHER APPLIANCE.

⚠ WARNING **Improper installation, adjustment, alteration, service or maintenance can cause property damage, injury, or death. Read the installation, operating and maintenance instructions thoroughly before installing or servicing this equipment.**

IN THE EVENT OF A POWER FAILURE, DO NOT ATTEMPT TO OPERATE THIS DEVICE.

INSTALLATION, OPERATION AND CARE OF STOCKPOT RANGE

GENERAL

Stockpot ranges are designed for commercial use only and feature fast, efficient gas heat. Each burner is controlled by an adjustable gas valve. Heavy-duty, cast iron top grate(s) are easily removed for cleaning when cool. A grease drawer is provided to collect fat run-off; it opens to the front for inspection or drain-off.

Model No.	# of Burners	BTU	Orifice size		Regulator pressure	
			Nat.	LP	Nat.	LP
Single stock pot	2	80,000	#32(ϕ3.0mm)	#47(ϕ2.0mm)	5”	10”
Dual stock pot	4	160,000				

THIS APPLIANCE IS EQUIPPED FOR NATURAL GAS.
For Natural gas when equipped with No. #32 (ϕ3.0mm) drill size orifice.
For LP gas when equipped with No.#47 (ϕ2.0mm) drill size orifice.
For conversion to LP gas see instruction plate on the appliance, see Page 10.

INSTALLATION

UNPACKING

This stockpot was inspected before leaving the factory. The carrier assumes full responsibility for the safe delivery upon acceptance of the shipment. Check for possible shipping damage immediately after receipt.

If the stockpot is found to be damaged, complete the following steps:

1. Carrier must be notified within 5 business days of receipt.
2. Carrier’s local terminal must be notified immediately upon discovery (note time, date, and who was spoken to), and follow up and confirm with written or electronic communication.
3. All original packing materials must be kept for inspection purposes.
4. The stockpot cannot have been moved, installed, or modified.

Remove all packing material and protective plastic from the surfaces of the unit.
Before installing, verify that the type of gas (natural or propane) and the clearance dimensions agree with the specifications on the rating plate which is located at the back of the stockpot.

LOCATION

The installation location must be kept free and clear of combustibles. Do not obstruct the flow of combustion and ventilation air. DO NOT install the stockpot adjacent to open burners or fryers.

Sufficient air should be allowed to enter the room to compensate for the amount of air removed by any ventilating system and for combustion of the gas burners. Do not obstruct the air flow into and around the appliance. Do not obstruct the flow of flue gases through and above the stockpot top grate. Position the stockpot in its final location. Check that there are sufficient clearances to service the stockpot and to make the required gas supply connection(s). Provide 24" clearance at the front for cleaning, maintenance, service and proper operation.

Minimum Clearance	Combustible Construction	Non-Combustible Construction
Rear	24”	4”
Sides	18”	0”

INSTALLATION CODES AND STANDARDS

The Stockpot Range must be installed in accordance with:

In the United States of America:

1. State and local codes.
2. National Fuel Gas Code, ANSI-Z223.1/NFPA #54 (latest edition). This shall include but not be limited to: NFPA #54 Section 10.3.5.2 for Venting. Copies may be obtained from The American Gas Association Accredited Standards Committee Z223, @ 400 N. Capital St. NW, Washington, DC 20001 or the Secretary Standards Council, NFPA, 1 Batterymarch Park Quincy, MA 02169-7471

   NOTE: In the Commonwealth of Massachusetts

   All gas appliances vented through a ventilation hood or exhaust system equipped with a damper or with a power means of exhaust shall comply with 248 CMR.
3. NFPA Standard # 96 *Vapor Removal from Cooking Equipment*, latest edition, available from the National Fire Protection Association, Batterymarch Park, Quincy, MA 02269.

In Canada:

1. Local codes.
2. CAN/CSA-B149.1 Natural Gas Installation (latest edition)
3. CAN/CSA-B149.2 Propane Installation Code (latest edition), available from the Canadian Gas Association, 178 Rexdale Blvd., Etobicoke, Ontario, Canada M9W 1R3

LEG INSTALLATION

⚠ WARNING The stockpot range is shipped without the legs attached. The stockpot range must not be operated without the legs attached to the unit.

1. Remove cast iron grate and burners from chassis.
2. Turn chassis upside down and locate the leg plate to alight the four screw holes (Fig. 1).
3. Screw legs plate with four screws on the bottom until tight (Fig. 2). Use a pipe or strap wrench with a towel (so as not to scratch leg) if needed to firmly tighten legs.

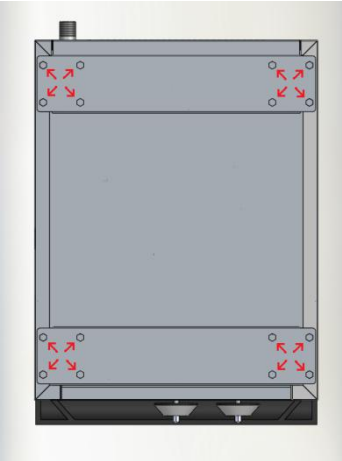

Fig. 1

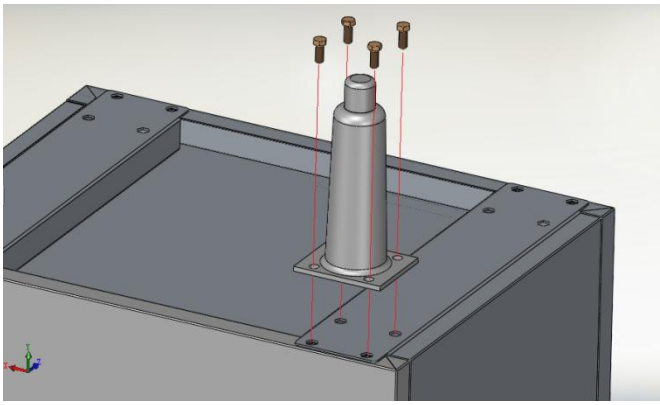

Fig. 2

4. Continue process until all legs are installed. Single stockpots will have four legs and double stockpots will have six legs.
5. Return stockpot to upright position; reinstall burners and grates.

LEG ORIENTATION

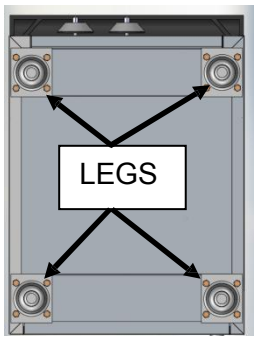

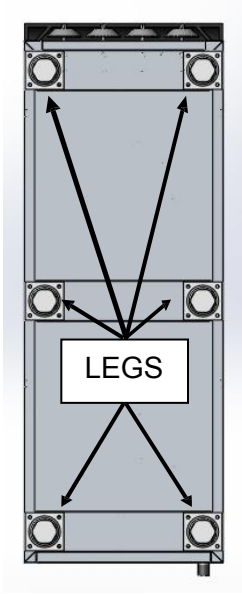

GAS PRESSURE REGULATOR INSTALLATION

Gas regulator pressure is preset at 5” Water Column (W.C.) for natural gas, and 10” W.C. for propane gas. Minor adjustments may be required based on site specific gas pressure.

Install the regulator as close to the stockpot on the gas supply line as possible. Make sure that the arrow on the underside of the regulator is oriented in the direction of gas flow to the stockpot (Fig. 3) and the regulator is positioned with the vent plug and adjustment screw upright (Fig. 4).

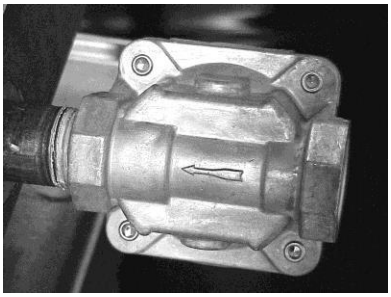

Fig. 3

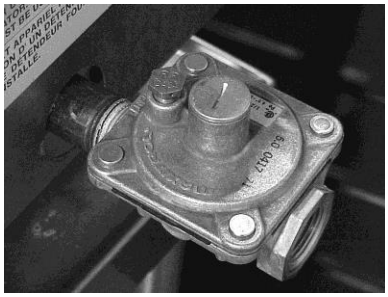

Fig. 4

The minimum supply pressure (upstream of the regulator) should be 7-9” W.C. for natural gas and 11-12” W.C. for propane gas. At no time should the hotplate be connected to supply pressure greater than ½ psig (3.45 kPa) or 14” W.C.

LEVELING

The Stockpot Range is equipped with legs. Turn the feet at the bottom of the legs in or out to level the Stockpot Range in the final installed location.

VENTILATION HOOD

The stockpot should be installed under a suitable ventilation hood. For safe operation and proper ventilation, keep the space between the stockpot and vent hood free from any obstructions.

GAS CONNECTION

The data plate on the rear of the stockpot indicates the type of gas your unit is equipped to burn. DO NOT connect to any other gas type.

NOTICE Gas supply connections and any pipe joint compound must be resistant to the action of propane gases.

Purge the supply line to clean out any dust, dirt, or any foreign matter before connecting the line to the unit.

Codes require that a gas shut-off valve be installed in the gas line ahead of the stockpot. The gas supply line must be at least the equivalent of ¾" iron pipe.

A pressure regulator is supplied and must be installed outside of the broiler when making the gas supply connection. Standard orifices are set for 5"WC (Water Column) for Natural Gas — 10"WC (Water Column) for Propane. Use the $^{1}/_{8}$" pipe tap on the burner manifold for checking pressure. Make sure the gas piping is clean and free of obstructions, dirt, and piping compound.

An adequate gas supply is necessary. Undersized or low pressure lines will restrict the volume of gas required for satisfactory performance. A minimum supply pressure of 7" W.C. for natural gas and 11" W.C. for propane gas is recommended. With all units operating simultaneously, the manifold pressure on all units should not show any appreciable drop.

When testing the gas supply piping system, if test pressures exceed ½ psig (3.45 kPa), the stockpot and its individual shutoff valve must be disconnected from the gas supply piping system. When test pressures are ½ psig (3.45 kPa) or less, the stockpot must be isolated from the gas supply piping system by closing its individual manual shut-off valve during any pressure testing of the system.

⚠ WARNING Prior to lighting, check all joints in the gas supply line for leaks. Use soap and water solution. Do not use an open flame.

OPERATION

⚠ WARNING The stockpot range and its parts are hot. Use care when operating, cleaning or servicing the stockpot range.

CONTROLS

The burner is in two sections, controlled by two heavy duty infinite control valves. The center "Star" section (Fig. 6) is on separate burner with an input of 40,000 BTU/hr. It is controlled by the right burner valve knob. The outer circle of the burner (Fig. 6) is the other separate 40,000 BTU/hr input burner, controlled by the left burner valve knob.

These two separate burners provide heat flexibility. With one burner off and the second burner set low, up to both burners full on, you can move from low simmer on up to 80,000 BTU/hr input.

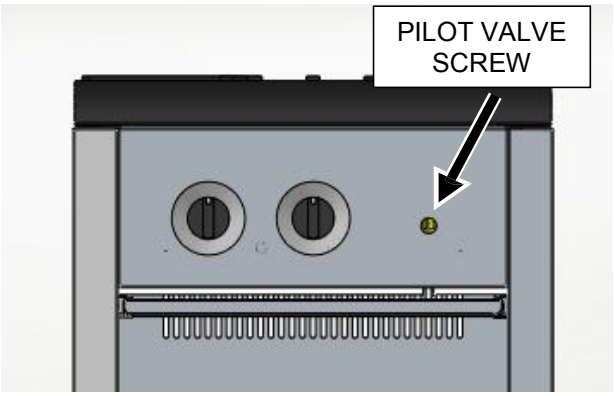

Fig. 5

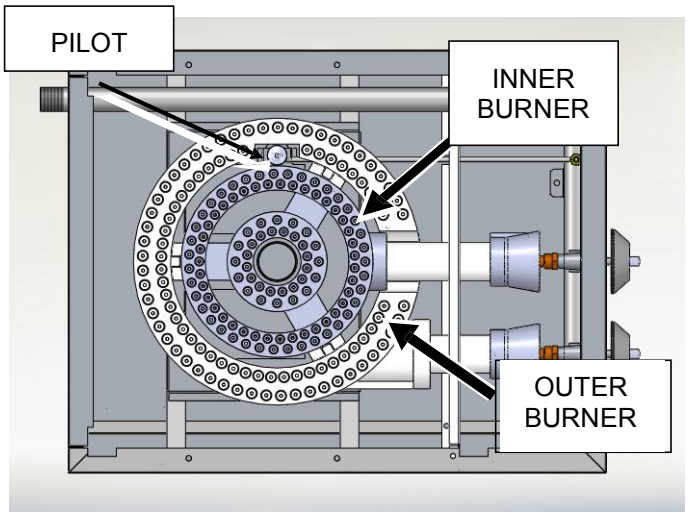

Fig. 6

LIGHTING INSTRUCTIONS

1. Turn all burner valves to OFF position and wait 5 minutes.
2. Turn gas shutoff valve ON.
3. Light standing pilot with a lit taper (see Fig 6). Adjust pilot to ¼" high flame, if necessary, by turning pilot valve adjusting screw (see Fig. 5) counterclockwise to increase or clockwise to decrease flame.
4. Turn burner valve to ON position.
5. If pilot does not light, turn main gas supply OFF and repeat steps 1 through 4.

TO COMPLETELY SHUTDOWN THE BURNERS AND PILOT LIGHTS

For complete shutdown: Turn the main gas supply valve OFF.

CLEANING

Top grate(s) may be immersed in strong commercial cleaning compound overnight. In the morning, rinse with hot water to remove any residues of cleaning compound. Thoroughly dry and apply a light coating of cooking oil to prevent rusting.

Stainless steel surfaces may be cleaned using damp cloth with mild detergent and water solution. Places where fat, grease, or food can accumulate must be cleaned regularly.

The grease drawer should be emptied regularly when cool.

MAINTENANCE

WARNING The stockpot range and its parts are hot. Use care when operating, cleaning or servicing the stockpot range.

LUBRICATION

All valves must be checked and lubricated periodically. At the first sign of sticking, valves should be lubricated by a trained technician using high temperature grease. Check with your service agency for details.

SERVICE AND PARTS INFORMATION

Contact the Service Contractor in your area to obtain service and parts information. For a complete listing of Service and Parts depots refer to **http://www.blueairinc.com/**.

When calling for service the following information should be available from the appliance serial plate: Model Number, Serial Number and Gas Type. The appliance serial plate is located on the back panel.

TROUBLESHOOTING

PROBLEM	POSSIBLE CAUSES
Pilot Outage	1. Pilot flame too low 2. Restriction in pilot orifice 3. Restriction in pilot valve
Improper burner combustion	1. Improper ventilation
Poor Ignition	1. Insufficient gas input 2. Poor air-gas adjustment 3. Restriction in pilot orifice 4. Restriction in main burner ignition port 5. Restriction in control valve 6. Restriction in gas orifice

Conversion to LP gas orifice

1. Take out the grate on the top. You can see the orifice is on front of the burner as below Fig.7 show.

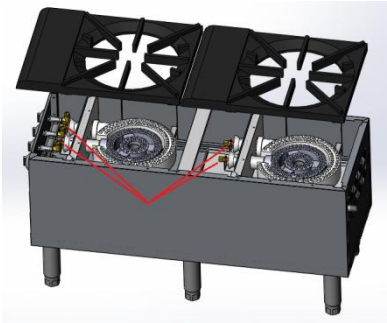

Fig. 7

2. As **Fig. 8** show, screw out the Nat. gas orifice[#32(ϕ3.0mm)] counter-clockwise, then screw in the LP gas orifice[#43(ϕ2.3mm)] clockwise.

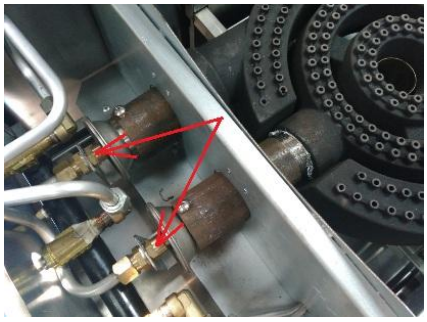

Fig. 8

3. Change the pressure regulator spring kit to LP gas model, set at 10" W.C. (Water Column).

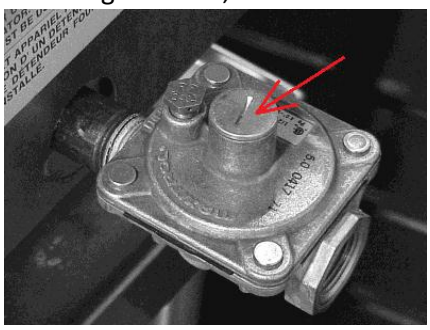

Fig. 9

4. Turn pilot adjustment screw clockwise, then light standing pilot and adjust flame 1/4" high..

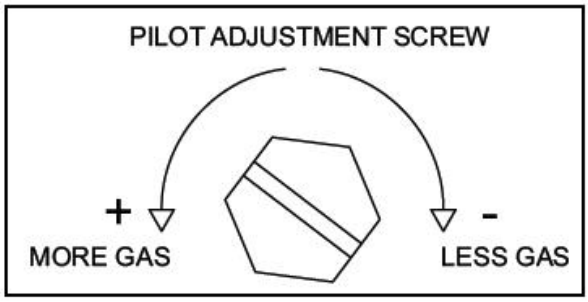

Fig. 10

IKON

A product with the IKON name incorporates the best in durability and low maintenance. We all recognize, however, that replacement parts and occasional professional service may be necessary to extend the useful life of this unit. When service is needed, contact a IKON Authorized Service Agency, or your dealer. To avoid confusion, always refer to the model number, serial number, and type of your unit.

Limited Warranty

IKON warrants to the original purchaser of new equipment that said equipment, when installed in accordance with our instructions within North America and subjected to normal use, is free from defects in material or workmanship for a period of 1 year. The labor warranty is one year from original installation
or 18 months from actual factory shipment date whichever date occurs first. Warranty includes onsite service
calls within 60 miles of an authorized service company. End user is responsible for all extra travel and mileage at prevailing rates.
THIS WARRANTY IS IN LIEU OF ALL OTHER WARRANTIES, WHETHER EXPRESSED OR IMPLIED. IKON EXPRESSLY DISCLAIMS ANY IMPLIED WARRANTY OF MERCHANTABILITY OR EXPRESSED OR IMPLIED WARRANTY OF FITNESS FOR A PARTICULAR PURPOSE.
IKON 'S OBLIGATION AND LIABILITY UNDER THIS WARRANTY IS EXPRESSLY LIMITED TO REPAIRING AND REPLACING EQUIPMENT WHICH PROVES TO BE DEFECTIVE IN MATERIAL OR WORKMANSHIP WITHIN THE APPLICABLE WARRANTY PERIOD. All repairs pursuant to this Warranty will be performed by an Authorized Designated IKON Service Location during normal working hours. This warranty does not cover services performed at overtime or premium labor rates. End user is responsible for the difference between normal service rates and premium service rates. IN NO EVENT SHALL IKON BE LIABLE FOR INCIDENTAL OR CONSEQUENTIAL DAMAGES TO BUYER OR ANY THIRD PARTY, INCLUDING, WITHOUT LIMITATION, LOSS OF PROPERTY, PERSONAL INJURY, LOSS OF BUSINESS OR PROFITS OR OTHER ECONOMIC LOSSES, OR STATUTORY OR EXEMPLARY DAMAGES, WHETHER IN NEGLIGENCE, WARRANTY, STRICT LIABILITY, OR OTHERWISE.
This warranty is given only to the first purchaser from a retail dealer. No warranty is given to subsequent transferees.
Warranty does not cover product failures caused by: failure to maintain, neglect, abuse, damage due to excess water, fire, normal wear, improper set up and use. Periodic maintenance is not covered.
This warranty is not in force until such time as a properly completed and signed installation/warranty registration or
an online registration form has been received by IKON within 30 days from the date of installation.
Proof of purchase is required to extend warranty more than 1 year from date of shipment from the factory.

THE FOREGOING WARRANTY PROVISIONS ARE A COMPLETE AND EXCLUSIVE STATEMENT BETWEEN THE BUYER AND SELLER. IKON NEITHER ASSUMES NOR AUTHORIZES ANY PERSONS TO ASSUME FOR IT ANY OTHER OBLIGATION OR LIABILITY IN CONNECTION WITH SAID EQUIPMENT.

Example of items not covered under warranty, but not limited to just these items:

1 Acts of God, fire, water damage, burglary, accident, theft.
2 Freight damage.
3 Improper installation or alteration of equipment.
4 Use of generic or after-market parts.
5 Repairs made by anyone other than a IKON designated servicer.
6 Lubrication.
7 Expendable wear parts, adjustable feet, blown fuses, lamps, etc.
8 Cleaning of equipment.
9 Misuse or abuse.