Scotsman®
Ice Systems

Service Manual for models UC2024 and UC2724

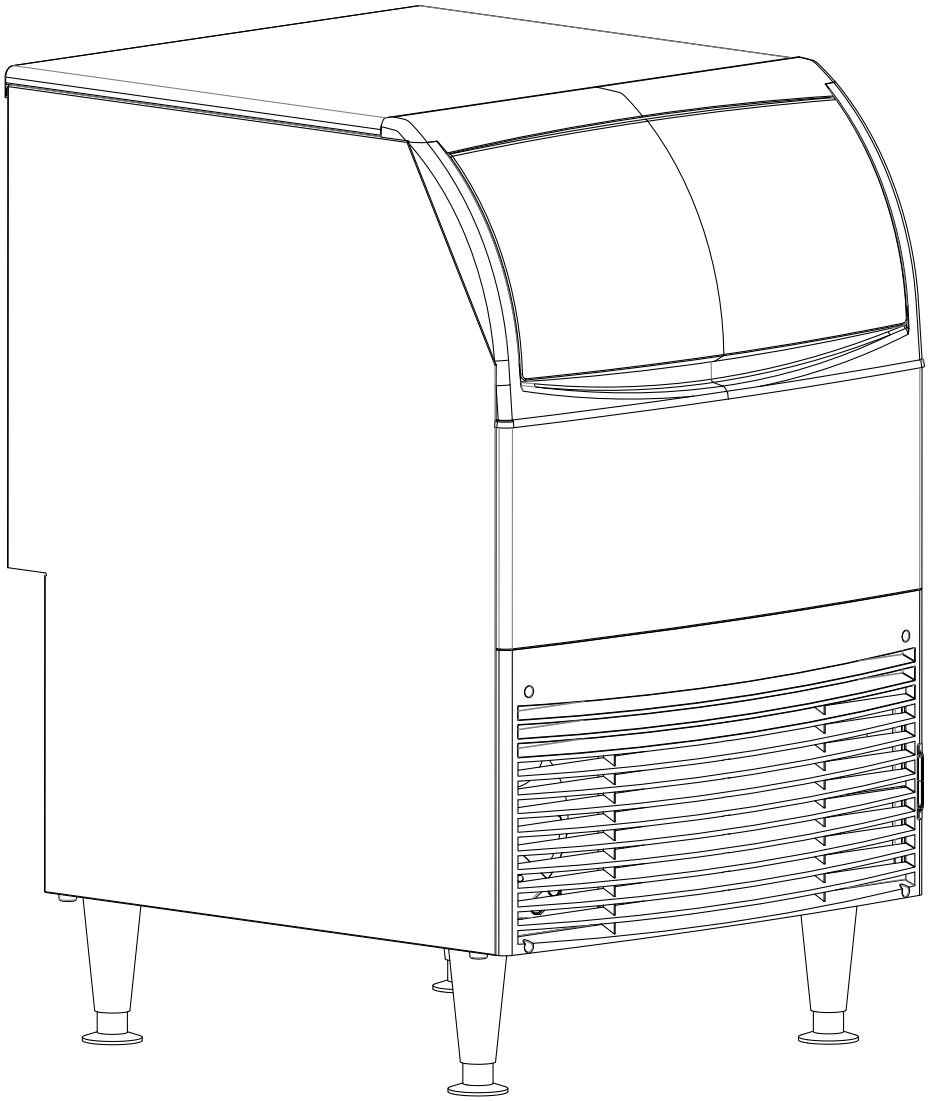

Introduction

To the owner or user: this manual is intended to provide you and the maintenance or service technician with the information needed to install, startup, clean, maintain and repair this product. Observe any caution or warning notices. They are important and provide notice of potential hazards.

Keep this manual for future reference.

If additional technical information is needed, go to Scotsman's website, www.scotsman-ice.com.

Note: This is a commercial product. If service is needed on a unit in a residence, warranty may be limited. Use a commercial service company. Locate one from the Scotsman website: www.Scotsman-ice.com

Scotsman Ice Systems are designed and manufactured with the highest regard for safety and performance. They meet or exceed UL563, verified by a nationally recognized safety authority such as UL or ETL.

Table of Contents

Specifications . . . . . Page 3
Cabinet Drawing . . . . . Page 4
Plan and Front Views . . . . . Page 5
Side and Back Views . . . . . Page 6
Placement . . . . . Page 7
Installation . . . . . Page 8
Initial Start Up . . . . . Page 9
Use and Operation . . . . . Page 10
Ice Bridge Thickness Adjustment . . . . . Page 11
Indicator Light Reference . . . . . Page 12
Maintenance and Cleaning . . . . . Page 13
Condensers and Air Filter Cleaning. . . . . Page 15
The Systems . . . . . Page 16
Selected Water Components. . . . . Page 17
Selected Electrical Components . . . . . Page 18
Selected Refrigeration Components . . . . Page 19
Controller. . . . . Page 20
Ice Sensing Plate and Switch . . . . . Page 21
Test Mode . . . . . Page 22
Thermistor Values . . . . . Page 23
Timed Cycles. . . . . Page 24
Freeze Setpoints . . . . . Page 25
Technical Information on UC2024 . . . . . Page 26
Technical Information on UC2724 . . . . . Page 27
Service Diagnosis . . . . . Page 28
Removal and Replacement. . . . . Page 30
Removal and Replacement. . . . . Page 31
Removal and Replacement. . . . . Page 32
Condenser Fan Motor . . . . . Page 33
Thermistors . . . . . Page 34
Flap or Curtain Switch. . . . . Page 35
Hot Gas Valve and TXV. . . . . Page 36
Evaporator. . . . . Page 37
Quick Reference . . . . . Page 38
Wiring Diagram UC2024 . . . . . Page 39
Wiring Diagram UC2724 . . . . . Page 40
Wiring Routing. . . . . Page 42

WARNING

CAUTION

Observe the Caution and Warning notices. They are indicators of important safety information. Keep this manual for future reference.

WARNING: Cancer and Reproductive Harm
www.P65Warnings.ca.gov

Specifications

This ice maker is designed to be installed indoors, in a controlled environment. Although it can operate in a wide range of air and water temperatures, it will provide the best performance if not subject to extremes.

Air Temperature Limitations

- Maximum: 100° F or 38° C
- Minimum: 50° F or 10° C

Water Temperature Limitations

- Maximum: 100° F or 38° C
- Minimum: 40° F or 4.4° C

Water Pressure, Potable

- Maximum: 80 PSI or 5.5 BAR
- Minimum: 20 PSI or 1.3 BAR

Water Pressure, Condenser inlet

- Maximum: 145 PSI or 10 BAR
- Minimum: 20 PSI or 1.3 BAR; can be as low as 5 PSI or 0.3 BAR if clean and supplied with 45° F water.

Potable Water Inlet Flow Rate

- 1.25 GPM or 4.7 LPM

Water Cooled Condenser GPM

- 70°F or 21°C water: .25 GPM or .95 LPM
- 50° F or 10°C water: .11 GPM or .41 LPM

Voltage 115 volt models

- Maximum 126 VAC
- Minimum 104 VAC

Operating the machine outside of any of the above limitations is considered abuse and any resulting damage is not covered by warranty and could cause a complete loss of warranty coverage.

Warranty Information

The warranty statement for this product is provided separately from this manual. Refer to it for applicable coverage.

In general, warranty covers defects in material or workmanship. It does not cover maintenance, corrections to installations, or situations when the machine is operated in circumstances that exceed the limitations printed above.

Product Information:

The UC is available in two cube sizes. The ice size cannot be changed significantly. The ice is stored in an insulated bin with ice level automatically maintained by the control system.

A back flow preventer may be required by local plumbing codes.

115 volt models include a 5.5 ft. power cord with NEMA 5-15P plug.

Air cooled models flows in the right front and out the left front and include a cleanable air filter.

Legs are provided, thread size is 5/8-11. Replacement leg kit number is KLP7.

Machine may be installed without legs.

For available options and kits, see sales literature.

Model	Electrical (Volts/Hz/Phase)	Condenser	Cube Size	Maximum Fuse Size or Breaker (Amps)	Power Cord Termination	Refrigerant Charge (oz) (R-134a)
UC2024SA-1A	115/60/1	Air	Small	15	5-15P plug	15
UC2024MA-1A	115/60/1	Air	Medium	15	5-15P plug	15
UC2024SW-1A	115/60/1	Water	Small	15	5-15P plug	12
UC2024MW- 1A	115/60/1	Water	Medium	15	5-15P plug	12
UC2724SA-1A	115/60/1	Air	Small	15	5-15P plug	14
UC2724MA-1A	115/60/1	Air	Medium	15	5-15P plug	14
UC2724SW-1A	115/60/1	Water	Small	15	5-15P plug	11
UC2724MW-1A	115/60/1	Water	Medium	15	5-15P plug	11

Cabinet Drawing

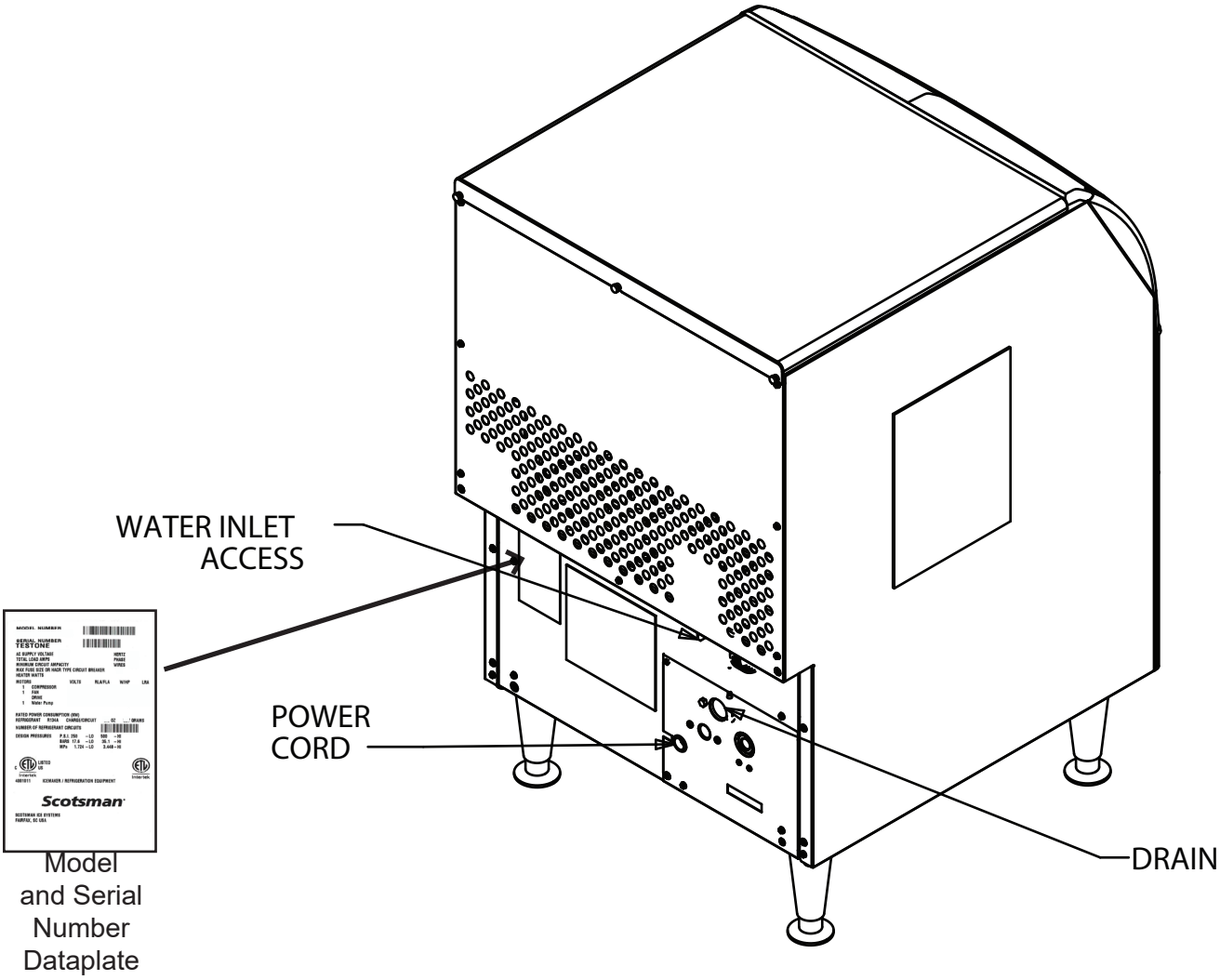

Plan and Front Views

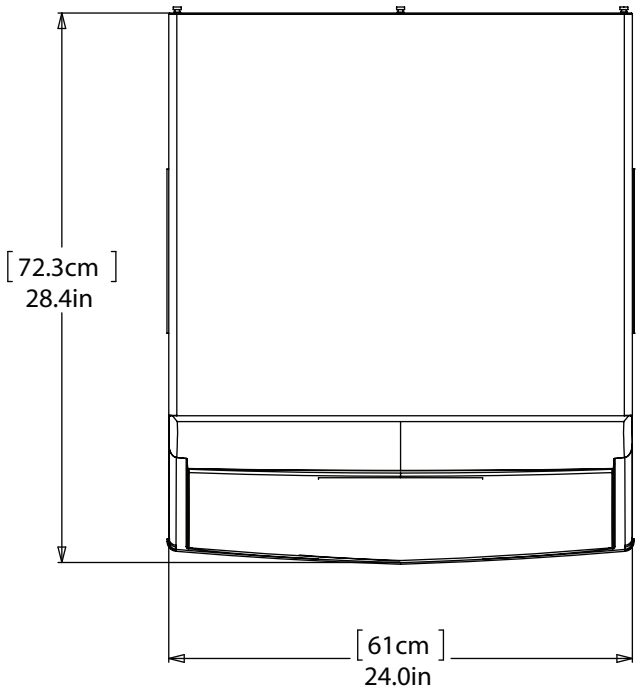

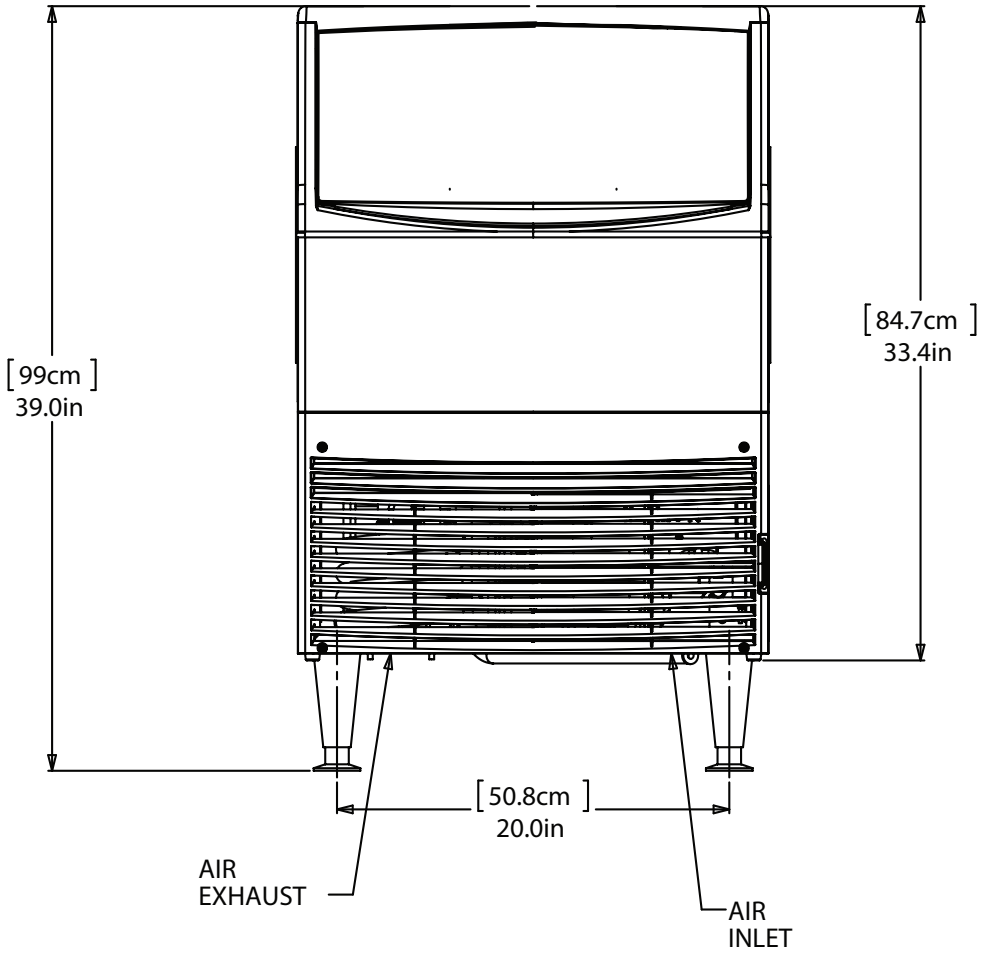

Side and Back Views

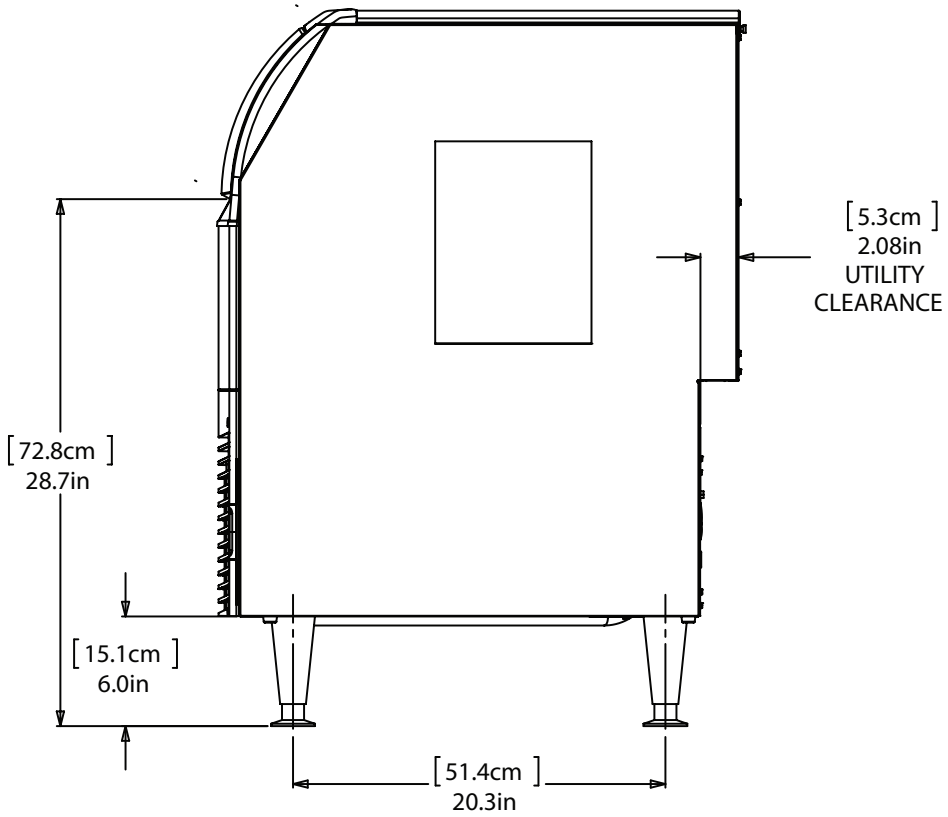

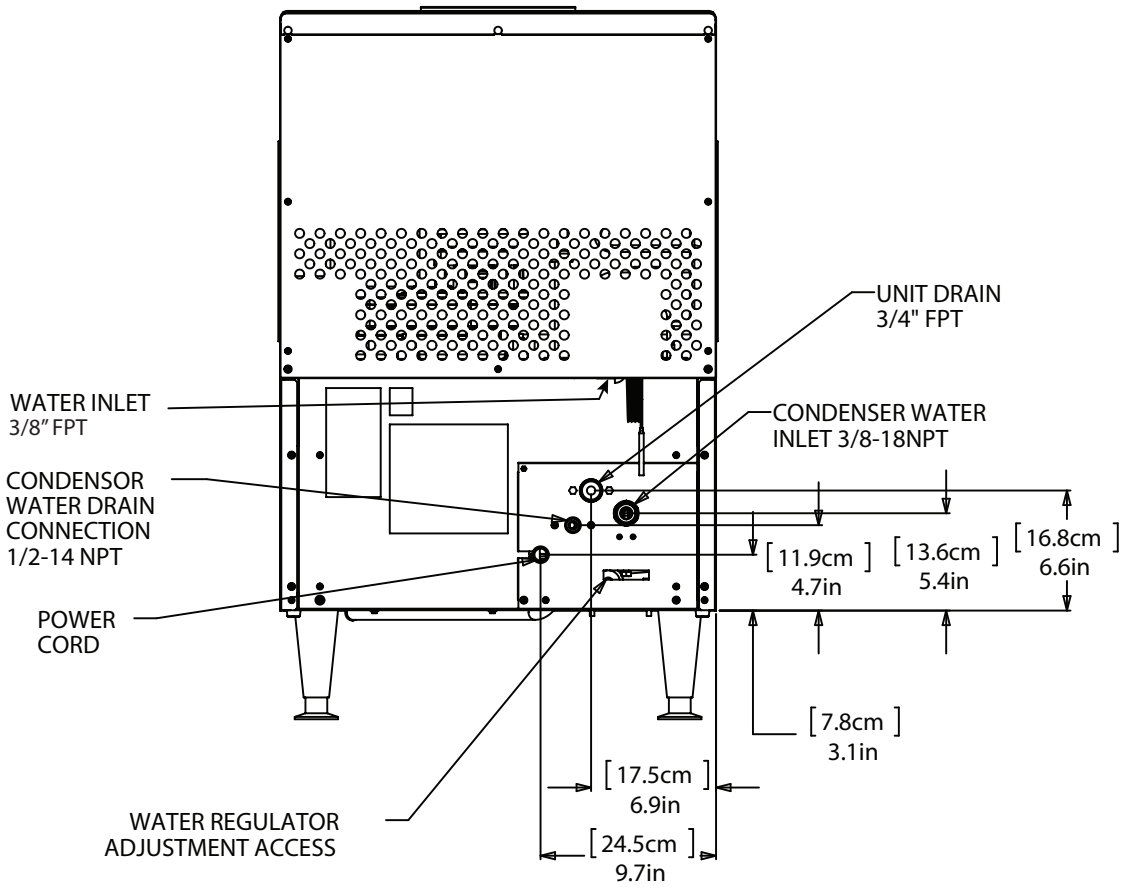

Placement

The location of the equipment should be selected with care. Consideration should be given to allow adequate space for air cooled models to breathe.

The ice machine is not designed for outdoor use. It must be installed indoors, in a controlled environment. The air and water temperatures must not exceed rated limits.

Scotsman assumes no liability or responsibility of any kind from products manufactured by Scotsman that have been altered in any way, including the use of any part and/or other components not specifically approved by Scotsman.

Scotsman reserves the right to make design changes and/or improvements at any time.

Specifications and design are subject to change without notice.

Airflow on air cooled models:

- Intake from the right grill
- Exhaust from the left grill

Do not install where this air flow is blocked.

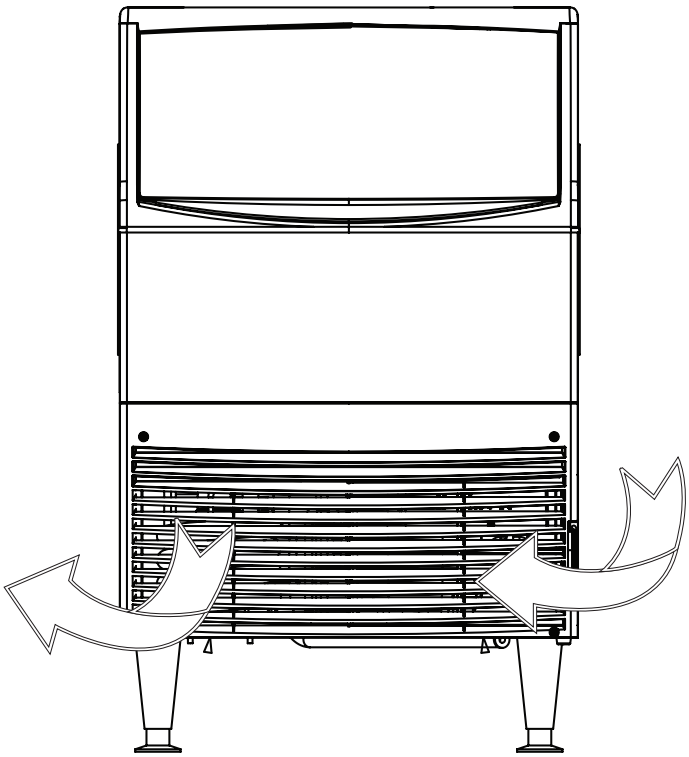

The power outlet must be located within the length of the supplied power cord. If legs will be used, allow space for the total cabinet height.

Air cooled models in a small room will require ventilation to exhaust heat from the condenser. The condenser fan and motor will generate some noise while the machine is running. Noise sensitive areas should consider water cooled equipment or locate the machine where the noise from ice making will not objectionable.

Unpack

1. Separate the carton from the shipping pallet
2. Inspect for any hidden shipping damage. If any is found, retain carton and notify carrier for potential claim. Shipping damage is not covered by warranty.

CAUTION — **Tip Over hazard.**

To prevent injury or damage to the machine please use caution when lifting the unit.

3. Remove bolts holding machine to pallet.
4. Install the legs. The legs are to be screwed into the same holes the shipping bolts were removed.
5. Remove the protective plastic covering the panels. The longer it is left on the panel, the more difficult it will be to remove it.

Spacing:

No additional spacing is required at the top or sides. However, suggested minimum side clearance for the installation is 1/8'' or 3.2 mm and suggested minimum top clearance is 1/4" or 6.4 mm.

The machine may be installed with 0 clearance at the back. Do not block louvers at the front of the cabinet.

Pre Installation:

Water supplied to the ice machine should be filtered. Install a filter system that filters out suspended solids. It may be necessary to add a coarse pre-filter ahead of the fine filter.

Inspect the place where the ice machine is to be installed. Check for:

- Space for the cabinet
- Water Supply
- Drain Availability
- Electrical Power Supply

Note: The building drain inlet must be lower than the drain outlets at the back of the ice machine. The water supply must have a hand shut off valve accessible when the unit is installed.

For the Plumber

1. Connect cold potable water to the 3/8” FPT inlet water fitting, located below the upper back panel. A water filter is recommended. Flush the water line prior to connecting to the ice machine.

A loop of copper tubing may be used between the ice machine and the water supply. This will allow the ice machine to be pulled out from its installed location without disconnecting water. No back flow preventer is required in the potable water line. This is provided by the sump inlet, which is above the sump water level which then cannot be siphoned.

2. Connect a drain tube to the drain fitting. Drain tubes for a water cooled machine should be run separately. The bin drain fitting is 3/4’’ FPT. **And it is plastic. Do not overheat.**
   - Drain tube material must be rigid and meet local code.
   - Traps in the bin drain line without vents ahead of them will cause poor draining
   - The bin drain must be vented if there is a long horizontal run 5 feet or more. All drains are gravity and must have a minimum fall of 1/4’’ per foot of horizontal run.
3. Maintain the air gap required by local code between the end of the drain to, and the building drain receptacle.
   - Drain tubing should be insulated to prevent condensation from forming on the tubing.
4. Water cooled models have a separate 3/8” FPT fitting for condenser water inlet. DO NOT FILTER water to this connection. The condenser drain is 1/2’’ FPT and does not need a vent.

Water Cooled and Recirculating Systems Note

Water cooled equipment may be connected to a closed loop recirculating system. See the pressure limits on page 2.

The included water regulating valve will vary the amount of coolant needed to maintain a constant discharge pressure. Higher coolant temperatures will result in increased coolant flow to maintain the discharge pressure set point.

For the Electrician

This is a cord-connected unit and must be on a separate single phase power supply. Check the name plate for the correct voltage. The maximum fuse size for this circuit should be 15 A, per the nameplate use fuses or HACR circuit breaker.

Follow all local codes. This unit must be grounded. Do not use extension cords and do not disable or bypass the ground pin on electrical plug.

Note: Electrical outlets can become worn and the connection can then be erratic. Have it replaced if it is loose.

After utility connections

1. Level the cabinet, use the leg levelers on the end of the legs to adjust to cabinet height. Legs should have been installed when the unit was unpacked.
2. Wash the bin and hood. If desired, the interior of the bin could be sanitized.
3. Locate the scoop, wash it and have it available for use when needed.

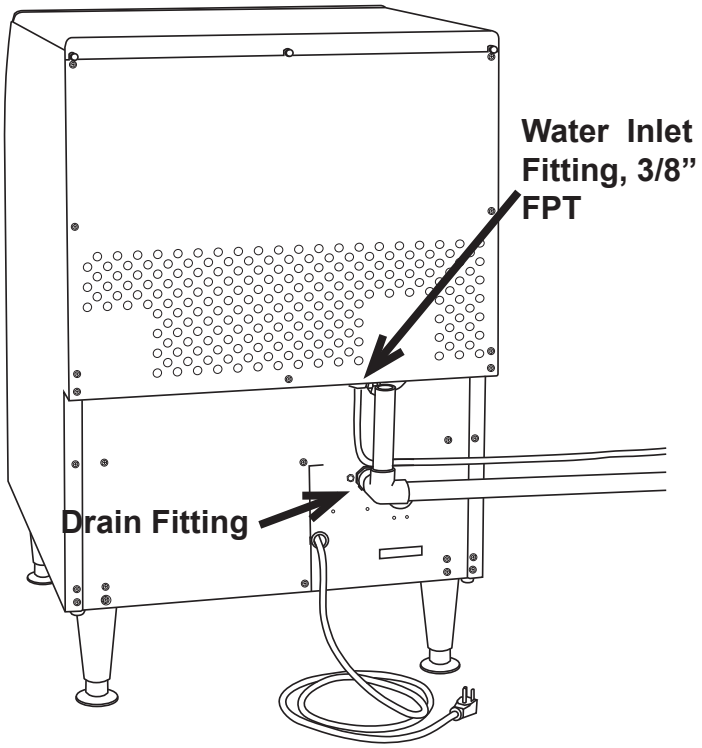

Initial Start Up

Final check list:

	Ice machine is installed indoors with air and water temperature controlled within the limitations detailed in this manual
	Ice machine is level in its final position
	Electrical disconnect (switch or plug as required) is within sight of the installed machine
	Electrical circuit is dedicated to this ice maker
	Voltage has been confirmed within the specifications in this manual and the name plate on the ice maker
	Plumbing connections are complete and tested for leaks
	Ice maker is installed with proper clearance, allowing for service and utility connections
	Water shut off valve installed near the ice maker
	All packing material has been removed.

Start up:

1. Remove louvered front panel.
2. Open the water valve to allow water to the unit. Check for leaks, if any found correct them.
3. Switch electrical supply on.
4. Move the On/Wash/Off rocker switch to On.

The machine will start the ice making process. The Anti-Slush light will be on, and after a 90 second delay, water will flow into the sump. The unit starts in a 90 second harvest or defrost mode before switching to the freeze mode.

Air cooled models will discharge warm air out the left side of the front panel. Water cooled models will discharge warm (about 120^{0}F/48^{0}C) water out of the condenser drain.

Freezing will continue until ice has formed adequately, then the system will switch to a harvest mode and the ice will release as a group, falling past the ice sensing plate and into the bin. When ice moves the ice sensing plate, that triggers the end of the harvest cycle.

5. Move the On/Wash/Off switch to the off position to switch the machine off. Scoop out any ice in the bin.
6. Create a solution of sanitizer. Mix 4oz/118ml of NuCalgon IMS and 2.5gal/9.5L of (90^{0}F/32^{0}C to 110^{0}F/43^{0}C) potable water to create a 200 ppm solution.
7. Sanitize bin by wiping all surface areas with the sanitizer solution. Allow to air dry.
8. Move the On/Wash/Off switch to ON.
9. Replace louvered panel.
10. Give the owner/user this manual, instruct him/her in the operation and maintenance requirements of the unit. Make sure they know who to call for service.

Fill out the Customer Evaluation and Warranty Registration form, and mail it in to Scotsman or register the unit at Scotsman's website (www.scotsman-ice.com).

Once started, the ice machine will automatically make ice until the ice piles up onto the ice sensing plate, holding it open. The typical ice level when the machine is off will be several inches below the door. When ice level drops from use or meltage, the ice machine will resume making ice.

Tip: To maximize ice storage, scoop the ice to the sides and front of the bin.

Noise:

This is a commercial ice machine. It contains a powerful compressor, and, if air cooled, a fan motor. It will produce some noise when it is making ice. Every effort was made during its design to minimize the sound level but some is unavoidable.

Typical Cycle Times (minutes)

Note: First cycle after any restart will be longer than listed here.

	70/50°F. (21/10°C.)	90/70°F. (32/21°C.)
CU2024	16	19
CU2724	12	15

The time to fill a warm storage bin from empty varies by cabinet temperature and cycle time, but will take about 8 hours.

Use and Operation

To use, simply lift the door by its bottom edge and slide it up and into the top of the machine. Use the scoop to remove ice and close the door.

Air cooled models must be able to take in room air and discharge air heated by the ice making process. They will make the most ice if there is plenty of room to breathe.

Blockage of vents or exposure to excessive heat will reduce the ice making and storage capacity.

The storage bin is insulated but not refrigerated, so ice will melt during use. That is normal and assures that fresh ice is available in the bin.

On air cooled models the fan will make some noise during operation, however rattles and other vibrations are not normal and should be attended to.

It is normal for the water to occasionally stop flowing over the evaporator (ice making surface) for a few seconds.

If the machine is in a space colder than the minimums listed it can become damaged.

WARNING

Risk of Personal Injury

The cabinet is not designed to support anything placed on it. Do NOT step or stand on it.

This appliance is not intended for use by persons (including children) with reduced physical, sensory or mental capabilities, or lack of experience and knowledge, unless they have been given supervision or instruction concerning use of the appliance by a person responsible for their safety.

Children should be supervised to ensure that they do not play with the appliance.

CAUTION

The ice making surface can be damaged by abrasion or by sharp objects. Do NOT scrub the ice making surface with anything.

Ice Bridge Thickness Adjustment

Note: The bridge thickness adjustment is used to obtain the CORRECT size, not to adjust to individual preferences. Do NOT make the ice bridge too thick or too thin, as either will reduce ice making capacity. Do NOT attempt to adjust the machine to release individual cubes. There is only ONE correct size.

Refer to the Ice Thickness Diagram for proper ice size.

Access the controller by removing the front panel and pulling out the electrical panel drawer.

Adjust by pushing the + sign or – sign on the ice bridge adjustment section of the control panel. Changing bridge thickness should be a one-time adjustment as the machine will automatically maintain that ice thickness.

Controller Diagram: Adjustment Indicator Lights

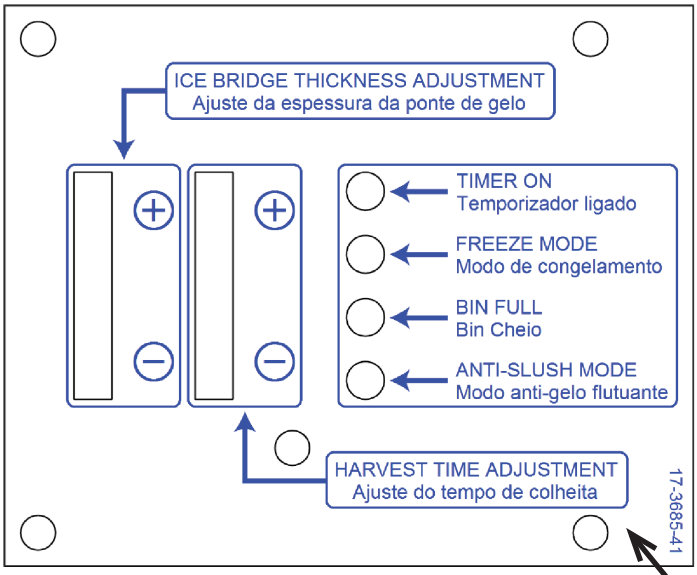

Each push and release of the + or - button will change the lights that glow or blink indicating a change in ice size.

Example: pushing + one time changes a blinking light to steady on type. If the lights are on steady a single push of + will add one more light to the right and it will blink.

There are 10 settings. All 5 lights on steady is the maximum setting and one blinking light is the minimum.

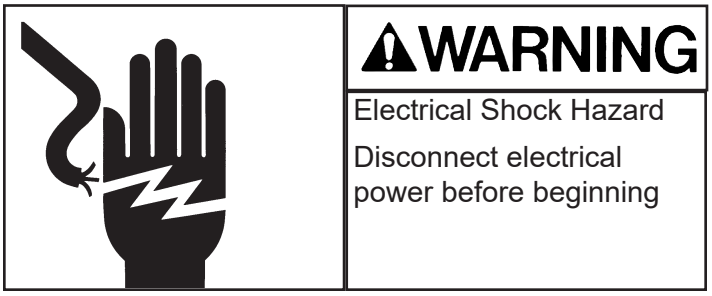

Ice Thickness Diagram

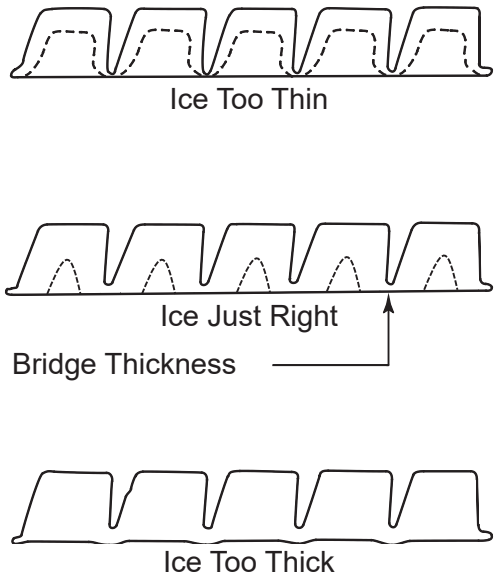

Harvest Adjustment Not Used

Indicator Light Reference

There are four indicator lights visible when the electrical component drawer is pulled out.

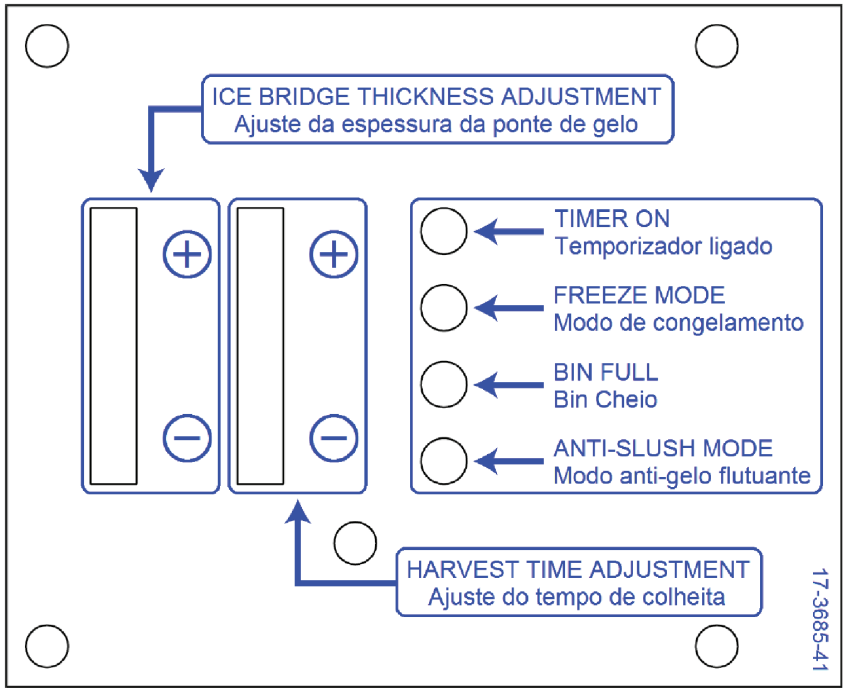

Timer On

- This light is switched ON when the freeze cycle has progressed significantly enough for the evaporator thermistor to have reached its freeze preset temperature. At this point there are only a few minutes left in the freeze cycle. It is also switched ON when the harvest cycle has been on and the evaporator has reached its set defrost temperature.

Bin Full

- Normally OFF. This light is switched on and off by the position of the ice sensing plate.

Freeze Mode

- Normally ON during a freeze cycle. OFF during harvest or ice release.

Anti Slush Mode

- Normally OFF. This light is switched ON when the pump is stopped during a freeze cycle.

A typical cycle begins when there is no ice on the ice sensing plate (Bin Full light OFF). The compressor and water pump will switch ON and when the discharge pressure increases to the cut in point of the fan pressure switch the fan motor will begin to rotate the fan. The hot gas and inlet water solenoids are off.

This continues until the evaporator temperature sensor reaches a preset point, which causes the pump to stop for a few seconds (the Anti Slush Mode light will switch ON). After the Anti Slush light goes out and the water pump is switched back on, the freeze cycle continues until the evaporator temperature sensor reaches the timer start point, (Timer Cut In light is switched on).

When the timer has reached the end of its preset freeze time, Harvest begins (the Freeze Mode light is switched off). The water pump stops, the hot gas valve and inlet water solenoid valve open and the discharge pressure falls, so the fan motor stops. Harvest continues until the released ice causes the ice sensing plate to move and the Bin Full light will either: a) blink On and Off, if the ice bin is not full, or b) switch On when the bin is full and ice is on the ice sensing plate.

If the bin is full the machine will shut off and be in a stand by mode. If not full, the cycle will repeat.

Maintenance and Cleaning

Frequency: Cleaning is recommended about twice a year. The ice machine will not maintain a sanitary condition without human intervention.

Prep: Obtain food grade scale remover such as Scotsman Clear 1. You will also need a clean container, sanitizer, clean cloths and clean rubber gloves. Use of a spray bottle is recommended for ease of washing hard to reach areas.

Note: The ice machine must be connected to water, power and drain during this procedure.

1. Remove the front panel and move the on/off/wash switch to Off.
2. Remove the ice from the ice storage bin.
3. Drain the sump water into the container by removing the plug from the drain hose. The drain hose is under the control box area. Return the plug to the drain hose.

⚠CAUTION

Ice machine scale remover contains acids. Acids can cause burns.

If concentrated cleaner comes in contact with skin, flush with water. If swallowed, do NOT induce vomiting. Give large amounts of water or milk. Call Physician immediately. Keep out of the reach of children.

4. Put the rubber gloves on.
5. Mix a solution of scale remover and potable water.

Mix a solution of 5 oz or 150 cc of Scotsman Clear 1 Scale Remover and 2.5 quarts or 2.4 liters of clean, warm (95°F/35°C to 115°F./46°C) potable water.

6. Remove the spray bar by unsnapping it from the left and right ends.
7. Remove the ice level control plate by unsnapping it.
8. Place both into the scale remover. Wash them with the clean cloths.
9. Install both the spray bar and ice level control plate back onto the ice machine.
10. Pour the scale remover into the machine's sump.
11. Put the machine into a wash mode. Operate it that way for 20 minutes.
12. Stop the wash mode.

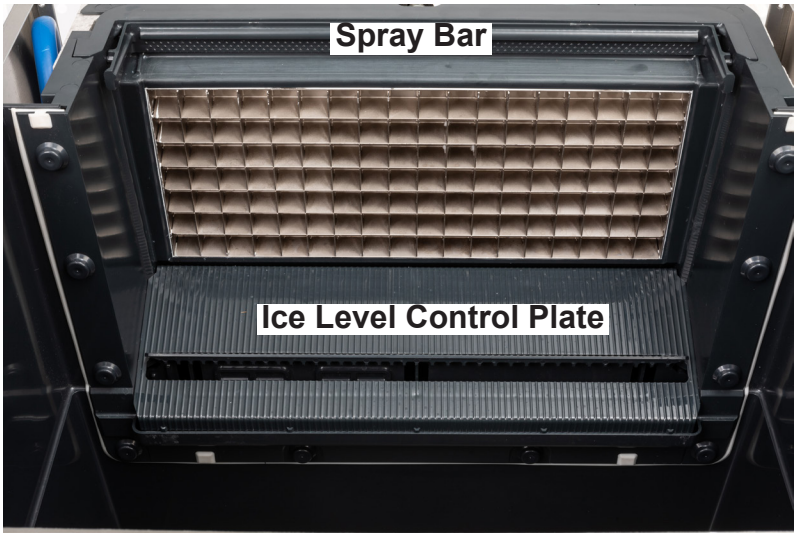

13. Drain the scale remover solution by removing the plug from the drain hose. Return the plug to the drain hose.
14. Check that the scale has cleared from the spray bar. Remove spray bar if needed to clear any scale, be sure it is returned to its original position.
15. Mix a second solution of scale remover and lukewarm potable water.
16. Wash the interior of the ice storage bin with the scale remover solution.
17. Pour any remaining scale remover solution into the bin. Be sure it drains away.
18. Mix a solution of sanitizer and lukewarm potable water: Mix 4 oz/118ml of NuCalgon IMS and 2.5 gal/9.5L of (90^0F/32^0C to 110^0F/43^0C) potable water to create a 200 ppm solution.
19. Pour half of the solution into the sump.
20. Switch the control into a wash mode. Operate it that way for 10 minutes and then switch it to off.
21. Drain the sump by removing the drain plug from the drain hose. Return the drain plug to the drain hose.
22. Wash all interior surfaces of the ice storage bin, including bin door, with the remaining sanitizer solution.
23. Pour a gallon of hot potable water into the bin to clean out the drain.
24. Switch the control to ice making and return the front panel to the unit.

Condensers and Air Filter Cleaning

Filters and Air Cooled Condenser

The air filter located on the lower front grill will capture airborne dust during operation. As the dirt builds up, it begins to restrict air flow and causes the refrigeration system to work less efficiently. Clean the air filter regularly.

Remove the filter by sliding it to the right until it is clear of the ice machine.

Note: It is a snap fit and the snaps may be very tight. Pull hard with two thumbs.

Remove dust and dirt by washing the filter in a utility sink.

Reinstall filter in the ice machine.

CAUTION

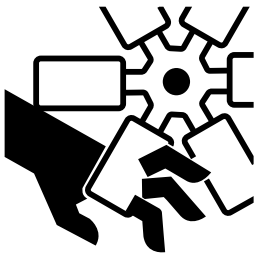

Rotating fan blade can cause personal injury.

Unplug unit from power supply before beginning to clean condenser

Condenser

The condenser fins require semi annual cleaning. Use caution to prevent damage to the condenser fins.

Lightly brush dust from the condenser.

Use a vacuum to thoroughly clean the condenser.

Water cooled equipment may be connected to a closed loop recirculating system or to a regular water supply. See the pressure limits on page 2.

The included water regulating valve will vary the amount of water or coolant needed to maintain a constant discharge pressure. Higher coolant temperatures will result in increased coolant flow to maintain the discharge pressure set point.

That pressure is factory set to 135 PSIG. If needed, it may be field adjusted to that set point. An access port to the adjustment stem is available on the lower back panel.

In areas with highly mineralized water, the inside of the condenser may become coated with scale. When that occurs the amount of water used by the condenser will increase, as the water regulating valve opens further to keep the discharge pressure at the set point.

Scale on the inside of the condenser may be cleaned by circulating an acid solution with an auxiliary pump.

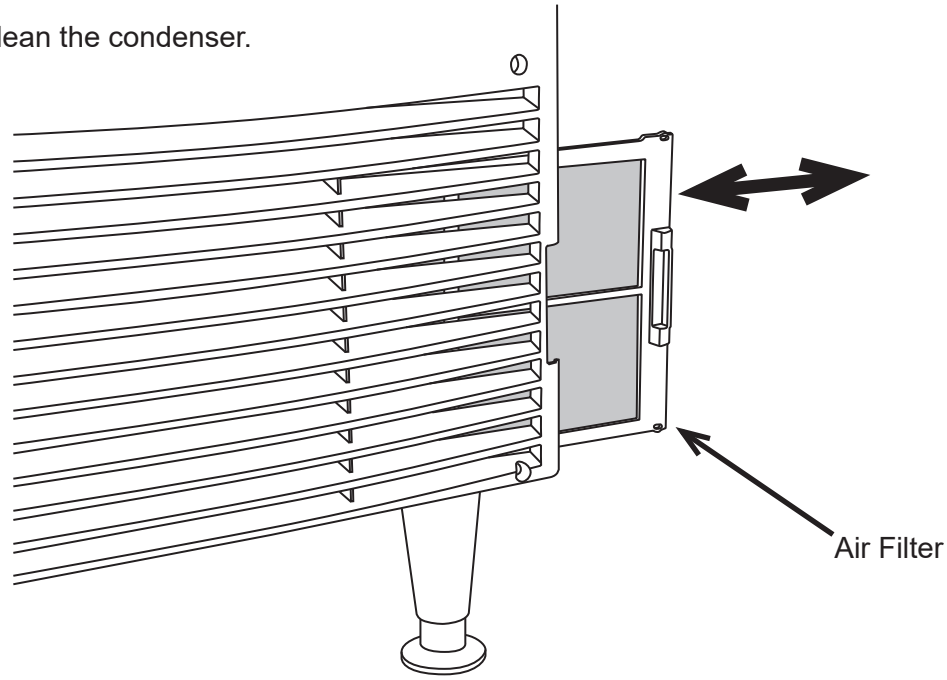

Remove and Clean the Air Filter

The Systems

Commercial cube ice machines must do several things to supply the user with ice:

1. Determine when to make ice.
2. Produce a user acceptable quality form of cubed ice.
3. Determine when the ice is ready for release.
4. Determine when the ice has been released.
5. Refill the sump with water.
6. Discharge extra water to dilute any mineral build up.
7. Determine when to shut off.

Those seven requirements are taken care of by the control system, water system and refrigeration system.

Control System:

The components of this product's control system are the controller, the evaporator thermistor, the ice plate flap switch and the pressure controls.

The evaporator thermistor is attached to the suction line, near the evaporator. As ice thickness increases, the temperature of the suction line will decrease. When it reaches a preset temperature, the resistance of the thermistor will also be at a preset point. That triggers a timer in the controller which finishes the freeze cycle.

The ice sensing flap is normally up or open. A magnet on the right end is positioned away from the plate switch, signaling to the controller that ice is needed. When the ice releases, it falls by gravity over the ice sensing plate, closing the flap and causing the magnet to pass by the plate switch. This terminates the harvest cycle. If ice has built up in the bin enough to cause the plate flap to remain depressed, the magnet is now positioned next to the plate switch, signaling that the bin is full and no ice is needed. Ice making will stop.

There is no maximum freeze or harvest time. There is minimum harvest time, based on the suction line thermistor reaching a preset temperature. If, during harvest, the ice has not released to trip the flap switch, and the suction line thermistor has reached a preset point, the harvest will continue until it times out. After that the system returns to a freeze mode.

Water System:

The components of the water system are the inlet water solenoid, the overflow standpipe, the water distributor and the water pump.

Water enters the sump during the harvest cycle thru the open inlet water solenoid valve. The inlet water solenoid valve remains open for a fixed time, then shuts off. That amount of time is enough to fill and overfill the sump, the overfill amount dilutes the sump water and keeps the machine from excessive mineral build up.

The water pump circulates the water during the freeze cycle. It forces water up to the spray bar, where it is distributed evenly to flood the evaporator surface. Water flows over the ice sensing plate, but goes into the open plate door, and back into the sump.

Refrigeration System:

The components of the refrigeration system are the compressor, condenser, thermostatic expansion valve and the hot gas valve.

The refrigeration system has three modes: Freeze, harvest and off. During freeze the compressor is circulating refrigerant thru the condenser and thermostatic expansion valve and into the evaporator. During harvest the hot gas valve coil is energized, opening a path to the inlet of the evaporator. This forces hot gas into the evaporator, warming it up enough to release the ice frozen to it. When the bin is full, the system is off.

Selected Water Components

Ice sensing plate and flap.

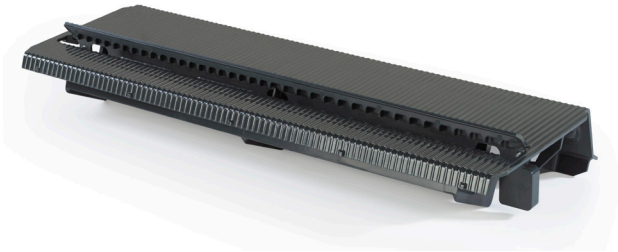

The ice sensing plate or ice chute is positioned at the base of the evaporator and over the sump. It is mounted at an angle that, during freeze, directs water into the open sensing flap or, during harvest, directs ice towards the ice storage bin.

The ice sensing flap is held open by a counter-balancing weight. The flap has a magnet attached to an arm on the right end. An ice sensing switch is near to the magnet but normally not activated by it. When the flap is moved by the weight of ice, the arm and magnet also move, bringing the magnet close enough to activate the switch. The repositioned flap and magnet can either trigger the end of harvest or shut down on bin full.

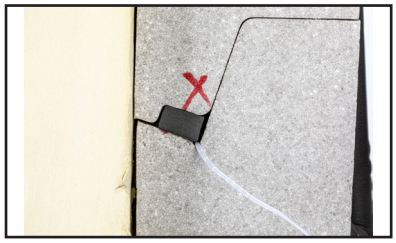

Ice sensing pate switch

The sensing plate switch is on the right side of the upper cabinet. It is triggered by the magnet in the ice sensing flap.

Spray bar

The spray bar, or water distributor, is located at the top of the evaporator. It is held in by snap catches on each end. During the freeze cycle the water pump forces water up to the back of the water distributor, where is flows under pressure thru holes in the distributor. Water from it flows down over the evaporator plate.

Evaporator

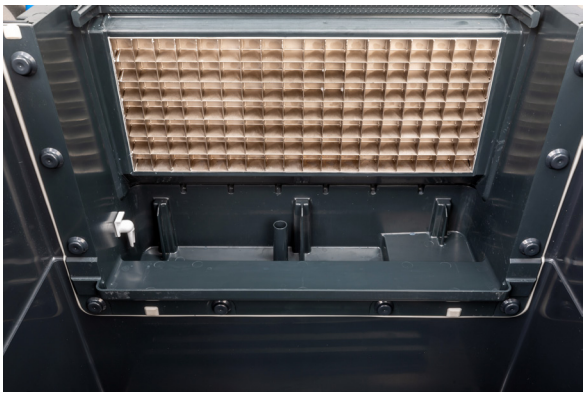

The evaporator is a refrigerated surface that forms the ice into a cube like shape. The evaporator is vertical, metal and framed by injection molded plastic. It contains a metal grid that gives the cubes their shape and size. Water flows over it during most of the freeze cycle.

Sump

The sump contains the water charge for every batch of ice. It fills one time per cycle. It also contains an overflow standpipe, which limits the water level and drains excess water.

Inlet water solenoid valve

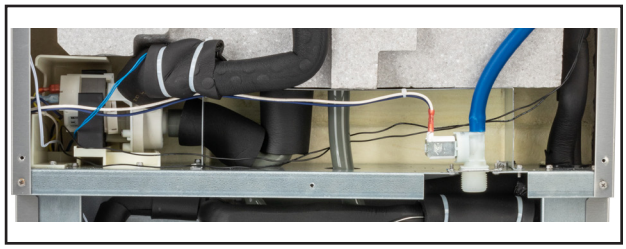

The inlet water solenoid valve, located at the back of the unit, opens during harvest to refill the sump. It is a flow control valve, limiting the gpm flow into the machine. Service of it requires removal of the back panel.

Water pump

The water pump is located at the back of the machine. It is on throughout the freeze cycle, except for a few seconds early in the cycle. It is off during harvest. Service of it requires removal of the back panel.

Selected Electrical Components

Controller

The controller is the part that operates the machine. It is connected to:

- Pressure controls
- Hot gas valve
- Evaporator thermistor
- Sump water thermistor
- Sensing plate switch
- Contactor coil
- Water pump
- Inlet water valve
- Fan motor (if air cooled)
- Master switch
- Transformer

Compressor

Vapor pump that forces refrigerant thru the system

Water pump

When powered, it circulates water over the evaporator plate

Inlet water valve

When energized, it opens to let water into the sump.

Evaporator thermistor

Attached to the evaporator refrigerant outlet tube, the resistance is checked by the controller to determine when the ice is nearly ready for harvest.

Sump water thermistor

Inserted into the water pump hose, its resistance is checked by the controller to determine when the water pump should be temporarily stopped to avoid slush in the sump.

Pressure controls

There are two, high pressure cut out and fan motor on air cooled models. The high pressure cut out stops operation if discharge pressure is too high. The fan motor pressure control cuts the fan off when discharge pressure is low and switches it back on when it has increased.

Sensing plate switch

Normally open, closes when the magnet on the sensing plate is next to it. Controls the harvest cycle and the on off operation of the machine.

Selected Refrigeration Components

Thermostatic expansion valve

The thermostatic expansion valve, or TXV, is the metering device for the refrigeration system.

Superheat numbers are not listed because it changes with heat load and with the modulation of the valve.

Hot gas valve

The hot gas valve is located between the discharge line and the evaporator inlet. It is only open during harvest and for a short time during compressor start. It is a ported valve, meaning that it restricts the amount of refrigerant gas that can flow thru it, protecting the compressor from excessive refrigerant.

Compressor

The hermetic compressor is used to circulate refrigerant throughout the entire system. It compresses the low pressure refrigerant vapor causing its temperature to rise and become high pressure hot vapor (hot gas) which is then released through the discharge valve.

Condenser, water cooled.

Heat from the ice making process is discharged into water flowing next to the refrigerant path. Discharge pressure is maintained by a water regulating valve.

Condenser, air cooled.

Heat from the ice making process is discharged into air flowing thru a fin and tube assembly. The tubing is the refrigerant path. An electric fan provides the air flow.

Access valves are at the front of the cabinet.

Evaporator

The evaporator is mounted above the ice storage bin, and ice that forms on it is released during harvest and falls by gravity into that bin. The refrigerant path is a serpentine tube attached to the pan and grid.

Cube sizes are (inches):

Small cube: 7/8 high × 3/4 deep × 1/2 wide

Medium cube: 7/8 high × 3/4 deep × 7/8 wide

Pressure controls

Air cooled models have two pressure controls, a high pressure cut out and a fan motor cycling switch. High pressure switch cut out at 400 PSIG, automatic cut in at 300 PSIG. Fan switch cut in is at 150 PSIG and cut out is at 100 PSIG. Water cooled models have one pressure control, a high pressure cut out.

Controller

The controller is a computer, a computer that has sensors and relays.

The evaporator thermistor provides electrical resistance readings to the controller.

The sump water thermistor also provides resistance readings to the controller.

There are relays for the compressor contactor coil, the water pump, the inlet water solenoid valve and the hot gas valve.

At start up, the inlet water valve and hot gas valve are energized for a set time, after which the compressor contactor is energized. After a few seconds more, the hot gas valve and inlet water valves are de-energized and remain closed until harvest.

When the reservoir water temperature falls to a preset point, the water pump will shut off for 30 seconds. This is the anti-slush period.

During Freeze or Harvest the temperature of the suction line thermistor will change, eventually reaching a setpoint. At that time the Timer light will switch on, indicating that the suction line thermistor's resistance is at the setpoint, which is very near to the end of the cycle.

Restarts

Power Interruption:

An automatic restart process occurs after power is reconnected. The Anti-Slush light will be on. After a 90 second delay, the inlet water valve and hot gas valves are energized, and 15 seconds later the compressor starts. No lights will be on. The inlet water and hot gas valves will be on for 90 seconds. After they shut off the water pump starts and normal ice making begins.

Water Interruption:

There is no shut off for a water interruption unless the model is water cooled. Water cooled models that experience a water interruption will shut the compressor off because the high pressure cut out opens. After a significant amount of time and after the water supply has been restored, the high pressure cut out will close, and the compressor restarts.

Air cooled operation without water will, of course, yield no ice. The freeze cycles will be short and harvest timed.

Load Tables

Stand By	On	Off
Compressor		x
Fan motor		x
Hot gas valve		x
Inlet water valve		x
Water pump		x
Controller	x	

Start Up	On	Off
Compressor	x	
Fan motor		x
Hot gas valve	x	
Inlet water valve	x	
Water pump		x
Controller	x	

Freeze	On	Off
Compressor	x	
Fan motor	x	Off if pressure low
Hot gas valve		x
Inlet water valve		x
Water pump	x	
Controller	x	

Harvest	On	Off
Compressor	x	
Fan motor		x
Hot gas valve	x	
Inlet water valve	x	
Water pump		x
Controller	x	

Ice Sensing Plate and Switch

The ice sensing plate is a flap that is in the ice chute. It is normally open, and during the freeze cycle water flows thru the open hole into the sump.

A magnet is embedded into an arm of that flap, and moves with the flap. It is normally positioned some distance away from the sensing plate switch.

During harvest, the ice releases as a group and falls by gravity over the flap, closing it. That also moves the arm with the magnet to just across from the sensing plate switch. That switch is a magnetic switch and is triggered by the magnet, either ending harvest and restarting freeze if the ice is not holding the flap closed, or ending harvest and causing bin full, if ice is holding the flap closed.

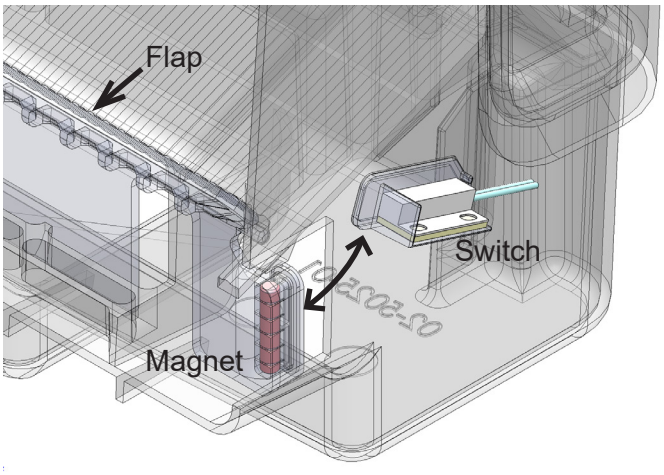

As Flap moves, magnet also moves until it is next to the Flap or Curtain switch.

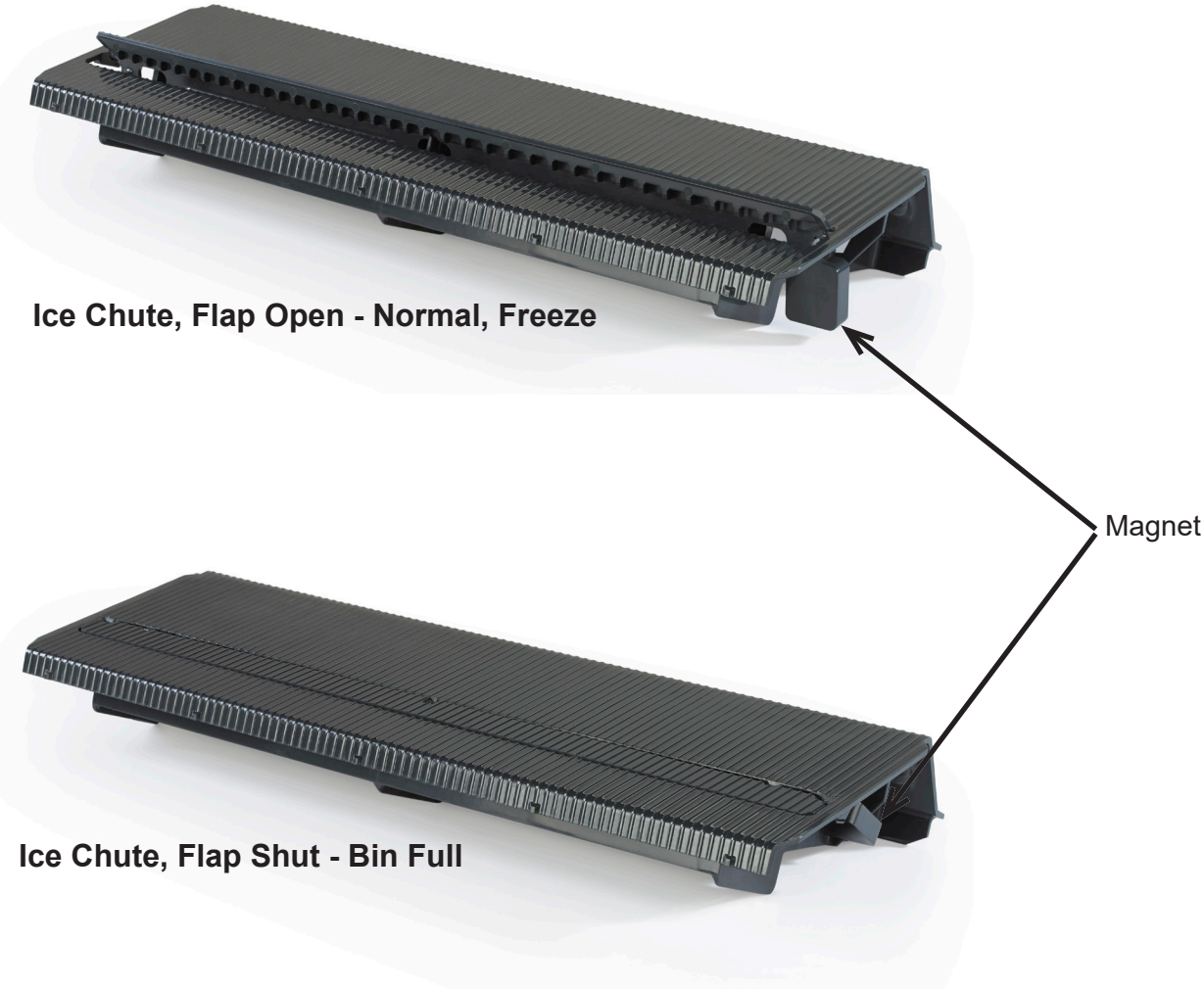

Test Mode

The controller has a test mode that can be used by the service tech to confirm operation.

To use test mode:

1. Place the evaporator thermistor probe in 32°F. water.
2. Place the sump water thermistor probe in 32°F. water.

Note: The water pump does not operate during test mode.

3. Push and hold the right plus (+) button and the lower left minus (-) button for at least 5 seconds. Then release them. The yellow LED will light up for 3 seconds.
4. Push and release the right plus (+) button. The yellow light will switch on if the evaporator thermistor resistance is correct.
5. Push it again and if the water thermistor resistance is correct, the yellow light will switch on.
6. Push and release the left plus (+) button. The blue light will switch on.
7. Push it again and the red light will switch on.
8. Push and hold the right minus (-) button. The green lights will switch on one at a time as long as the button is pushed in. Release when completed.
9. Push and release the right minus (-) button. The yellow light will switch on, indicating correct system memory.
10. Disconnect electrical power to end test mode

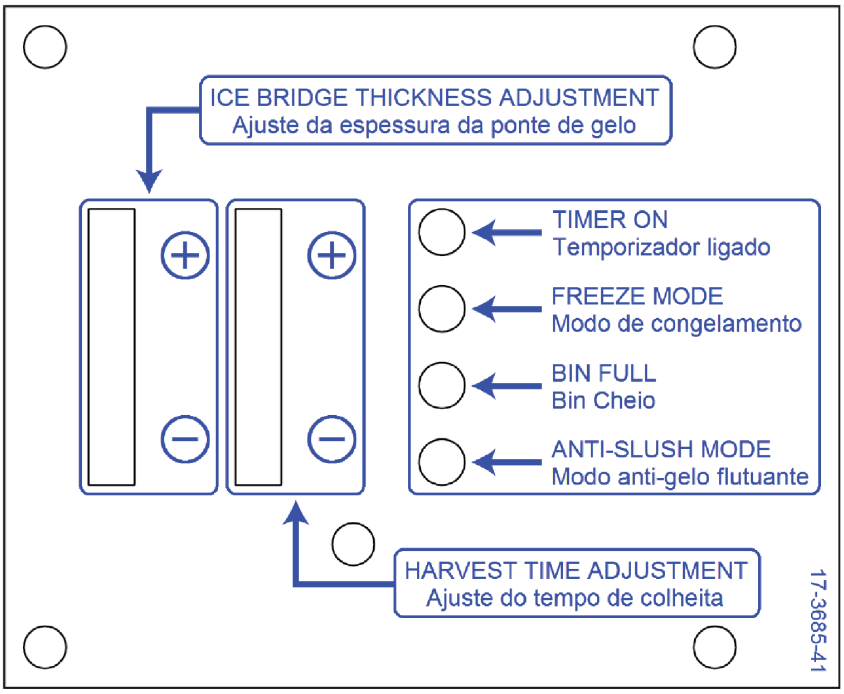

Thermistor Values

Deg. F	Ohms	Deg. F	Ohms	Deg. F.	Ohms	Deg. F.	Ohms	Deg. F.	Ohms
0	85325	51	19381	102	5569	153	1927	204	774
1	82661	52	18873	103	5446	154	1890	205	761
2	80090	S3	18381	104	5325	155	1855	206	749
3	77607	54	17903	105	5208	156	1819	207	737
4	75210	55	17439	106	5093	157	1785	208	724
5	72896	56	16988	107	4981	158	1752	209	713
6	70660	57	16551	108	4872	159	1719	210	701
7	68501	58	16126	109	4766	160	1687	211	690
8	66415	59	15714	110	4663	161	1655	212	679
9	64400	60	15313	111	4562	162	1624	213	668
10	62453	61	14924	112	4463	163	1594	214	657
11	60571	62	14546	113	4367	164	1565	215	646
12	58752	63	14179	114	4273	165	1536	216	636
13	56995	64	13823	115	4182	166	1508	217	626
14	55296	65	13476	116	4093	167	1480	218	616
15	53653	66	13139	117	4006	168	1453.	219	606
16	52065	67	12812	118	3921	169	1427	220	597
17	50529	68	12494	119	3838	170	1401	221	587
18	49043	69	12185	120	3757	171	1375	222	578
19	47607	70	11884	121	3678	172	1350	223	569
20	46217	71	11592	122	3601	173	1326	224	560
21	44872	72	11308	123	3526	174	1302	225	551
22	43571	73	11031	124	3452	175	1279	226	543
23	42313	74	10763	125	3381	176	1256	227	534
24	41094	75	10502	126	3311	177	1234	228	526
25	39915	76	10247	127	3243	178	1212	229	518
26	38774	77	10000	128	3176	179	1190	230	510
27	37669	78	9760	129	3111	180	1169	231	502
28	36600	79	9526	130	3047	181	1149	232	495
29	35564	80	9299	131	2985	182	1129	233	487
30	34561	81	9077	132	2924	183	1109	234	480
31	33590	82	8862	133	2865	184	1090	235	472
32	32649	83	8652	134	2807	185	1071	236	465
33	31738	84	8448	135	2751	186	1052	237	458
34	30855	85	8250	136	2696	187	1034	238	451
35	30000	86	8056	137	2642	188	1016	239	444
36	29171	87	7868	138	2589	189	998	240	438
37	28368	88	7685	139	2537	190	981	241	431
38	27589	89	7507	140	2487	191	965	242	425
39	26835	90	7333	141	2438	192	948	243	419
40	26104	91	7164	142	2390	193	932	244	412
41	25395	92	6999	143	2343	194	916	245	406
42	24707	93	6839	144	2297	195	901	246	400
43	24041	94	6683	145	2252	196	885	247	394
44	23394	95	6530	146	2208	197	871	246	389
45	22767	96	6382	147	2165	198	856	249	383
46	22159	97	6238	148	2123	199	842	250	377
47	21569	98	6097	149	2082	200	828		
48	20997	99	5960	150	2042	201	814		
49	20442	100	5826	151	2003	202	800		
50	19903	101	5696	152	1965	203	787		

Timed Cycles

Normally the control system operates with the evaporator thermistor controlling cube size and the flap / curtain switch controlling harvest time.

If the evaporator thermistor would fail to register a temperature in the expected range (its resistance reading open or shorted), the controller will still go thru a freeze cycle, except it will be timed. This is indicated by flashing of all cube size and harvest time lights.

Cube size will likely not be as before, and could be much larger or somewhat smaller than desired.

There is a maximum harvest time, and if the flap / curtain switch has not been triggered by that time, the controller will return to a freeze cycle and the green Bin Full light will blink. If, after three consecutive harvest cycles the flap / curtain switch has not been triggered, the controller will shut down ice making for one hour. If after twelve cycles the flap / curtain switch has not been triggered, the controller stops ice making. The Bin Full light will remain blinking.

For board with firmware 10.001:

Timed freeze: 1000 seconds.

Maximum harvest: 2 minutes.

For board with firmware 10.005:

Timed freeze: 850 seconds.

Maximum harvest: 3 minutes.

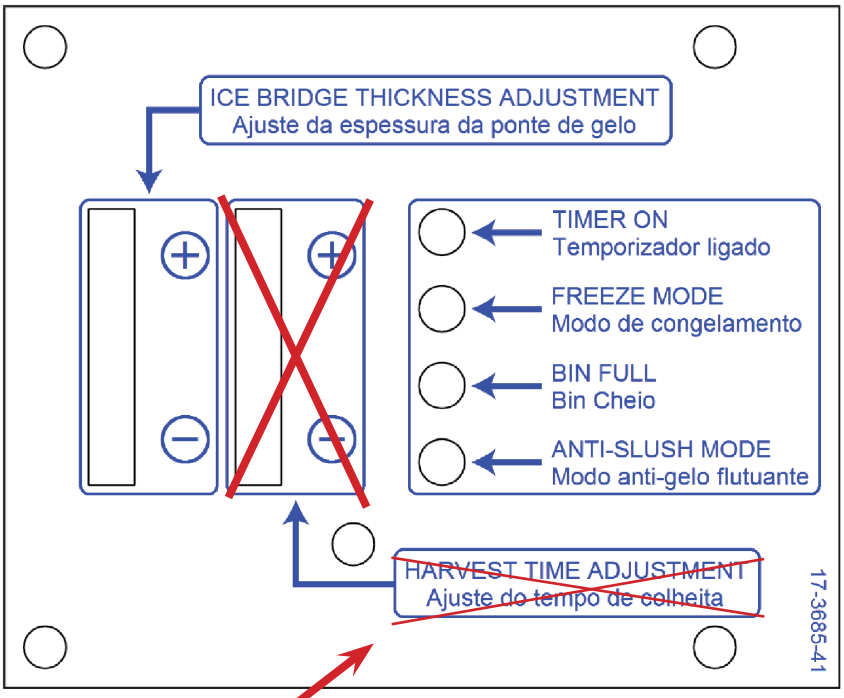

Please note that the set points are not determined by the Harvest Time Adjustment buttons, but by the Ice Sensing Plate and Switch.

Freeze Setpoints

Freeze Setpoints - 10.001 (Old Board Firmware)

Freeze Setpoint	Nominal Thermistor Temperature (°F)	Nominal Thermistor Temperature (°C)	Nominal Thermistor Resistance (kΩ)	Notes
1	22.8	-5.1	42.58	Minimum; smallest cubes
2	21.4	-5.9	44.37	
3	20.0	-6.7	46.25	
4	18.6	-7.4	48.21	
5	17.2	-8.2	50.26	
6	15.8	-9.0	52.40	**[Default Setting]**
7	14.4	-9.8	54.67	
8	13.0	-10.6	57.05	
9	11.6	-11.3	59.53	
10	10.2	-12.1	62.12	Maximum; largest cubes

Freeze Setpoints - 10.005 (New Board Firmware)

Freeze Setpoint	Nominal Thermistor Temperature (°F)	Nominal Thermistor Temperature (°C)	Nominal Thermistor Resistance (kΩ)	Notes
1	29.1	-1.6	35.47	Minimum; smallest cubes
2	27.1	-2.7	37.58	
3	25.0	-3.9	39.90	
4	23.0	-5.0	42.20	
5	21.2	-6.0	44.71	**[Default Setting]**
6	19.0	-7.2	47.47	
7	17.0	-8.3	50.53	
8	15.8	-9.0	52.38	
9	12.8	-10.7	57.30	
10	9.9	-12.3	62.55	Maximum; largest cubes

Note: To check to see which version of the firmware you have, consult the control board and look for either the part number (11-0668-01) or the firmware version (10.005). If you do not see either of those numbers, you are running the 10.001 firmware.

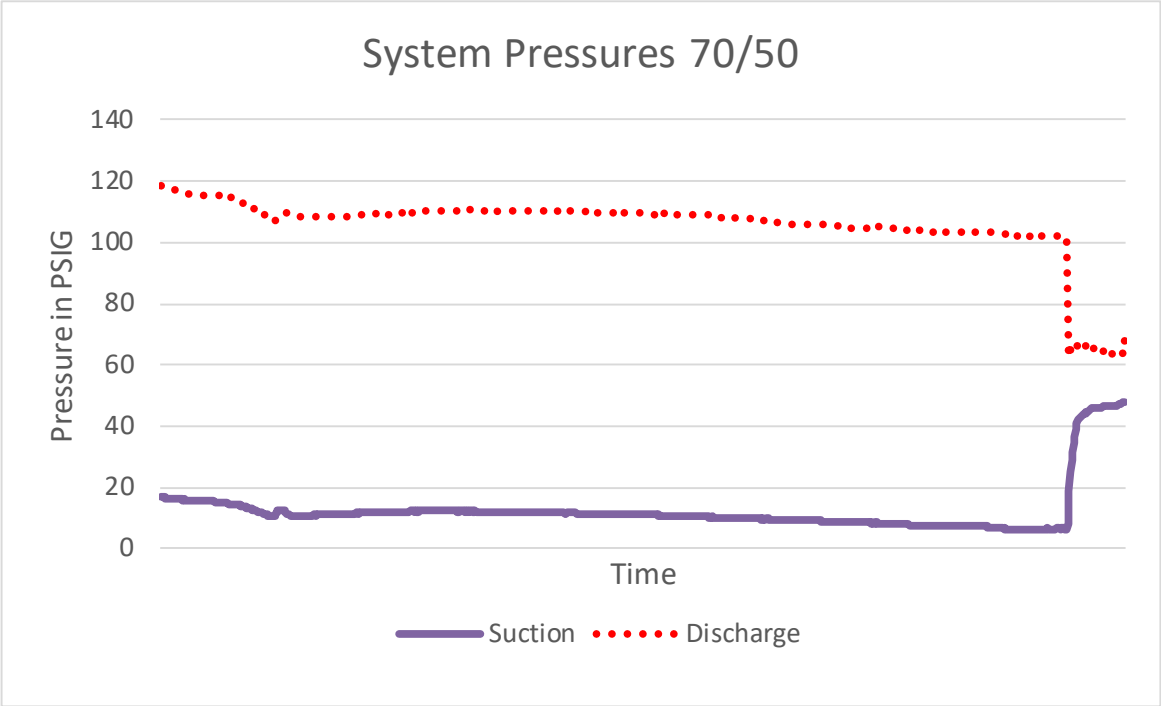

Cycle Time: 15 - 16 minutes

Maximum Suction Pressure in Harvest: 48 PSIG

Unit Current Draw: 6 to 6.5 in Freeze Mode

Suction pressure just before harvest. 6 - 7 PSIG

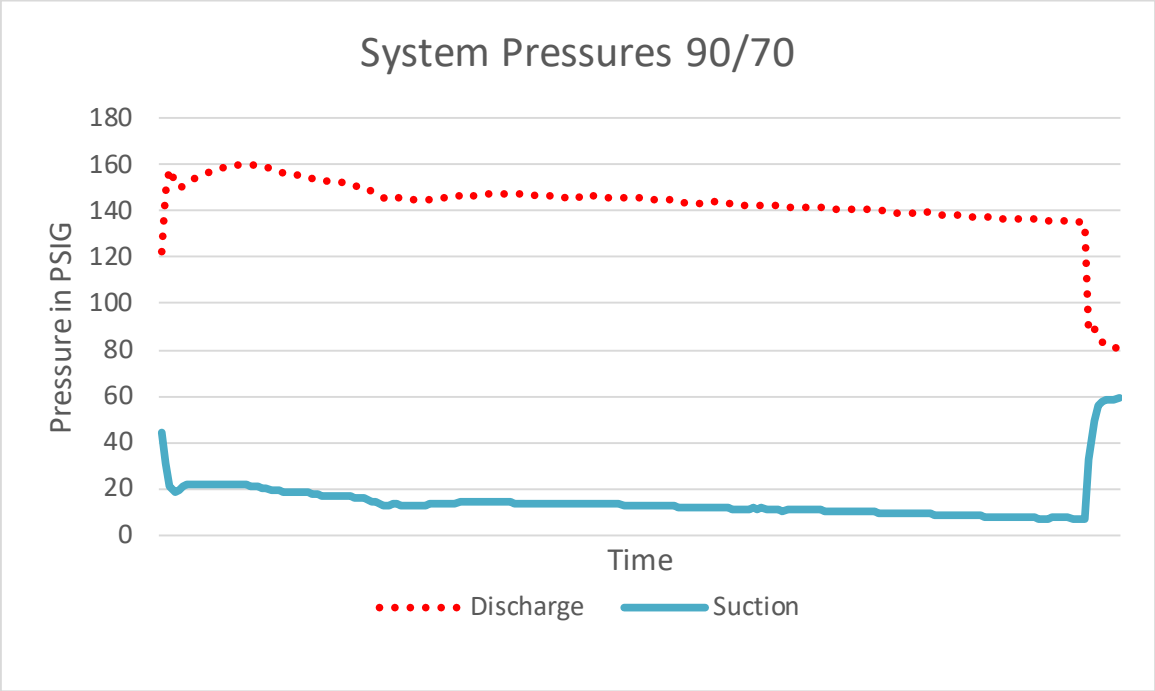

Cycle Time: 18 to 19 minutes

Maximum Suction Pressure in Harvest: 60 PSIG

Unit Current Draw: 6.3 to 6.5 in Freeze Mode

Suction pressure just before harvest: 6 - 7 PSIG

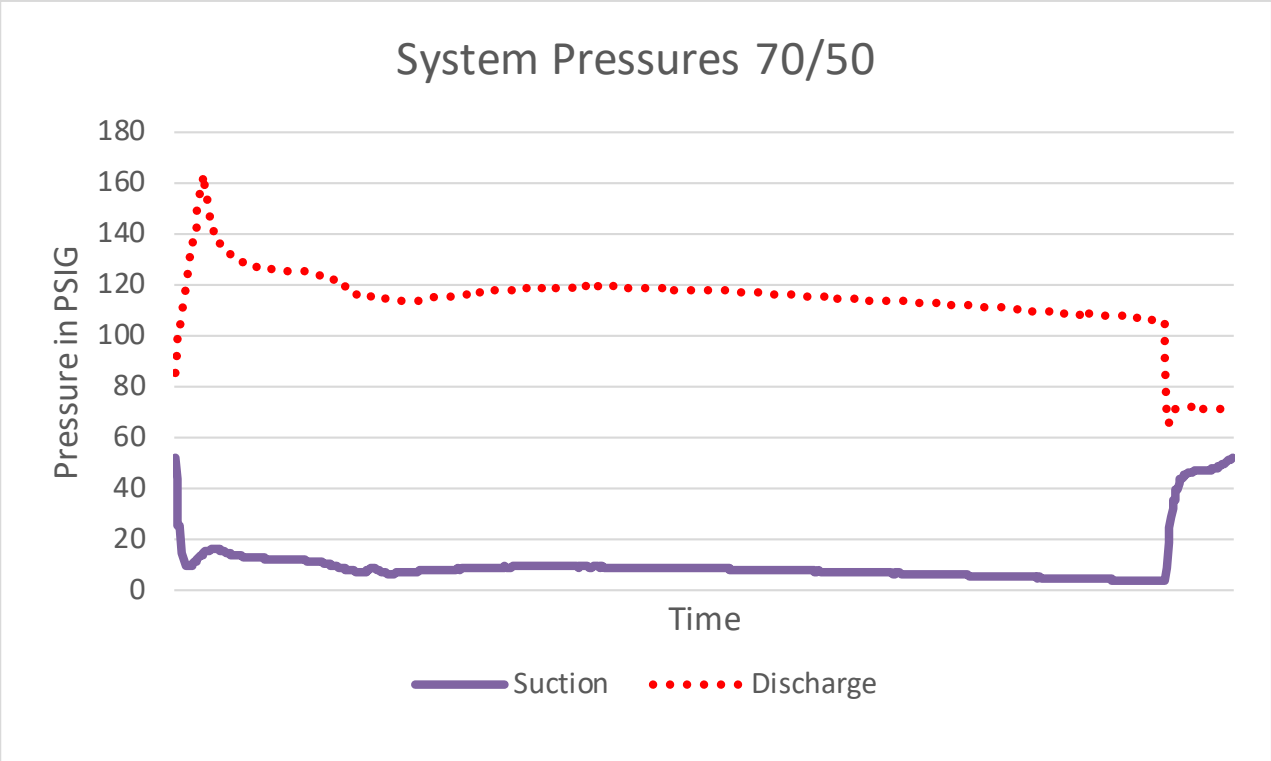

Cycle Time: 13 - 14 minutes

Unit Current Draw: 6in Freeze Mode 6 - 7

Maximum Suction Pressure in Harvest: 52 - 54PSIG

Suction pressure just before harvest. 3 - 4 PSIG

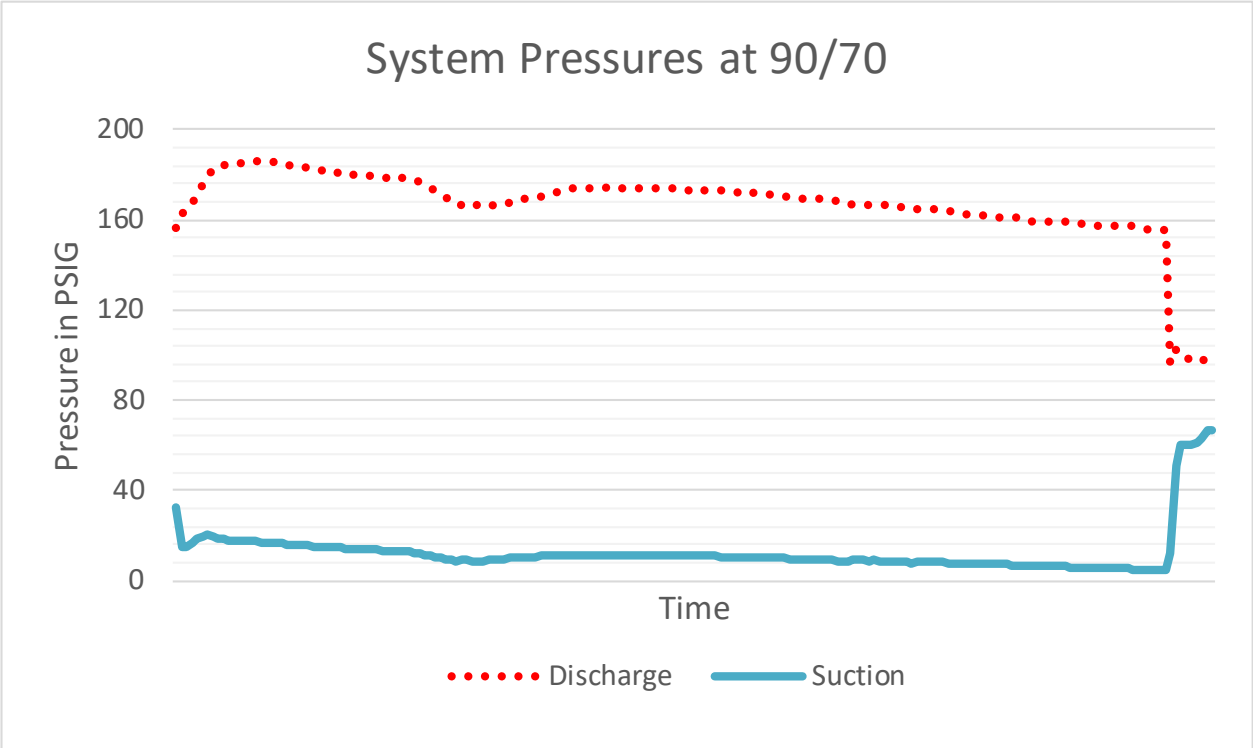

Cycle Time: 16 - 17 minutes

Unit Current Draw: in Freeze Mode 6.4 - 7

Maximum Suction Pressure in Harvest: 65 - 68 PSIG

Suction pressure just before harvest: 4 - 5 PSIG

Symptom	Possible Cause	Probable Correction
No ice in bin	Unplugged or loose plug in outlet	Check, if plug is loose in outlet have outlet replaced
	Unit switched off	Remove front panel, confirm master switch is in the ON position
	No water to unit, sump not filling	Check for water filter plugged up, replace if necessary
		Check for water interruption at site
	Inlet water solenoid valve not opening	Check coil of valve, check for voltage to valve. Replace if it will not open with full voltage.
	No water over evaporator plate, sump is full	Check pump for voltage to it during freeze, if full voltage, and water in sump, check for blockage of water to pump. If no blockage and full voltage, replace pump. If in freeze, and no voltage and Anti Slush light is not on, replace controller.
	Inlet water valve leaks thru	Check inlet water valve, It must shut off completely when off. Replace if it leaks by.
	False bin full	Check flap, it must be in the open position or the unit will not operate
		Check flap / curtain switch. It must be open when flap is open. Replace if it does not react to the flap magnet.
	Tripped breaker	Check for electrical short in unit.
	Open fuse in unit	Slide out electrical box and check fuse. If open, check for burnt or shorted controller.
	High pressure control open	If water cooled, check that water supply has not been interrupted. If air cooled, fan motor must operate or high pressure control will open.
	Fan not turning during freeze mode	Check fan motor windings, fan motor for free rotation, system charge, check fan pressure control cut in
	No refrigeration	Compressor off, check for overheating.
		Compressor not starting. Check starting components. Check compressor windings.
		No power to compressor. Check contactor. Check power to contactor coil, if none and water pump is working, replace controller.
		Low charge or TXV superheat too high. Add charge to confirm if charge or TXV is the issue.
	Evaporator plate is warm in freeze mode	Hot gas valve not shutting off or leaking by.

Symptom	Possible Cause	Probable Correction
No ice in bin	Ice is made, but does not release	Check hot gas valve for proper operation
	Evaporator surface damaged	Check plating and grid condition, replace evaporator if damaged
Ice is poorly formed, does not release as a group	Fouled water distributor	Clean water distributor
	Cube size too small	Adjust cube size
	Refrigeration uneven	Check refrigerant charge and TXV superheat
		Check for evaporator tube separation
	Unit using timed cycles	Evaporator thermistor out of range. Check controller for all cube size and harvest time lights flashing. See page 24.
Ice too large or too small	Cube size out of adjustment	Adjust cube size.
	Unit using timed cycles	Evaporator thermistor out of range. Check controller for all cube size and harvest time lights flashing. See page 24.
Water leak from cabinet	Check drain tubing	Correct leaking tubing
Water backs up into bin during harvest	External drain tubing has trap or not vented	Correct drain tubing configuration
Excessive noise	Tubing contact	Check for tubes rattling and panels not tight
	Fan blade out of balance	Replace fan assembly
	Water pump worn	Replace pump
	Compressor noisy	Replace compressor
Slow or Low production	Air filter is dirty	Clean air filter
	Condenser is dirty	Check and clean condenser
	Room and/or Water Temperature too high	Maximum production will be achieved at 70°F / 21°C air and 50° / 10°C water
	Restricted air flow to unit	Check and remove air flow restrictions
	High pressure control cycling unit	Unit will be off for significant time before control resets. Check for cause of high pressure.
Sump water hot	Connected to hot water	Connect to cold, potable water.
	Hot gas valve leaking by	Replace hot gas valve
Unit cycles off and restarts	Loose electrical connection	Check power cord and outlet. Outlet may be worn, replace worn outlet.

Note: A damaged power cord must be replaced by the identical, OEM service part.

Access to many components will require removal of the back panel.

Water Pump

1. Disconnect electrical power.

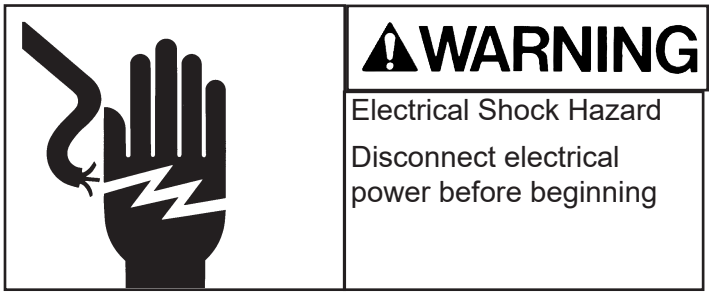

2. Drain the water system.
3. Remove the upper back panel.

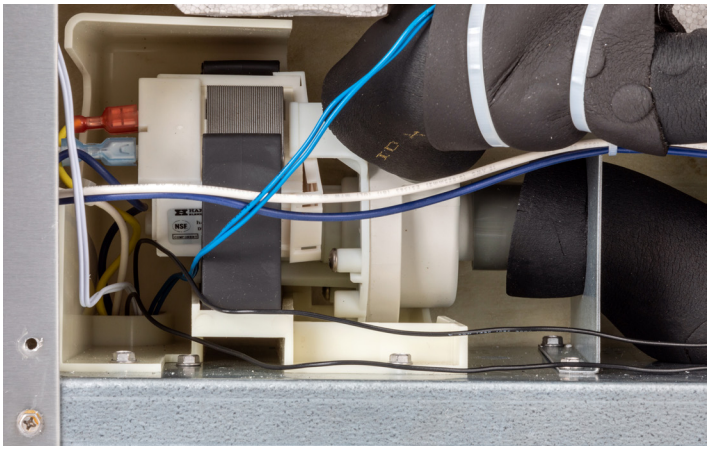

4. Pull the inlet and outlet hoses from the water pump.
5. Twist the pump out of its rubber mount.
6. Disconnect the wires from the pump and remove the pump from the unit.

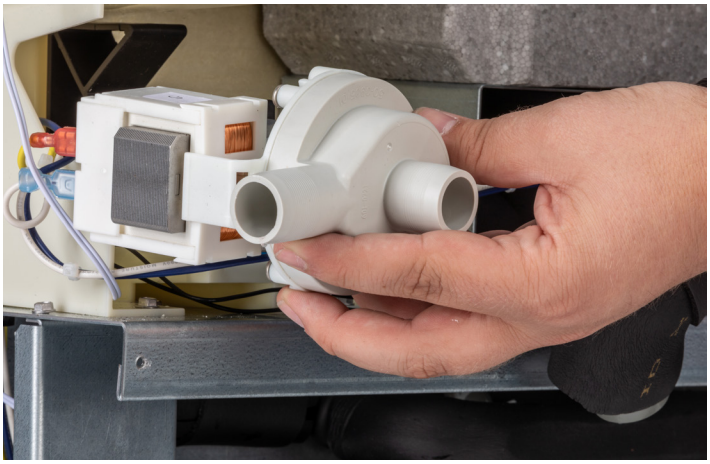

Inlet Water Solenoid Valve

1. Disconnect electrical power

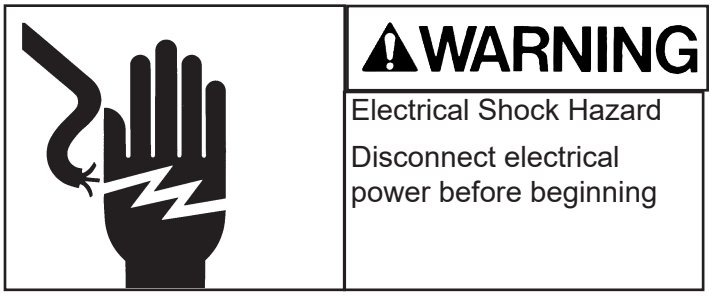

2. Shut off the water supply to the unit
3. Remove the upper back panel
4. Disconnect water inlet from valve.
5. Disconnect water outlet from valve.
6. Remove two screws holding valve to unit.
7. Disconnect electrical wires from valve and remove valve from unit.

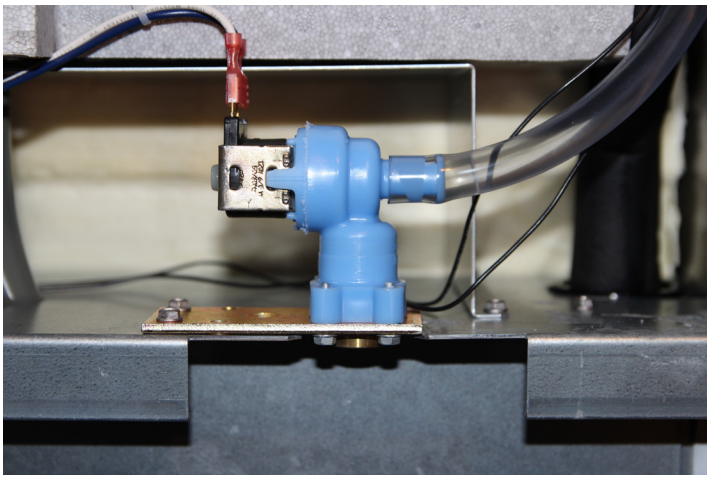

Controller and other electrical

Access to the controller is by removing a retaining screw and sliding the electrical box out.

All service in this area begins with disconnecting electrical power.

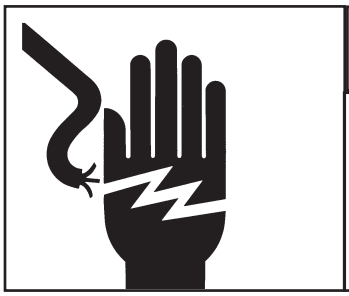

⚠WARNING

Electrical Shock Hazard

Disconnect electrical power before beginning

Controller

1. Pull the electrical box out.
2. Remove the two screws at the front and lift the box cover off the box.
3. Disconnect all electrical wires to the controller.

Note: Document where they go or be sure you have a wiring diagram to note their locations.

4. Squeeze the stand offs together to release them from the electrical box cover.
5. Remove the controller from the unit.

Note: The replacement controller ships at a mid cube size setting, adjust cube size as needed for the unit being serviced.

Master Switch

1. Pull the electrical box out.
2. Remove two screws at the front and lift the box cover off the box.
3. Disconnect all electrical wires to the switch.
4. Note: Document where they go or be sure you have a wiring diagram to note their locations.
5. Squeeze the switch snaps to release it from the box cover.
6. Remove the switch from the unit.

Contactor

1. Pull the electrical box out.
2. Remove wires from contactor.
3. Remove screws holding contactor to box and pull contactor from unit.

Transformer

1. Pull the electrical box out.
2. Remove wires from transfomer.
3. Remove screws holding transformer to box and remove transformer from unit.

PTCR (CU2724-1 only)

1. Pull the electrical box out.
2. Remove wires from PTCR
3. Release from bracket and pull it out of the unit.

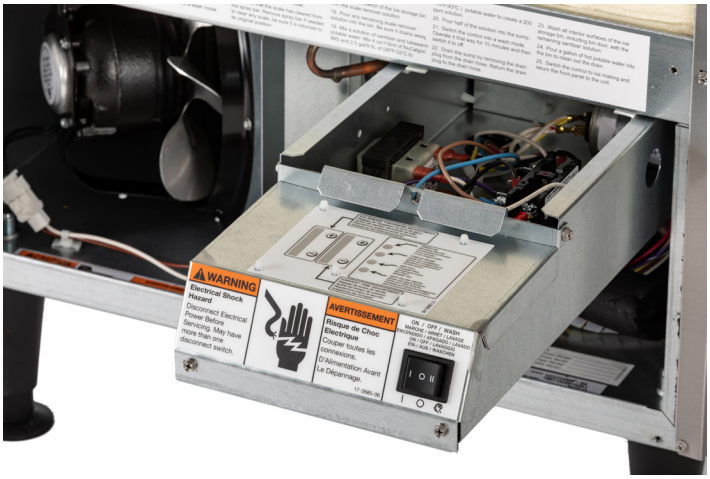

Compressor: Test First

Failure to start.

Check voltage to compressor at the contactor. Compare the idle voltage (compressor off) to the active voltage (compressor starting). The supply voltage must not be less than the lowest rated voltage for the ice machine. If the voltage is correct, proceed to the next step.

Check starting components. The UC2724 model uses a PTCR to cut power to the start winding after the compressor has started. Check the PTCR for resistance. The resistance check must be when the PTCR is at room temperature – any temperature between 50 and 100. At that temperature resistance should be very low between 25 and 50 ohms. Also check resistance to ground, it should be infinite. If the PTCR is good, check the compressor windings.

Measure resistance from Common to ground. It should be infinite. Measure resistance from Common to Run – compare to the chart. Measure resistance from Common to Start – compare to the chart.

Note: Chart referenced is from compressor mfg.

Compressor check for high amp draw. Measure amp draw of starting circuit. If it does not drop off immediately after start up, the PTCR should be replaced. It is not practical to check a PTCR for resistance at high temperatures as the resistance drops very fast as the PTCR's temperature falls. If the compressor is drawing excessive amps but is operating, the run capacitor may be open.

Disconnect electrical power, discharge the capacitor and measure its resistance. If open, replace it. If shorted to ground, replace it.

Any time the compressor is replaced, the PTCR and run capacitor should also be replaced, or if the model was equipped with a potential relay, start capacitor and run capacitor, those should be replaced with the compressor. Most Scotsman service compressors include those parts.

Remove and Replace

WARNING

Electrical Shock Hazard

Disconnect electrical power before beginning

1. Disconnect Electrical Power
2. Remove front and lower back panels.
3. Remove top and right side panels.
4. Recover refrigerant
5. Remove electrical connections from compressor
6. Unsweat process, suction and discharge tubes from compressor.
7. Remove fasteners holding compressor to base and lift compressor from unit.
8. Confirm new compressor is the correct one for the unit.
9. Remove old dryer from unit.
10. Place in unit.
11. Braze the suction, discharge and process tubes onto the new compressor using the methods and procedures of the refrigeration trade for that work.
12. Braze a new dryer into the liquid line where the original one was.
13. Evacuate the system to 300 microns.
14. Weigh in the nameplate charge.
15. Attach the electrical connections to the compressor.
16. Restart and test for proper operation.

Condenser Fan Motor

The condenser fan motor only operates when the fan pressure control closes to connect power to it. Before changing a fan that does not turn, check for power to it first.

To replace:

1. Disconnect electrical power to the unit.

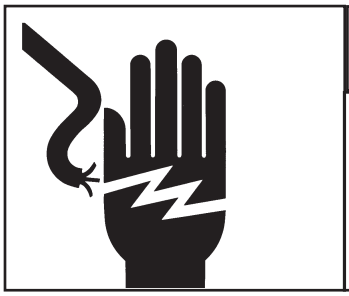

⚠WARNING

Electrical Shock Hazard

Disconnect electrical power before beginning

2. Remove the front and left side panels.
3. Disconnect the quick connect to the fan motor.
4. Use a long screwdriver and the slots on the side to remove the hard to reach screws holding the plastic venturi to the condenser shroud.
5. Pull the fan motor and venturi out and remove the fan motor and assembly from the unit.

Note: The fan motor is only available with the blade and venturi.

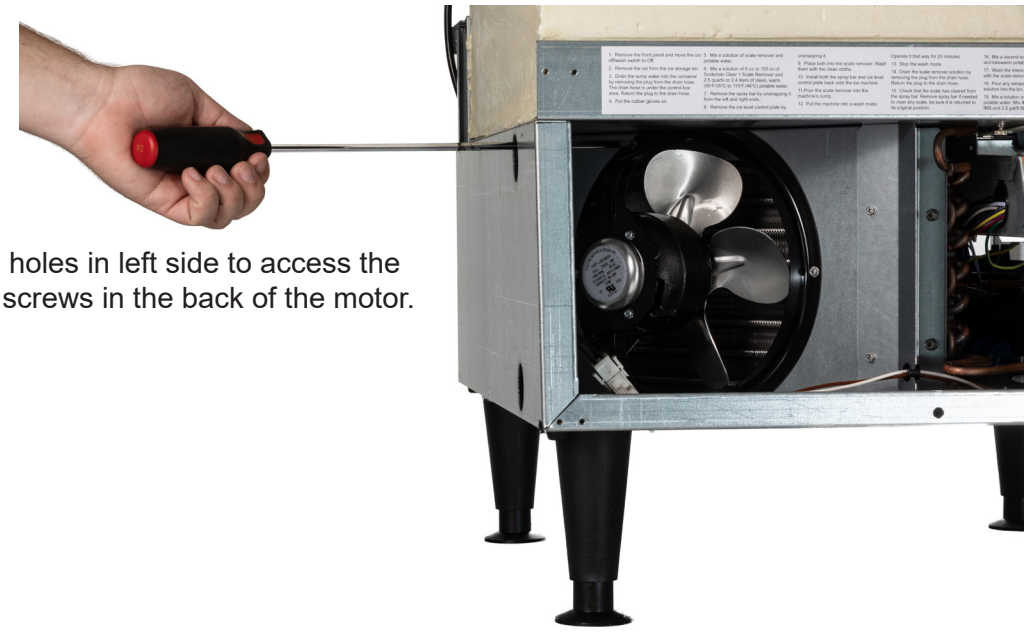

Use holes in left side to access the two screws in the back of the motor.

Thermistors

Note: Thermistors sold as a pair. Replacement requires removal of front, upper back, and side panels.

- Blue wires to pump hose.
- Black wires to evaporator outlet.

All service in this area begins with disconnecting electrical power.

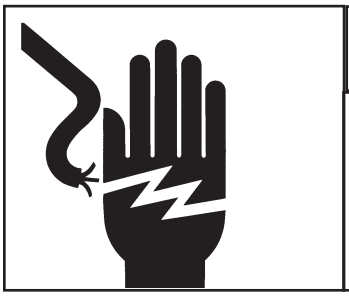

⚠WARNING

Electrical Shock Hazard

Disconnect electrical power before beginning

1. Remove front panel.
2. Pull electrical box out.
3. Remove electrical box cover.
4. Disconnect thermistor set from controller.
5. Trace wires to each thermistor.
6. Remove corner insulation block on the tubing side of the evaporator.
7. Strip back tubing insulation to expose joints.
8. Remove evaporator thermistor from tubing.
9. Remove insulation covering water temperature thermistor.
10. Pull thermistor out of the hose.
11. Insert new thermistor (with blue wire) into hose. Allow space between tip of thermistor and hose wall.
12. Route wires to electrical box and connect to controller on the four pin terminal.

Evaporator Temperature Thermistor Location

Water Temperature Thermistor Location

Flap or Curtain Switch

Flap Switch (Curtain Switch in Wiring Diagram)

1. Remove front panel.

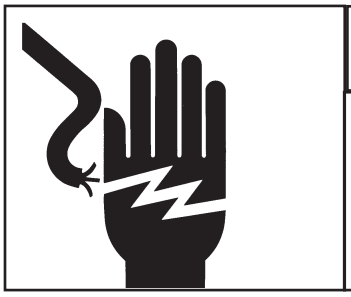

⚠WARNING

Electrical Shock Hazard

Disconnect electrical power before beginning

2. Switch unit off.
3. Pull electrical box out.
4. Remove electrical box cover.
5. Disconnect switch wire from controller.
6. Remove top and right side panels.
7. Remove rubber plug from over switch.
8. Pry switch out of it s position in the foam block.
9. Install new switch.
10. Reinstall rubber plug, Secure with tape.
11. Route wire to controller and attach to the two pin terminal.

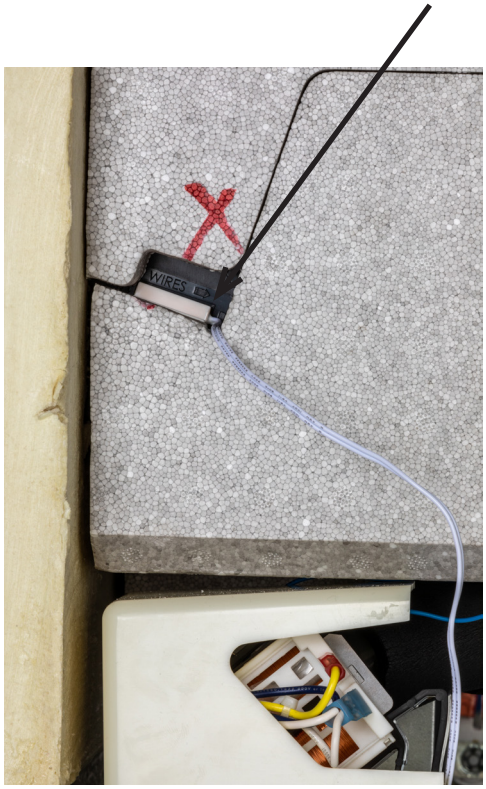

Hot Gas Valve and TXV

As with other components, replacement of either of these two parts requires removal of the back panel.

TXV

1. Disconnect electrical power.

⚠WARNING

Electrical Shock Hazard

Disconnect electrical power before beginning

2. Recover refrigerant.
3. Remove back panels.
4. Remove insulation covering expansion valve and bulb.
5. Remove strap securing bulb to suction line.
6. Unsweat the expansion valve from the liquid line. Remove it.
7. Unsweat the drier from the liquid line. Remove it.
8. Connect nitrogen to discharge access valve.
9. Immediately place new valve in ice machine.
10. Open nitrogen bottle at very low pressure and braze expansion valve inlet and outlet joints together. Braze new drier into system.
11. Shut off nitrogen.
12. Evacuate to at least 300 microns.
13. Weigh in the nameplate charge. Check for leaks.
14. Attach bulb to suction line. Position at 4 or 8 o'clock on the tube. Secure tightly but do not crush the bulb with the strap.
15. Reattach valve and bulb insulation.
16. Reconnect electrical power.

Hot Gas Valve

1. Disconnect electrical power.

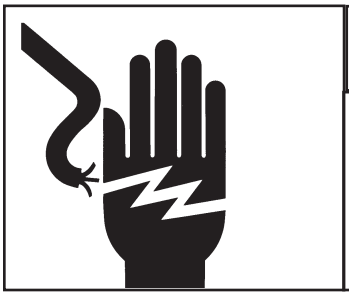

⚠WARNING

Electrical Shock Hazard

Disconnect electrical power before beginning

Location of Hot Gas Valve

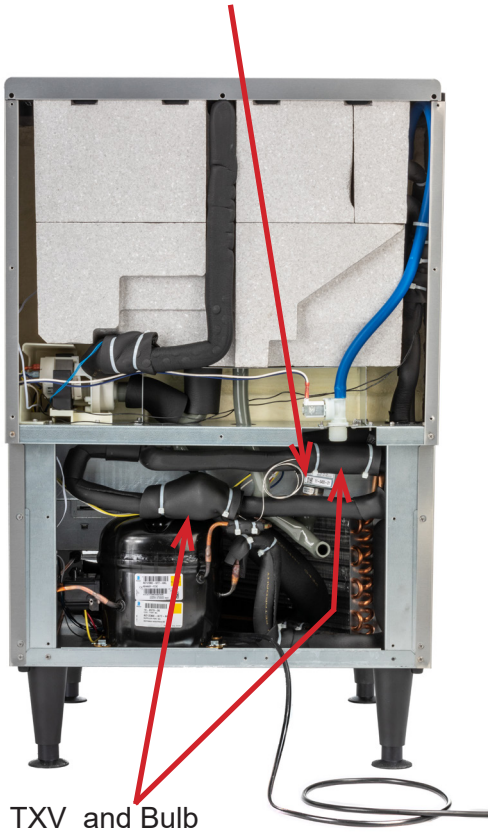

TXV and Bulb Locations

2. Recover refrigerant.
3. Remove lower back panel.
4. Unplug the electrical connection from the hot gas valve.

Note: Reposition drain tubing, electrical wires, liquid line as needed to avoid damage during brazing.

5. Unsweat the hot gas valve from the tubing. Remove it.
6. Unsweat the drier from the liquid line. Remove it.
7. Connect nitrogen to discharge access valve.
8. Immediately place new valve in ice machine.
9. Open nitrogen bottle at very low pressure and braze hot gas valve inlet and outlet joints together. Braze new drier into system.
10. Shut off nitrogen.
11. Evacuate to at least 300 microns.
12. Weigh in the nameplate charge. Check for leaks.
13. Reattach electrical connection to hot gas valve.
14. Reconnect electrical power.

Evaporator

1. Disconnect electrical power.

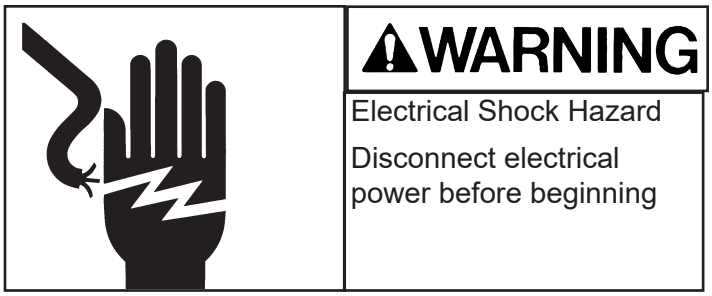

2. Drain water from sump.
3. Remove front, upper back and both side panels.
4. Recover refrigerant.
5. Disconnect water hose to top of evaporator.
6. Remove corner insulation block on the tubing side of the evaporator.
7. Strip back tubing insulation to expose joints.
8. Remove evaporator thermistor from tubing.
9. Unsweat evaporator at exposed joints.
10. Remove two screws at top of evaporator.
11. Lift evaporator up and out of unit.
12. Slide new evaporator into unit.
13. Attach nitrogen bottle to suction tube and purge system with low pressure nitrogen.
14. Braze new evaporator to system.
15. Disconnect nitrogen.
16. Evacuate system to 300 microns.
17. Weigh in nameplate charge.
18. Reinstall two screws at top of evaporator.
19. Reinstall evaporator thermistor.
20. Reinstall corner insulation block.
21. Return tubing insulation and secure with cable ties as needed.
22. Reconnect water hose to top of evaporator.
23. Reconnect electrical power.
24. Restart unit, check operation.
25. Return all panels to their original positions and secure with the original screws.

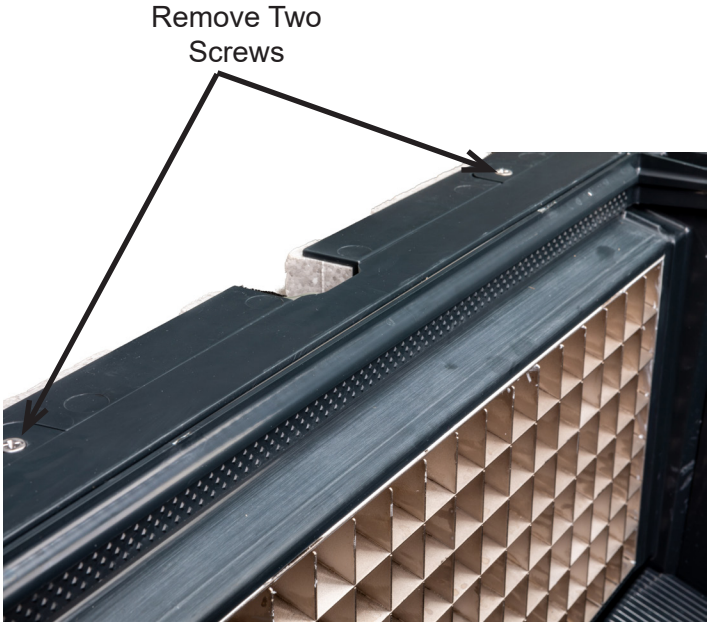

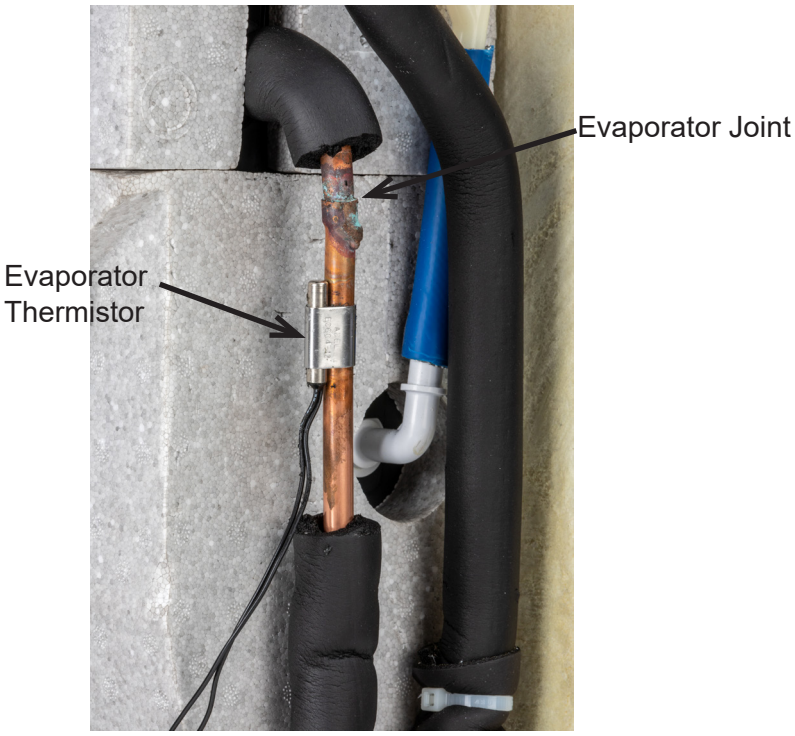

Model	Refrigerant Charge (oz) (R-134a)	Compressor Amps	Superheat, 5 minutes into freeze @70/50 (degrees F.)	Superheat, 5 minutes into freeze @90/70 (degrees F.)
UC2024SA-1A	15	4-5	13-15	9-11
UC2024MA-1A				
UC2024SW-1A	12			
UC2024MW- 1A				
UC2724SA-1A	14	4.2-5	15-17	14-16
UC2724MA-1A				
UC2724SW-1A	11			
UC2724MW-1A				

Model	70/50 Suction Pressure, 5 minutes into freeze (PSIG)	70/50 Discharge Pressure 5 minutes in freeze (PSIG)	90/50 Suction Pressure, 5 minutes into freeze (PSIG)	90/50 Discharge Pressure 5 minutes in freeze (PSIG)
UC2024SA-1A	12	110	12	145
UC2024MA-1A				
UC2724SA-1A				
UC2724MA-1A	9-10	118-122	8-10	160-170
Water Cooled		135		135

Wiring Diagram UC2024

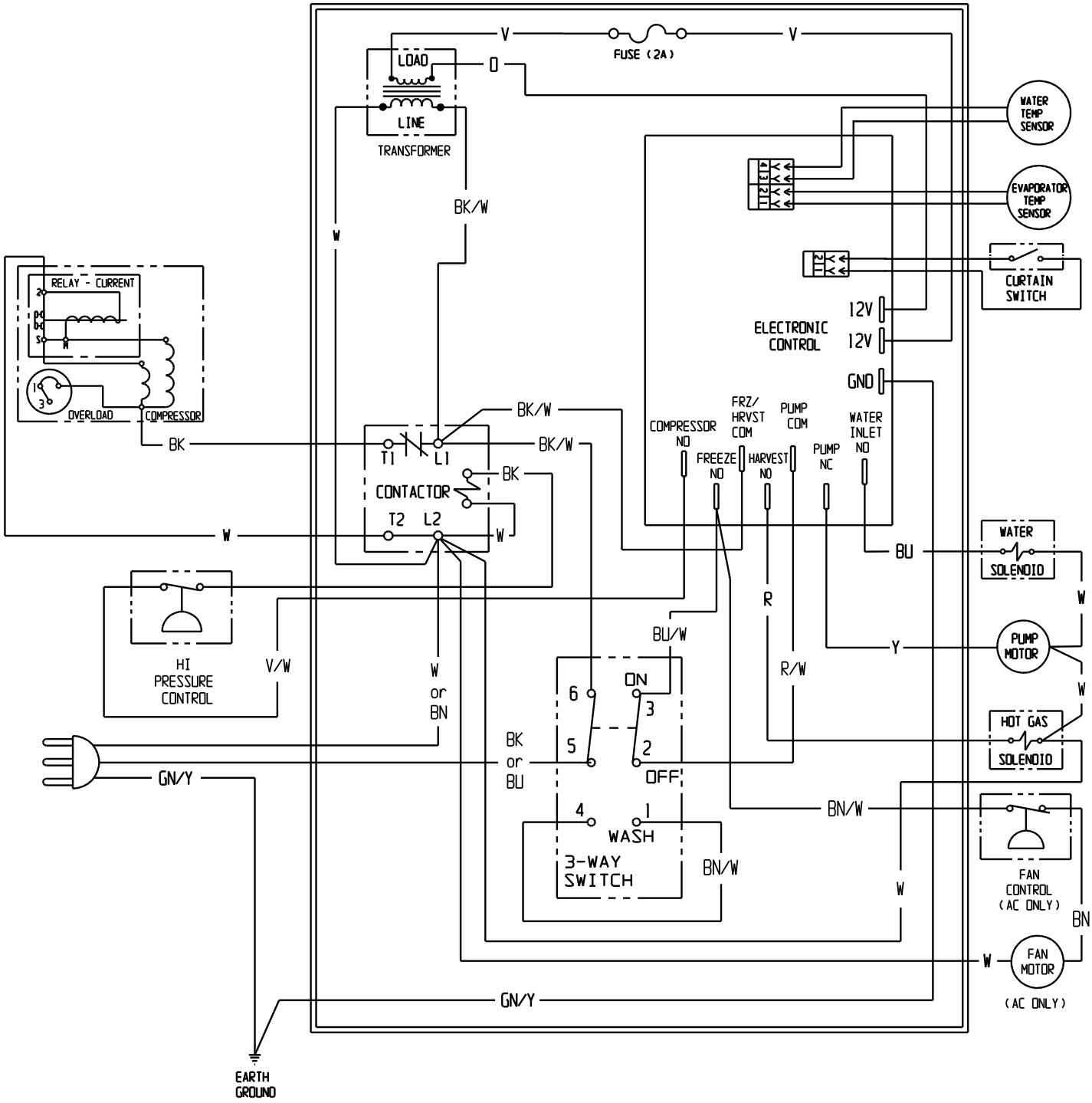

Wiring Diagram UC2724

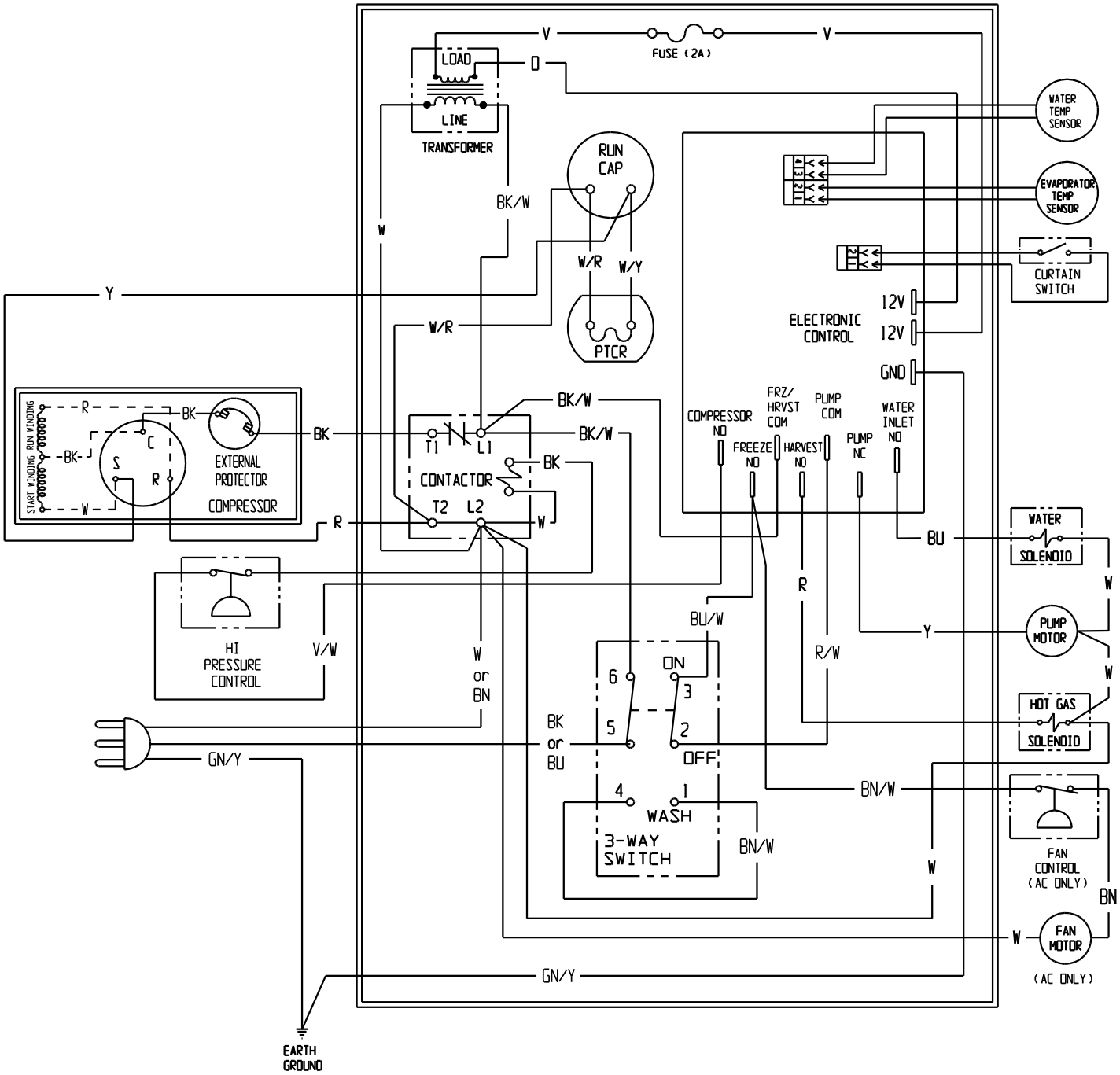

Shown in ice making mode

Wiring Routing

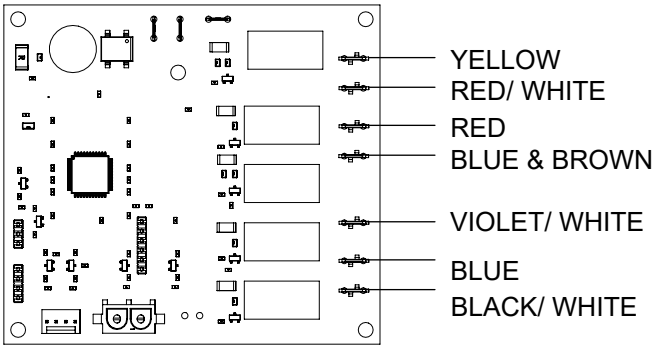

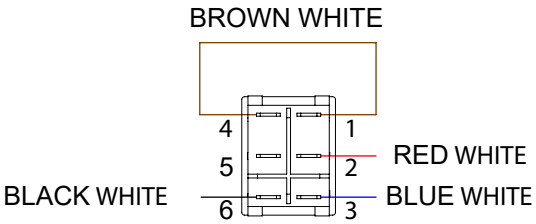

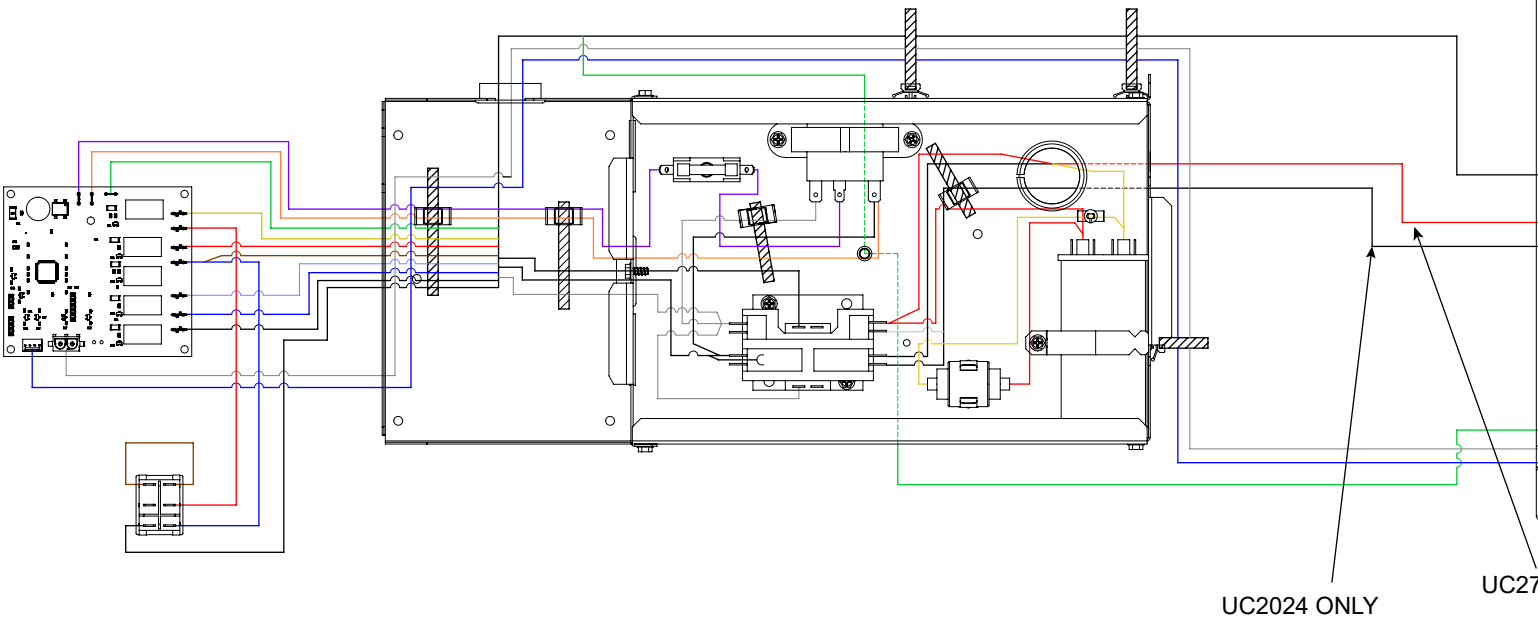

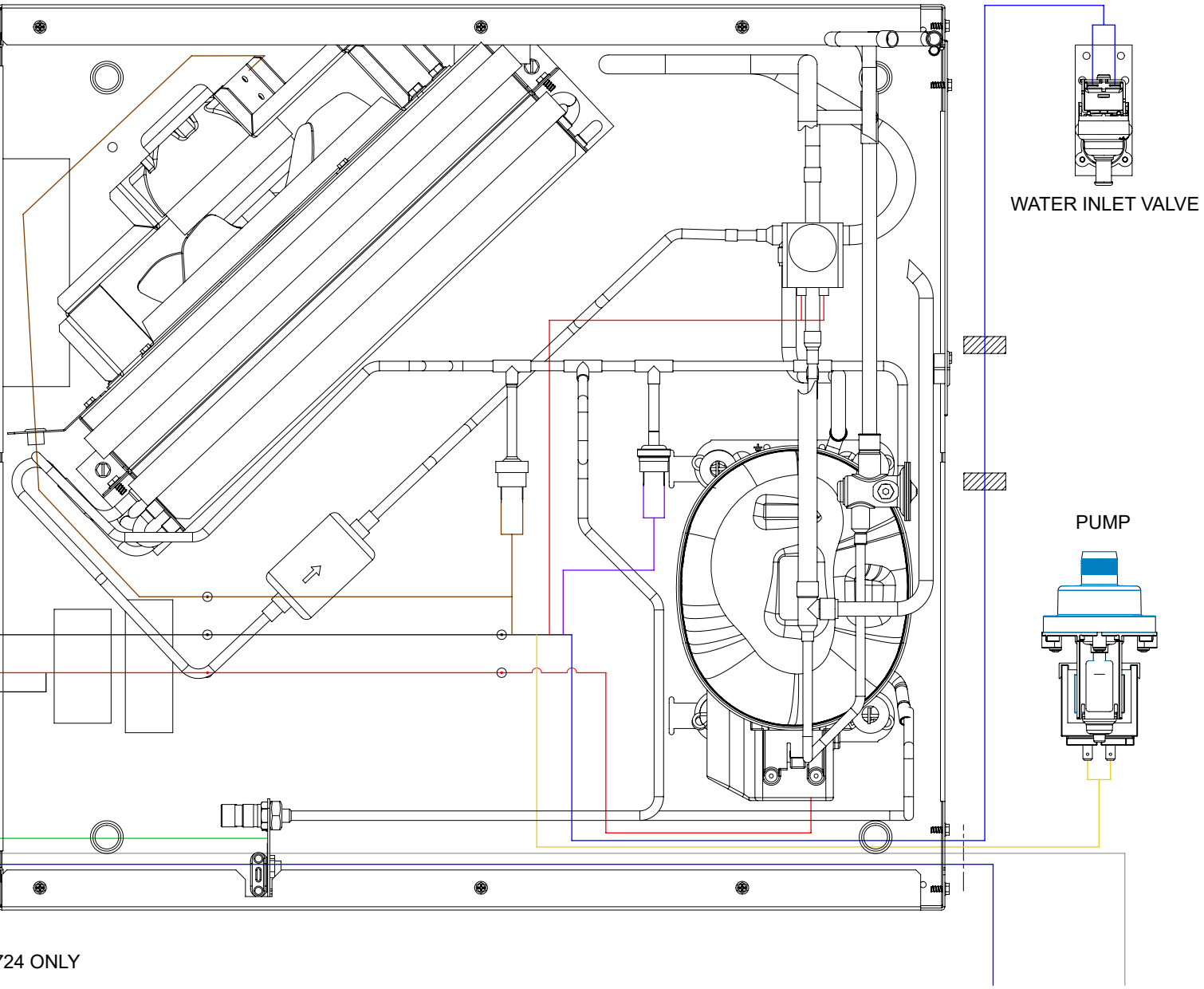

724 ONLY

SCOTSMAN ICE SYSTEMS
101 Corporate Woods Parkway
Vernon Hills, IL 60061
800-726-8762
www.scotsman-ice.com